Kaipara District Council
Unit 6 - The Hub, 6 Molesworth Drive, Mangawhai 0505
buildingsupport@kaipara.govt.nz
(09) 439 3123

BC210608

Alpha ID: 210608
Application Type: Building Consent with PIM
Site Address: 752 Settlement Road Hakaru
Project Description: Proposed Separate Garage/Sleepout
Project Status: Code Compliance Certificate Issued

Creation Date: 03 April 2023

Table of Contents

Lodged Documents

Form 2: Application for Building Consent including PIM 1
PLG 1 Application 6
Record of title - 200139_223_224_20210416.pdf 8
Record of title - 200139_223_plan_20210416.pdf 9
Plans - Utting_BC_Plans.pdf 14
Restricted building work memorandums Owner-builder declaration - memorandum-certificate-of-design-work.pdf 21
Restricted building work memorandums Owner-builder declaration - 13611_CODW_signed_2021-09-03.pdf 27
Supporting documents - 13611_Calcs_2021-09-03_BC_signed.pdf 33
Supporting documents - Watergate_Plus_CodeMark_1002_Rev1_020321_3.pdf 37
Supporting documents - 0949-21_Layout.pdf 43
Supporting documents - 0949-21_PS1.pdf 44
Supporting documents - 764-BRANZ-Appraisal-2021.pdf 46
Supporting documents - authority.pdf 57
Supporting documents - 21150_Lot_3_760_Settlement_Road_Hakarua.pdf 58
Supporting documents - Corrugate_Feb_2010._low_res.pdf 67
Supporting documents - BRANZ_Watergate_Plus_695_0321_6.pdf 69
Supporting documents - DATASHEET_Aluband_v5_0120_4.pdf 77
Supporting documents - BRANZ_Aluband_Window_Flashing_Tape_0321_4.pdf 79
Supporting documents - 13611_PS1_Signed_2021-09-03.pdf 85
Supporting documents - DATASHEET_Thermakraft_215_v6_1119_3.pdf 88
Supporting documents - DATASHEET_Watergate_Plus_v9_0921.pdf 91
Supporting documents - INSTALL_GUIDE_Thermakraft_215_v1_1119_2.pdf 94
Supporting documents - CorrugatedProfile.pdf 97
Supporting documents - INSTALL_GUIDE_Watergate_Plus_v4_0921.pdf 104
Supporting documents - Utting.Kaiwaka.Signed_2021-09-03.pdf 106
Supporting documents - SHADOWCLAD_V2.0321_Cavity-Construction_Installation-Guide.pdf 107
Supporting documents - INSTALL_GUIDE_Aluband_v4_0120_4.pdf 163
Supporting documents - Utting_Bracing_Calcs..pdf 166
Supporting documents - On-site_wastewater_760_Settlement_Rd._Utting.pdf 167
Specifications - specification-244431-spec-2021-09-07_1.pdf 202

Vetting

Request For Further Information - Vetting 1 274

Development Contributions, RMA, PIM

Form 4: Certificate attached to PIM 277
PIM 278

Processing

Request For Further Information 1 281

Building Consent

Form 5: Building Consent 283
Plans_-_210608_PL_ISSUED.pdf 292
Supporting_documents_-_210608_SD_ISSUED.pdf 302
Specifications_-_210608_SP_ISSUED.pdf 427

Inspections

Inspection Report 1 604
Inspection Report 2 - Prepour 607
Inspection Report 3 - Wastepipes - Floor Slab - Framing Pre-wrap 612
Inspection Report 4 625
Inspection Report 5 - Post Wrap Cavity 627
Inspection Report 6 632
Inspection Report 7 - Preline - Post Line 645
Inspection Report 8 - Preline - Internal Membrane - Drainage - Final 650
Inspections Media Album 658

CCC Documents

Minor variations - BC210608_-_Minor_Variation_-_Cladding_Axon_panel_on_cavity_Approved.pdf 667
Miscellaneous documents - top_skirting_in_room_1.jpg.pdf 725
Miscellaneous documents - top_skirting_in_room_2.jpg.pdf 726
Miscellaneous documents - top_skirting_in_room_3.jpg.pdf 727
Miscellaneous documents - top_skirting_in_room_4.jpg.pdf 728
Miscellaneous documents - finishing_trims_interior_bathroom.jpg.pdf 729
Miscellaneous documents - internal_hardware_trim_fitted.jpg.pdf 730
Miscellaneous documents - finsihing_trim_and_door_hardware_garage_to_sleepout.jpg.pdf 731
Miscellaneous documents - finishing_trim_exterior_top_of_cladding_2_build_ground_levels_up.jpg.pdf 732
Miscellaneous documents - finishing_trim_exterior_top_of_cladding_1.jpg.pdf 733
Miscellaneous documents - finishing_trim_exterior_top_of_cladding_3_build_ground_levels_up.jpg.pdf 734
Miscellaneous documents - finishing_trim_exterior_top_of_cladding_4_plus_build_ground_levels_up.jpg.pdf 735
Miscellaneous documents - finishing_trim_to_garage_doors.jpg.pdf 736
Miscellaneous documents - hot_water_cylinder.jpg.pdf 737
G9 Energy works certificate - COCESC_5218.1E243604.pdf 738
Scanned_CCC_Documents_-_210608_Minorvariations_20220404.pdf 739
Scanned_CCC_Documents_-_CCC210608.pdf 797

799
Scanned_CCC_Documents_-_G9Energyworkscertificate-002.pdf 801
Scanned_CCC_Documents_-_Miscellaneousdocuments-001.pdf 802

803
Scanned_CCC_Documents_-_Miscellaneousdocuments-006.pdf 804
Scanned_CCC_Documents_-_Miscellaneousdocuments-010.pdf 805
Scanned_CCC_Documents_-_Miscellaneousdocuments-005.pdf 806
Producer_Statements_4_-_21150_PS4_Lot_3_760_Settlement_Road_Hakarua_20211006-153740-249.pdf 807
Scanned_CCC_Documents_-_Miscellaneousdocuments-011.pdf 812
Scanned_CCC_Documents_-_210456_Asbuilt_20221130.pdf 813
Producer_Statements_4_-_21150_PS4_Lot_3_760_Settlement_Road_Hakarua_20211001-112429-554.pdf 815

820
Scanned_CCC_Documents_-_Miscellaneousdocuments-013.pdf 821
Scanned_CCC_Documents_-_Miscellaneousdocuments-002.pdf 822
Scanned_CCC_Documents_-_Miscellaneousdocuments-007.pdf 823
Scanned_CCC_Documents_-_Miscellaneousdocuments-012.pdf 824
Scanned_CCC_Documents_-_Miscellaneousdocuments-004.pdf 825
Scanned_CCC_Documents_-_Miscellaneousdocuments-009.pdf 826
Scanned_CCC_Documents_-_G9Energyworkscertificate-001.pdf 827
Scanned_CCC_Documents_-_Miscellaneousdocuments-003.pdf 828
Scanned_CCC_Documents_-_Miscellaneousdocuments-008.pdf 829

Code Compliance Certificate

Form 6: Application for Code Compliance Certificate 830
Form 7: Code Compliance Certificate 832

Emails

Email_210608_Re_BC210608_752_Settlement_Road_Hakaru_20210909.pdf 834
Email_210608_Re_BC210608.1_Request_For_Further_Information_-_Ve_20210913.pdf 836
Email_210608_Re_BC210608.1_Form_4_Certificate_attached_to_PIM_-_20210916.pdf 839
Email_210608_BC210608__752_Settlement_Road_Hakaru_20210928.pdf 841
Email_210608_FW_BC210608_Producer_Statement_-__PS4_Lot_3_760_Se_20210930.pdf 842
Email_210608_FW_BC210608_-_Producer_Statement_20220927.pdf 843
Email_210608_FW_BC210608_-_Producer_Statement_20220927_002.pdf 845
Email_210608_Undelivered_Mail_Returned_to_Sender_20221219.pdf 847
Email_210608_BC210608_New_Documents_Uploaded_20230324.pdf 848
Email_210608_BC210608_New_Documents_Uploaded_20230327.pdf 849

Sent Emails

Email_210608_BC210608_752_Settlement_Road_Hakaru_20210909.pdf 850
Email_210608_RE_Re_BC210608_752_Settlement_Road_Hakaru_20210909.pdf 851
Email_210608_BC210608.1_Request_For_Further_Information_-_Vetti_20210909.pdf 852

Email_210608_RE_Re_BC210608.1_Request_For_Further_Information_-_20210913.pdf 854
Email_210608_BC210608_A_new_email_has_been_allocated_to_you_20210913.pdf 855
Email_210608_BC210608_752_Settlement_Road_Hakaru_20210914.pdf 856
Email_210608_Application_Accepted_20210914.pdf 859
Email_210608_BC210608.1_Form_4_Certificate_attached_to_PIM_-_75_20210915.pdf 860
Email_210608_RE_Re_BC210608.1_Form_4_Certificate_attached_to_PI_20210916.pdf 861
Email_210608_BC210608_A_new_email_has_been_allocated_to_you_20210917.pdf 862
Email_210608_BC210608_752_Settlement_Road_Hakaru_20210917.pdf 863
Email_210608_BC210608_A_new_job_for_you_20210917.pdf 865
Email_210608_Specialist_Input_Requested_-_22_Sep_2021_20210922.pdf 866
Email_210608_BC210608.1_Request_For_Further_Information_-_752_S_20210924.pdf 868
Email_210608_RE_BC210608__752_Settlement_Road_Hakaru_20210928.pdf 869
Email_210608_BC210608.1_PIM_-_752_Settlement_Road_Hakaru_20210928.pdf 870
Email_210608_BC210608.1_Form_5_Building_Consent_-_752_Settlemen_20210929.pdf 871
Email_210608_BC210608_Inspection_Report_20211006.pdf 872
Email_210608_BC210608_Inspection_Report_20211006_002.pdf 873
Email_210608_BC210608_Inspection_Report_20220518.pdf 874
Email_210608_BC210608_Inspection_Report_20220708.pdf 875
Email_210608_BC210608_Inspection_Report_20220712.pdf 876
Email_210608_BC210608_Inspection_Report_20220915.pdf 877
Email_210608_BC210608_A_new_email_has_been_allocated_to_you_20220930.pdf 878
Email_210608_BC210608_A_new_email_has_been_allocated_to_you_20220930_002.pdf 879
Email_210608_BC210608_Inspection_Report_20221117.pdf 880
Email_210608_BC210608_Inspection_Report_20221219.pdf 881
Email_210608_BC210608_A_new_email_has_been_allocated_to_you_20221220.pdf 882
Email_210608_BC210608_A_new_email_has_been_allocated_to_you_20230324.pdf 883
Email_210608_BC210608_752_Settlement_Road_Hakaru_20230326.pdf 884
Email_210608_Online_Code_Compliance_Certificate_Application_20230327.pdf 885
Email_210608_BC210608_Form_7_Code_Compliance_Certificate_-_752__20230327.pdf 886

Files that could not be compiled and are not attached to this document

Supporting documents - FS-200139_Flood_Assessment_20200626.pdfFS-200139_Flood_Assessment_20200626.pdf

Date Submitted: Tuesday, 07 September 2021

Form 2
Application for project information memorandum and/or building consent

Section 33 or section 45, Building Act 2004

The building

Street address of building:	752 Settlement Road Northland 0975
Legal description of land where building is located:	Lot 3, DP560279, Ct988296
Building name:	Main Building
Location of building within site/block number:	752 Settlement Road Northland 0975
Number of levels:	No information provided
Level/unit number:	No information provided
Area:	Total: 96.00 m2, Change: 96.00 m2
Current, lawfully established, use:	7.0.1 Outbuildings has 1 occupant
Year first constructed:	2021

The owner

Name of owner:	Gina Utting
Mailing address:	752 Settlement Road Northland 0975
Street address/registered office:	No information provided
Phone number:	Landline: 0212670724 Mobile: N/A
Daytime:	Landline: 0212670724 Mobile: N/A
After hours:	Landline: 0212670724 Mobile: N/A
Facsimile number:	No information provided
Email address:	ginautting@gmail.com
Website:	No information provided

The following evidence of ownership is attached to this application:

1. 200139_223_224_20210416.pdf (131.53K)
2. 200139_223_plan_20210416.pdf (555.11K)

Agent

Name of agent:	Russell Swain			
Contact person:	Russell Swain			
Mailing address:	33 Aragon Ave Glendowie Auckland 1071			
Street address/registered office:	N/A			
Phone number:	Landline:	64212519309	Mobile:	0212519309
Daytime:	Landline:	64212519309	Mobile:	0212519309
After hours:	Landline:	64212519309	Mobile:	0212519309
Facsimile number:	No information provided			
Email address:	russellswain@habitatdesign.co.nz			
Website:	No information provided			
Relationship to owner:	Application made on owners behalf			

First point of contact for communications with the council/building consent authority:

Full name:	Russell Swain
Mailing address:	33 Aragon Ave Glendowie Auckland Auckland 1071
Phone number(s):	64212519309
Facsimile number(s):	N/A
Email address(es):	russellswain@habitatdesign.co.nz

Application

I request that you issue a building consent for the building work described in this application.

Signature of agent on behalf of and with the authority of the owner:

RUSSELL SWAIN

Date: 7 Sep 2021

space for council use

Application Type	Building Consent only
Reference Key:	40615441CQ
Name:	Russell Swain
Application Role:	Agent

The project

Description of the building work:
Proposed separate garage/sleepout.

Will the building work result in a change of use of the building?	No
Intended life of the building if less than 50 years:	50 years
List building consents previously issued for this project (if any):	No information provided
Estimated value of the building work on which the building levy will be calculated (including goods and services tax):	No information provided

Restricted building work

Will the building work include any restricted building work? Yes

If Yes, provide the following details of all licensed building practitioners who will be involved in carrying out or supervising the restricted building work:

Name	Russell Swain
Licensing class	Design
Licensed building practitioner number (or registration number if treated as being licensed under section 291 of Act)	BP113899

Building consent

The following plans and specifications are attached to this application:
1. Utting_BC_Plans.pdf (6.93M)
2. specification-244431-spec-2021-09-07_1.pdf (476.20K)

The building work will comply with the building code as follows:

Main Building	
B1 - Structure	AS1
B2 - Durability	AS1
E1 - Surface Water	AS1
E2 - External Moisture	AS1
E3 - Internal Moisture	AS1
F7 - Warning Systems	AS1
G4 - Ventilation	AS1
G9 - Electricity	AS1
G12 - Water Supplies	AS1
G13 - Foul Water	AS1

H1 - Energy Efficiency	AS1
Waiver / Modification Required:	N/A

Compliance schedule

There are no specified systems in the building.

Attachments

The following documents are attached to this application:

Plans and specifications

1. Utting_BC_Plans.pdf (6.93M)
2. specification-244431-spec-2021-09-07_1.pdf (476.20K)

Record of title

1. 200139_223_224_20210416.pdf (131.53K)
2. 200139_223_plan_20210416.pdf (555.11K)

Restricted building work memorandums / Owner-builder declaration

1. memorandum-certificate-of-design-work.pdf (720.54K)
2. 13611_CODW_signed_2021-09-03.pdf (775.24K)

Supporting documents

1. 13611_Calcs_2021-09-03_BC_signed.pdf (469.22K)
2. Watergate_Plus_CodeMark_1002_Rev1_020321_3.pdf (314.60K)
3. 0949-21_Layout.pdf (156.16K)
4. 0949-21_PS1.pdf (58.09K)
5. 764-BRANZ-Appraisal-2021.pdf (726.15K)
6. authority.pdf (125.73K)
7. 21150_Lot_3_760_Settlement_Road_Hakarua.pdf (0.96M)
8. Corrugate_Feb_2010._low_res.pdf (566.54K)
9. BRANZ_Watergate_Plus_695_0321_6.pdf (472.04K)
10. DATASHEET_Aluband_v5_0120_4.pdf (611.50K)
11. BRANZ_Aluband_Window_Flashing_Tape_0321_4.pdf (442.49K)
12. 13611_PS1_Signed_2021-09-03.pdf (1.46M)
13. DATASHEET_Thermakraft_215_v6_1119_3.pdf (481.25K)
14. DATASHEET_Watergate_Plus_v9_0921.pdf (939.86K)
15. INSTALL_GUIDE_Thermakraft_215_v1_1119_2.pdf (443.94K)
16. CorrugatedProfile.pdf (956.54K)
17. INSTALL_GUIDE_Watergate_Plus_v4_0921.pdf (881.81K)

18. FS-200139_Flood_Assessment_20200626.pdf (4.97M)
19. Utting.Kaiwaka.Signed_2021-09-03.pdf (828.40K)
20. SHADOWCLAD_V2.0321_Cavity-Construction_Installation-Guide.pdf (2.43M)
21. INSTALL_GUIDE_Aluband_v4_0120_4.pdf (810.70K)
22. Utting_Bracing_Calcs..pdf (1.41M)
23. On-site_wastewater_760_Settlement_Rd._Utting.pdf (6.54M)

Building Consent Application: 40615441CQ

Date Submitted: Tuesday, 07 September 2021

FORM PLG 1

National Environmental Standard (NES) for Assessing and Managing Contaminants in Soil to Protect Human Health

For assistance in answering these questions please refer to (PLG 1A)

Please note that any inaccuracies may result in the applicant being in breach of the Resource Management Act 1991 and/or exposed to liability if the site is subsequently found to be contaminated, including being liable for remedial works.

Is the building work and all associated activities:

Changing the use of the land? **NO**

(Please note that "changing the use of the land" includes erecting a dwelling on an area of land which previously had no dwelling erected upon it.)

Disturbing soil? **NO**

(more than 25m3 per 500m2 of land) or removing soil? (more than 5m3 per 500m2 of land) (e.g.: foundations, on-site effluent treatment and disposal systems, wells or bores)

For more information on this process please contact the Duty Planner on 09 439 3123 or go the Ministry for the Environment website: http://www.mfe.govt.nz/laws/standards/contaminants-in-soil/

Signature

The name below as AGENT has the authority for the application to proceed to processing and accept the associated charges.

Signed By:

Russell Swain

7 Sep 2021

The Agent will be the first point of contact for communications with the Council/Building Consent authority regarding this application / building work and will receive all correspondence including all invoices.

TA Approvals

Territorial Authority	Kaipara District Council TA Certification Division	**TA Reference**	RM 200139
Survey Number	LT 560279	**Survey Purpose**	LT Subdivision
Surveyor Reference	ROGERS - 2889	**Land District**	North Auckland
Surveyor	Adam Paul Stanley Booth		
Surveyor Firm	Pacific Coast Surveys Limited (Mangawhai)		
Dataset Description	Lots 1 - 3 Being a Subdivision of Allotment 310 Parish of Kaiwaka		

TA Certificates

I hereby certify that plan LT 560279 was approved by the Kaipara District Council pursuant to section 223 of the Resource Management Act 1991 on the 16th day of April 2021 ☑

Pursuant to Section 224(c) Resource Management Act 1991 I hereby certify that some of the conditions of the subdivision consent have been complied with to the satisfaction of the Kaipara District Council and that a consent notice has been issued in respect of those conditions that have not been complied with. Dated this 16th day of April 2021 ☑

Signature

Signed by Dina Tetzner, Authorised Officer, on 16/04/2021 04:08 PM

Receipt Information

Transaction Receipt Number	14263952
Signing Certificate (Distinguished Name)	Tetzner, Dina
Signing Certificate (Serial Number)	1603484926
Signature Date	16/04/2021

***** End of Report *****

© Copyright: Land Information New Zealand

Title Plan - LT 560279

Survey Number	LT 560279
Surveyor Reference	ROGERS - 2889
Surveyor	Adam Paul Stanley Booth
Survey Firm	Pacific Coast Surveys Limited (Mangawhai)
Surveyor Declaration	

Survey Details

Dataset Description	Lots 1 - 3 Being a Subdivision of Allotment 310 Parish of Kaiwaka		
Status	Initiated		
Land District	North Auckland	**Survey Class**	Class B
Submitted Date		**Survey Approval Date**	
		Deposit Date	

Territorial Authorities

Kaipara District

Comprised In

RT NA42B/368

Created Parcels

Parcels	Parcel Intent	Area	RT Reference
Lot 1 Deposited Plan 560279	Fee Simple Title	1.2651 Ha	988294
Lot 2 Deposited Plan 560279	Fee Simple Title	2.5745 Ha	988295
Lot 3 Deposited Plan 560279	Fee Simple Title	0.3911 Ha	988296
Area A Deposited Plan 560279	Covenant - Land		
Area B Deposited Plan 560279	Covenant - Land		
Area C Deposited Plan 560279	Covenant - Land		
Area D Deposited Plan 560279	Covenant - Land		
Area E Deposited Plan 560279	Covenant - Land		
Total Area		4.2307 Ha	

Schedule / Memorandum

Land Registration District	Survey Number
North Auckland	**LT 560279**

Territorial Authority (the Council)

Notes

Last Edited: 17 Mar 2021 10:48:32

AREA MARKED 'A' IS TO BE SUBJECT TO CONSERVATION COVENANTS
AREAS MARKED 'B & C' ARE TO BE SUBJECT TO LAND COVENANTS CREATED BY CONSENT NOTICE - SCREEN PLANTING
AREAS MARKED 'D & E' ARE TO BE SUBJECT TO LAND COVENANTS CREATED BY CONSENT NOTICE - BUILD SITES

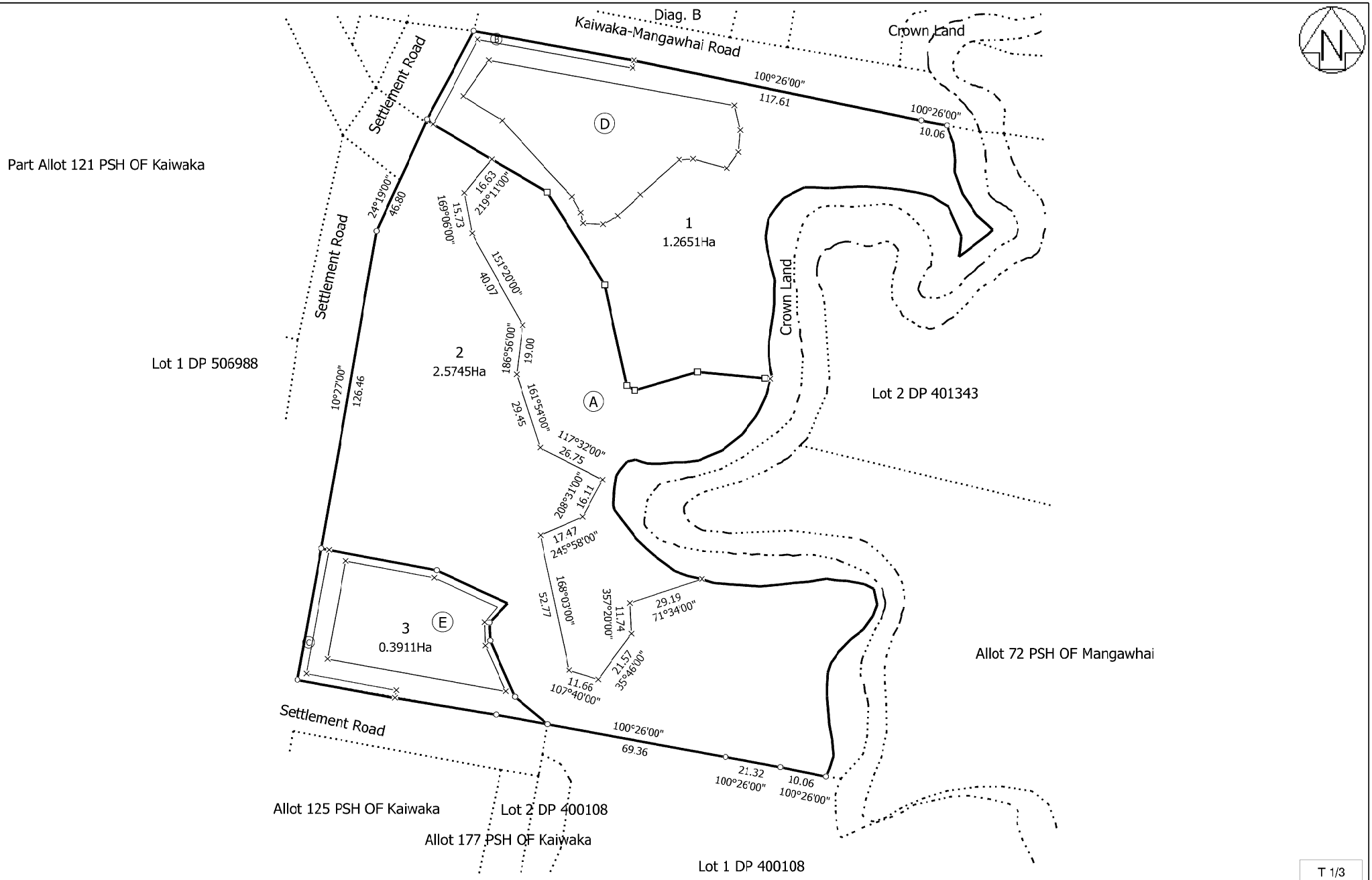

T 1/3

Land District: North Auckland Digitally Generated Plan Generated on: 17/03/2021 11:48am Page 3 of 5	Lots 1 - 3 Being a Subdivision of Allotment 310 Parish of Kaiwaka	Surveyor: Adam Paul Stanley Booth Firm: Pacific Coast Surveys Limited (Mang	Title Plan LT 560279 DRAFT

Diag. A

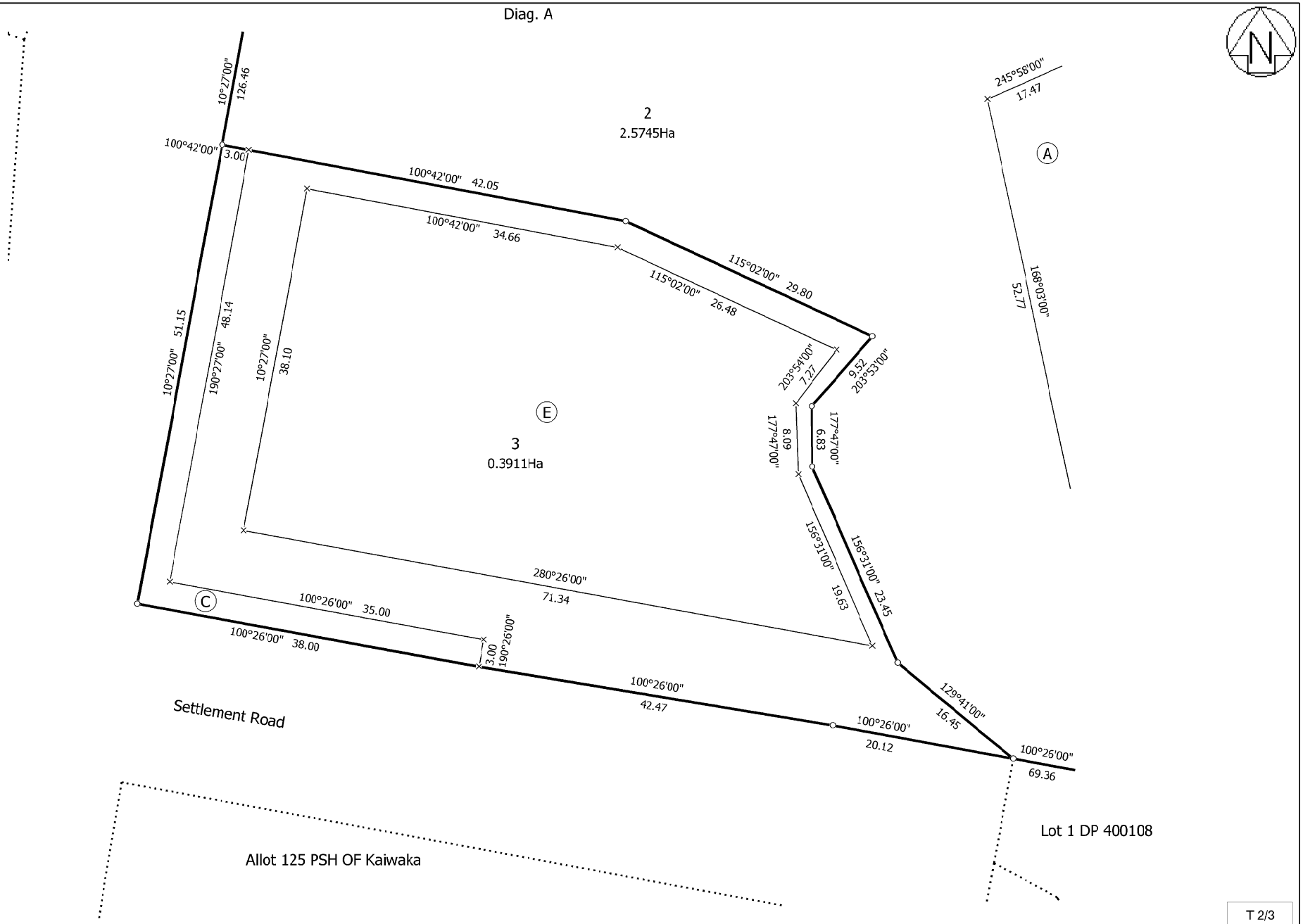

T 2/3

Land District: North Auckland Digitally Generated Plan Generated on: 17/03/2021 11:48am Page 4 of 5	Lots 1 - 3 Being a Subdivision of Allotment 310 Parish of Kaiwaka	Surveyor: Adam Paul Stanley Booth Firm: Pacific Coast Surveys Limited (Mang	Title Plan LT 560279 DRAFT

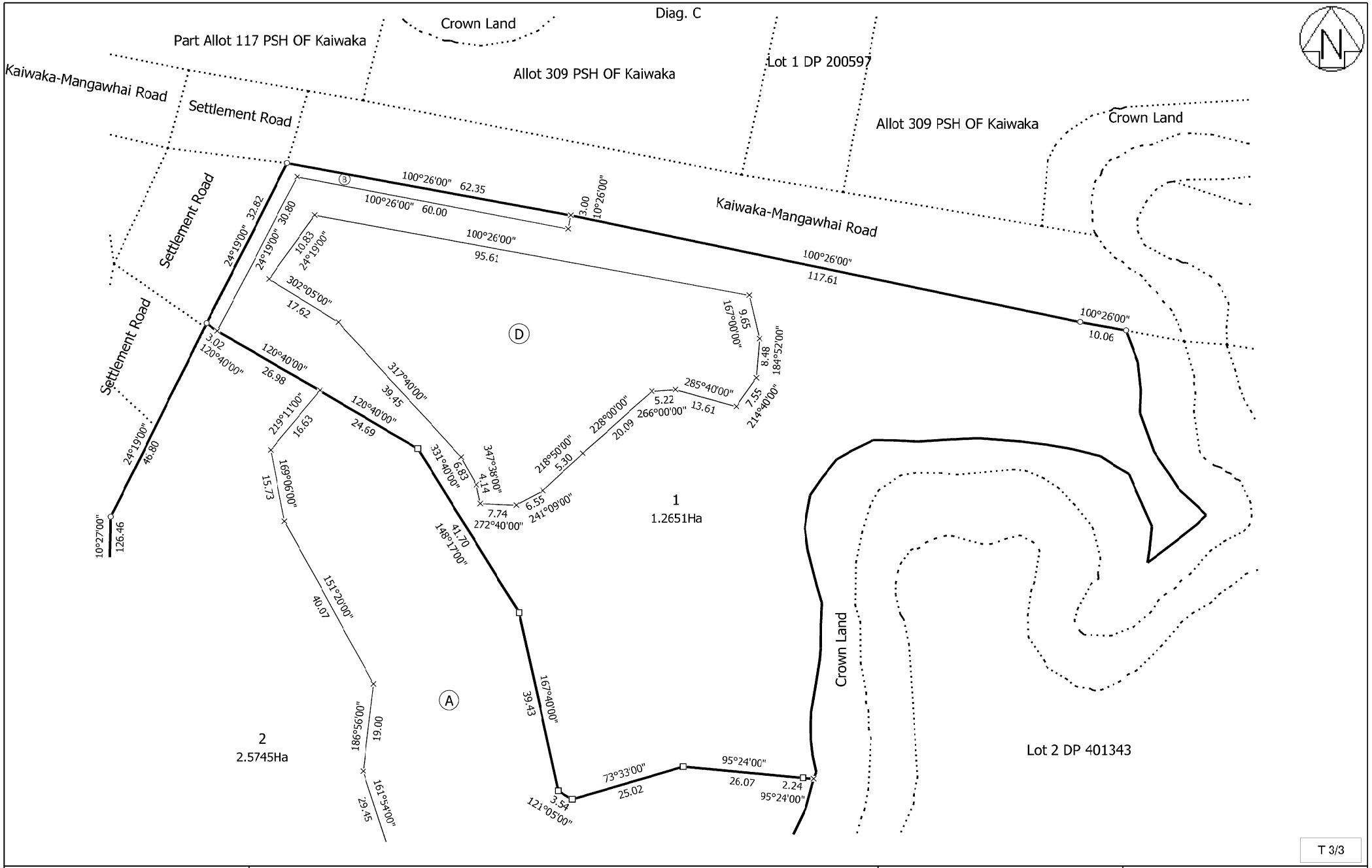

Land District: North Auckland Digitally Generated Plan Generated on: 17/03/2021 11:48am Page 5 of 5	Lots 1 - 3 Being a Subdivision of Allotment 310 Parish of Kaiwaka	Surveyor: Adam Paul Stanley Booth Firm: Pacific Coast Surveys Limited (Mang	Title Plan LT 560279 DRAFT

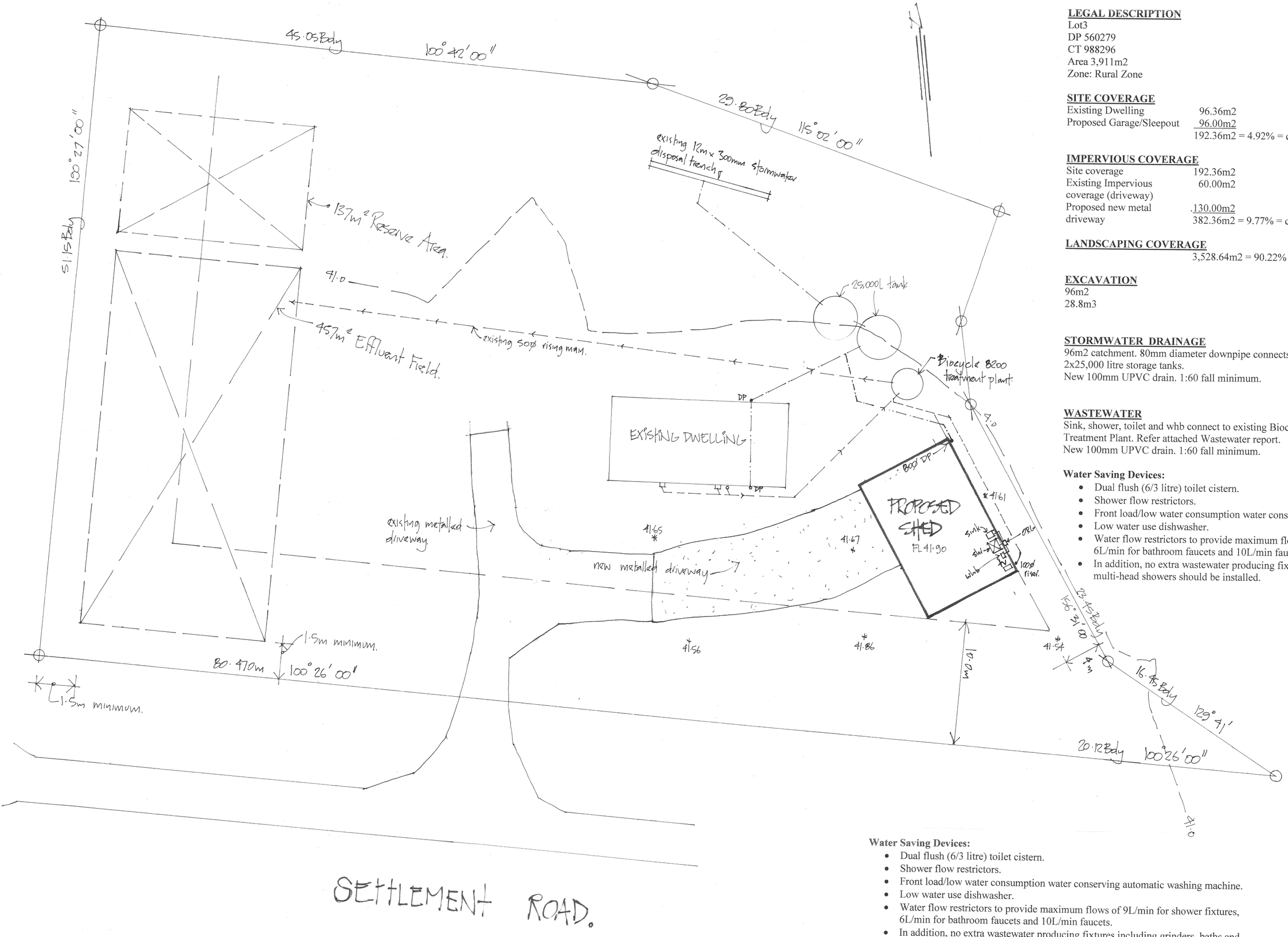

LEGAL DESCRIPTION
Lot3
DP 560279
CT 988296
Area 3,911m2
Zone: Rural Zone

SITE COVERAGE

Existing Dwelling	96.36m2
Proposed Garage/Sleepout	96.00m2
	192.36m2 = 4.92% = complying.

IMPERVIOUS COVERAGE

Site coverage	192.36m2
Existing Impervious coverage (driveway)	60.00m2
Proposed new metal driveway	130.00m2
	382.36m2 = 9.77% = complying.

LANDSCAPING COVERAGE
3,528.64m2 = 90.22% = complying

EXCAVATION
96m2
28.8m3

STORMWATER DRAINAGE
96m2 catchment. 80mm diameter downpipe connects to existing 2x25,000 litre storage tanks.
New 100mm UPVC drain. 1:60 fall minimum.

WASTEWATER
Sink, shower, toilet and whb connect to existing Biocycle 8200 Treatment Plant. Refer attached Wastewater report.
New 100mm UPVC drain. 1:60 fall minimum.

Water Saving Devices:
- Dual flush (6/3 litre) toilet cistern.
- Shower flow restrictors.
- Front load/low water consumption water conserving automatic washing machine.
- Low water use dishwasher.
- Water flow restrictors to provide maximum flows of 9L/min for shower fixtures, 6L/min for bathroom faucets and 10L/min faucets.
- In addition, no extra wastewater producing fixtures including grinders, baths and multi-head showers should be installed.

Water Saving Devices:
- Dual flush (6/3 litre) toilet cistern.
- Shower flow restrictors.
- Front load/low water consumption water conserving automatic washing machine.
- Low water use dishwasher.
- Water flow restrictors to provide maximum flows of 9L/min for shower fixtures, 6L/min for bathroom faucets and 10L/min faucets.
- In addition, no extra wastewater producing fixtures including grinders, baths and multi-head showers should be installed.

Rev	Date	Issue
A	9/21	Bldg Application

Habitat Design Ltd
Architectural Designers
PO Box 25 715
St Heliers, Auckland
021 2519309
Email: russellswain@habitatdesign.co.nz

Client: GINA UTTING

Project: PROPOSED NEW GARAGE/SLEEPOUT
752 SETTLEMENT ROAD
KAIWAKA
AUCKLAND

Drwg: SITE & DRAINAGE PLAN

Scale	Sheet No
1:200	1
Date: SEPT'21	Issue: A

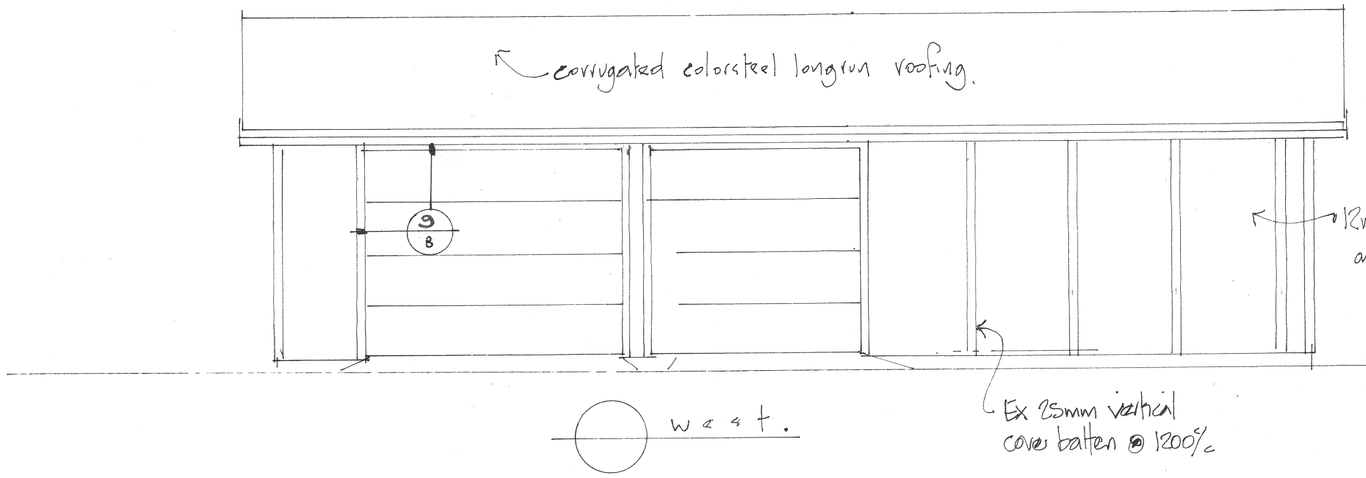

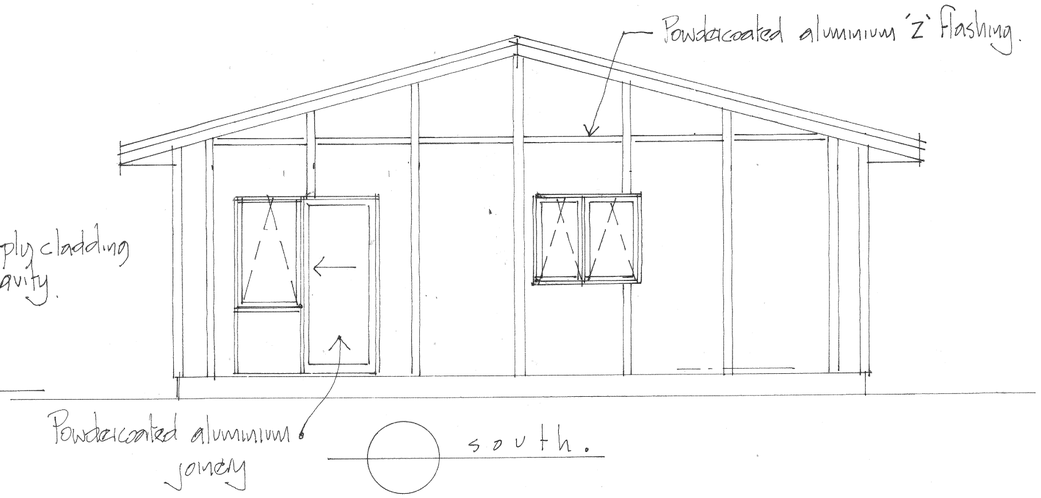

ELEVATION OR WALL: ALL	RISK SEVERITY												
Risk factor	Low			Medium			High			Very high			Subtotals for each risk factor
Wind zone	0			0			1		1	2			1
Number of storeys	0		0	1			2			4			0
Roof/wall intersection design	0		0	1			3			5			0
Eaves width	0			1			2			5			5
Envelope complexity	0		0	1			3			6			0
Deck design	0		0	2			4			6			0
												Total risk score:	6

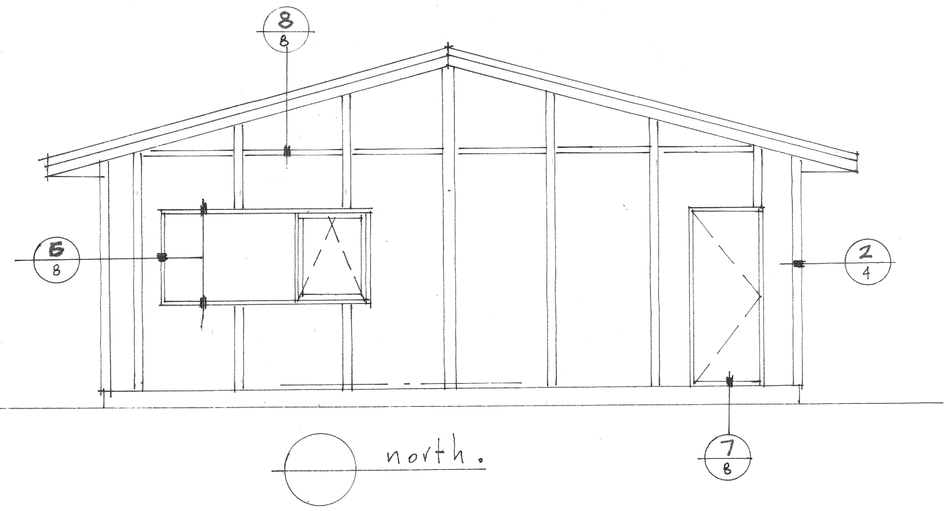

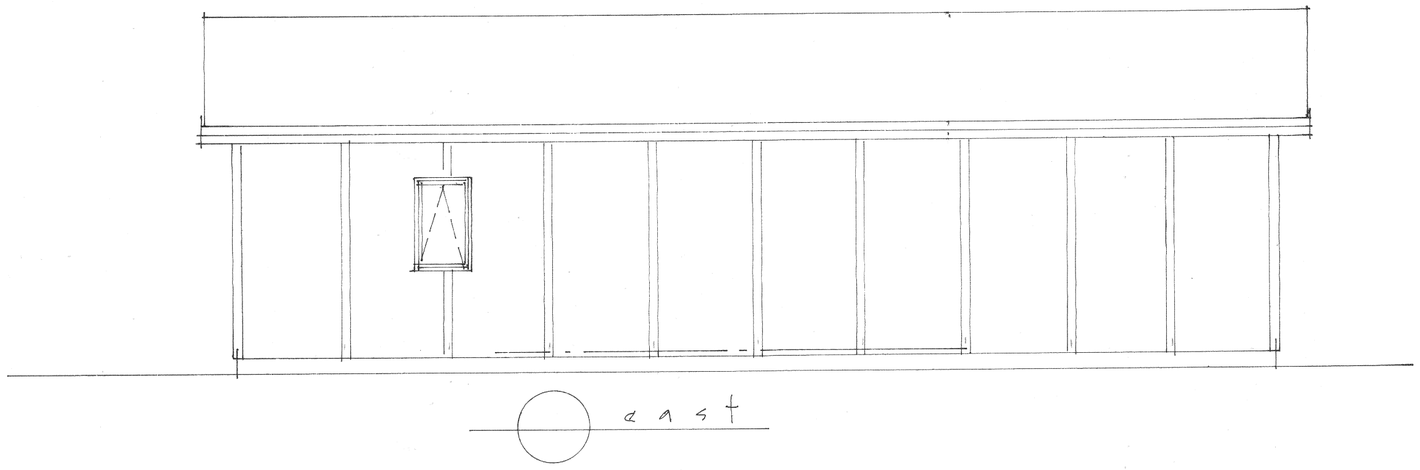

A	9/21	Bldg Application
Rev	Date	Issue

Habitat Design Ltd
Architectural Designers
PO Box 25 715
St Heliers, Auckland
021 2519309
Email: russellswain@habitatdesign.co.nz

Client
GINA UTTING

Project
PROPOSED NEW GARAGE/SLEEPOUT

752 SETTLEMENT ROAD
KAIWAKA
AUCKLAND

Drwg
ELEVATIONS

Scale	Sheet No
1:50	2
Date: SEPT'21	Issue: A

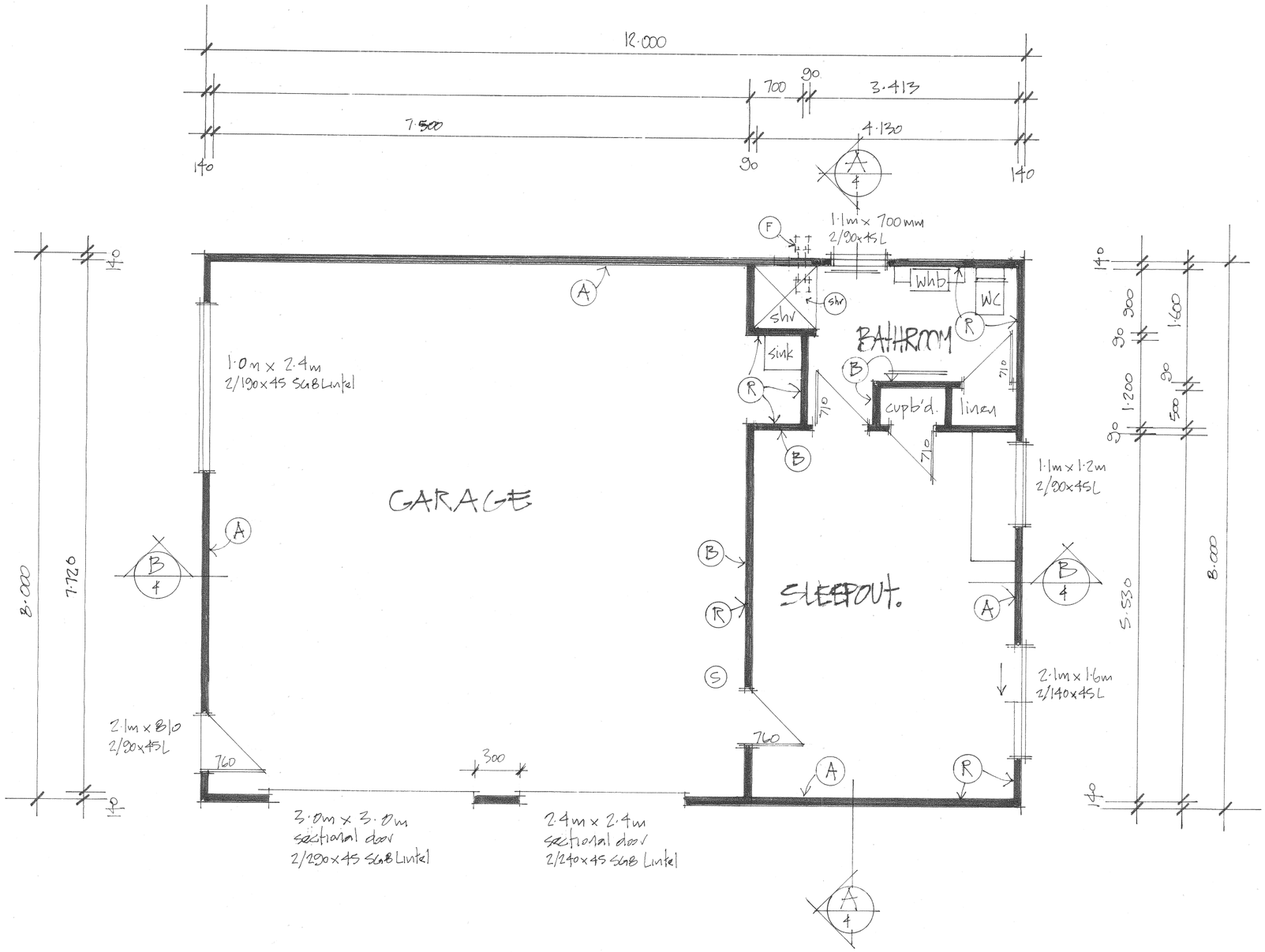

LEGEND

- (A) External - 90x45 SG8 studs at 400mm c/c.
- (B) Internal - 90x45 SG8 studs at 600mm c/c.
- (S) Ensure ceiling mounted smoke alarm – to be 3m maximum from sleep out door.
- (F) Extract fan ducted to soffit.
- (Shr) Proprietary shower (acrylic walls and tray).
- (R) Note: Sleepout/Bathroom to insulated complying with NZS 4218 Schedule Method.
  Walls – R2.2 fibreglass batt.
  Ceiling – R3.2 fibreglass batt.

A	9/21	Bldg Application
Rev	Date	Issue

Habitat Design Ltd
Architectural Designers
PO Box 25 715
St Heliers, Auckland
021 2519309
Email: russellswain@habitatdesign.co.nz

Client
GINA UTTING

Project
PROPOSED NEW GARAGE/SLEEPOUT

752 SETTLEMENT ROAD
KAIWAKA
AUCKLAND

Drwg
FLOOR PLAN

Scale	Sheet No
1:50	3
Date	Issue
SEPT'21	A

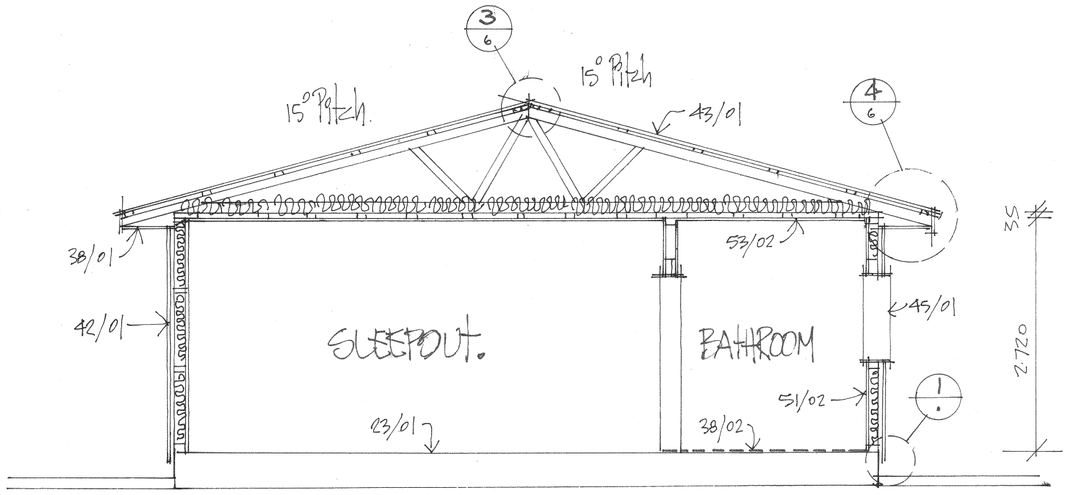

1 SECTION A

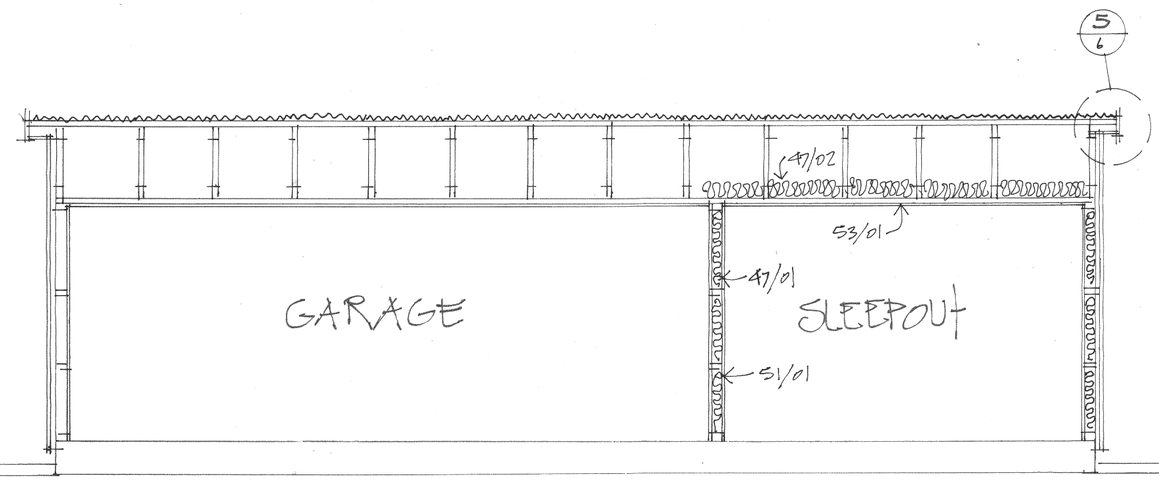

1 SECTION B

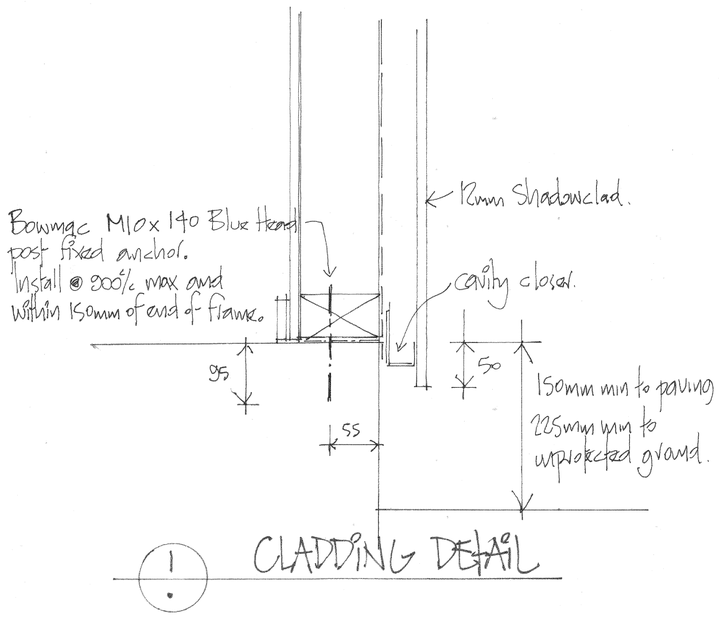

1/1 CLADDING DETAIL

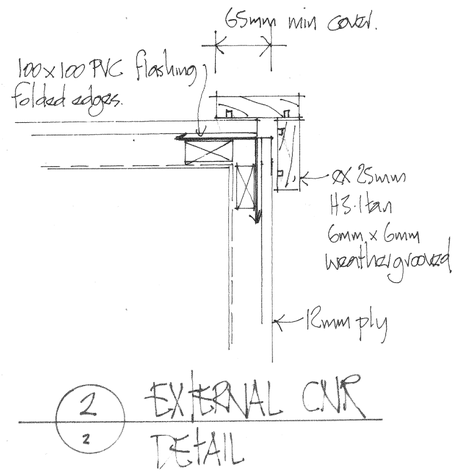

2/2 EXTERNAL CNR DETAIL

LEGEND

(00) General

PAINTING/STAINING:
Owner to confirm finish/colour to all exposed surfaces/linings.

(23) Foundation

23/01 WAFFLE SLAB: 100mm concrete topping screed (SE72 mesh) on 220mm polystyrene pods on DPC on 50mm minimum sand blinding. Refer Foundation Plan/sht 5.

(38) Timber

38/01 6mm Hardiflex soffit lining, paint finish.
38/02 Vinyl floor finish to bathroom.

(42) External Walls

42/01 12mm Shadowclad plywood cladding on ex50mm x 25mm H3.1tan vertical battens at 600mm c/c maximum on Thermakraft Watergate Plus building wrap.

(43) Roof

43/01 Corrugated Colorsteel longrun roofing on Thermakraft 215 roof underlay on 70x45mm H1.2 SG8 purlins at 900mm c/c maximum (fixing 1/10g self drilling screw x 80mm long) on rafters/trusses at 900mm c/c.

(45) Windows and Doors

45/01 New powder coated double glazed aluminum joinery. Manufacturer Vantage Aluminium.

(47) Insulation

47/01 R2.2 90mm fibreglass batts to wall cavity.
47/02 R3.2 180mm fibreglass insulation flat ceilings.

(51) Partitions and Linings

51/01 10mm Standard GIB BD wall lining.
51/02 13mm Aqualine to wet areas.
Nb: refer sheet 7for wall bracing plan.

(53) Ceilings

53/01 13mm standard GIB BOARD ceiling lining on 70x35mm timber battens at 600mm c/c maximum.
53/02 13mm Aqualine GIB BOARD ceiling lining on 70x35mm timber battens at 600mm c/c maximum.

A	9/21	Bldg Application
Rev	Date	Issue

Habitat Design Ltd
Architectural Designers
PO Box 25 715
St Heliers, Auckland
021 2519309
Email: russellswain@habitatdesign.co.nz

Client
GINA UTTING

Project
PROPOSED NEW GARAGE/SLEEPOUT

752 SETTLEMENT ROAD
KAIWAKA
AUCKLAND

Drwg
SECTIONS A & B

Scale	Sheet No
1:50	4
Date	Issue
SEPT'21	A

Note: 25 MPa Concrete
All ground under the slab shall be free from unsuitable fill.
Builder to remove any unsuitable fill and compact GAP40 to required level.

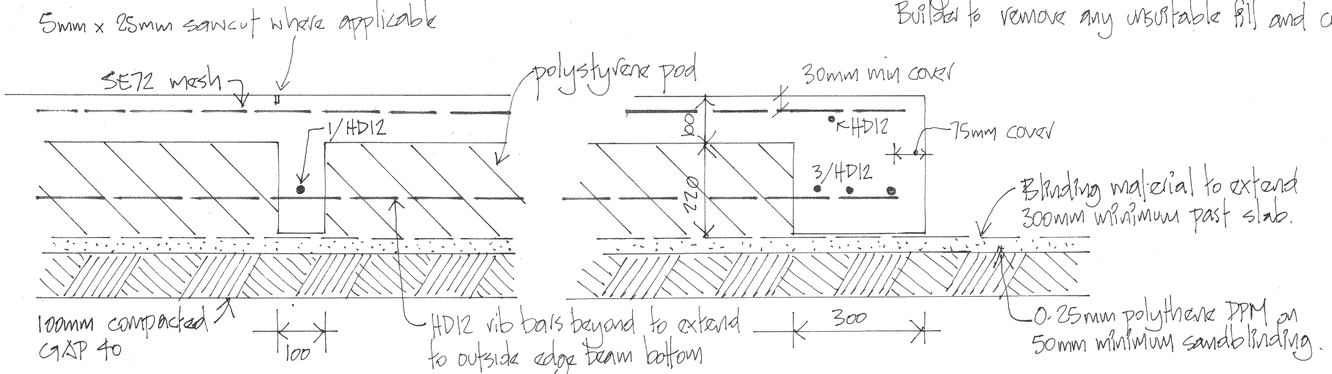

INTERNAL BEAM DETAIL

EXTERNAL BEAM DETAIL

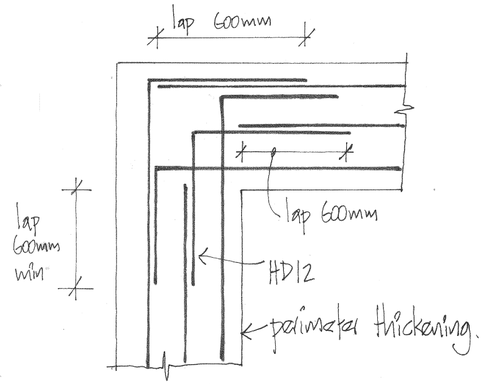

CORNER PLAN DETAIL
EDGE BEAM

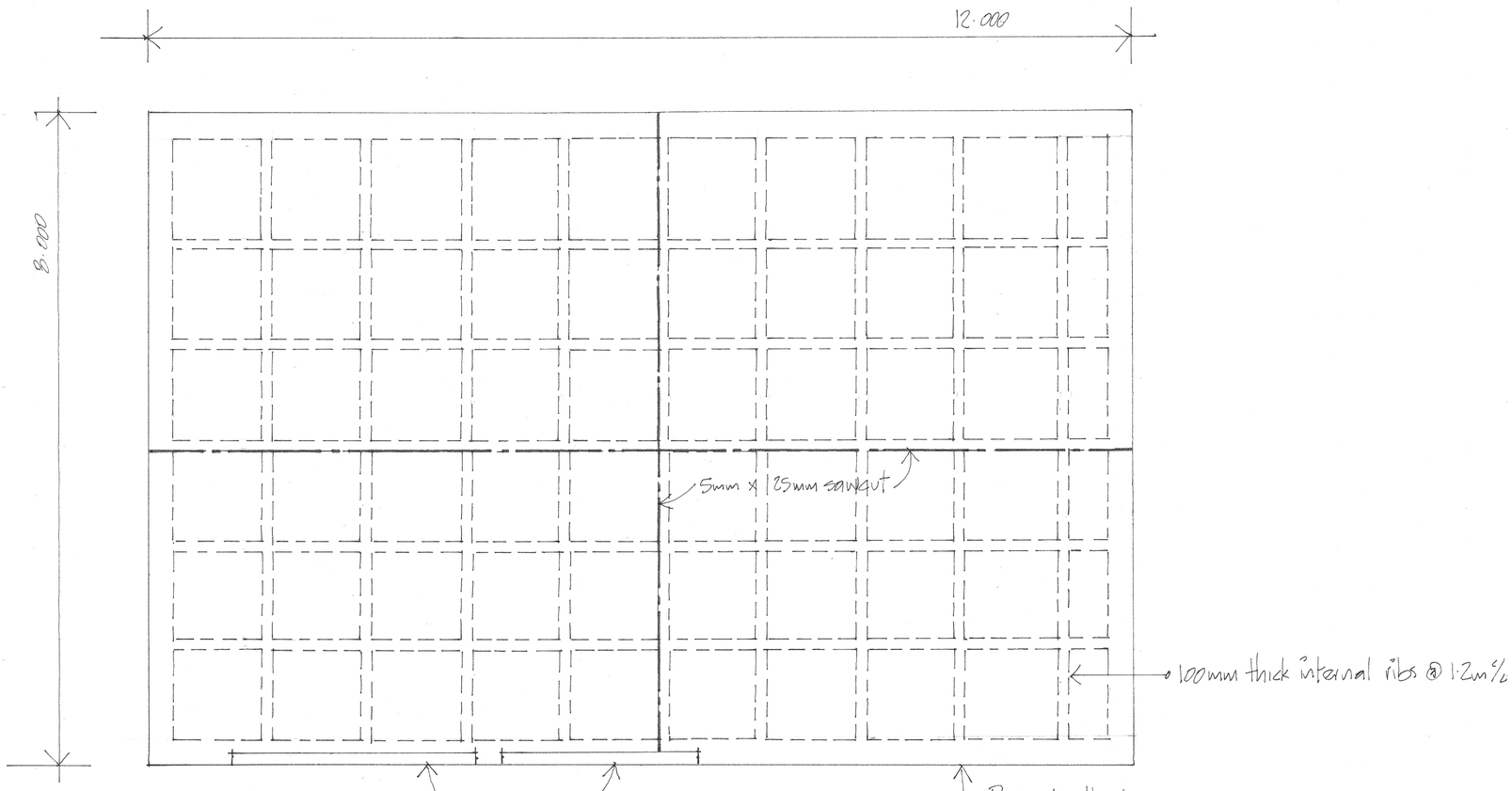

NOTE:

* No internal loadbearing thickenings required as trussed roof transfers loads to outside walls.
* Wiley Geotechnical to inspect excavation prior to placement of fill or foundation elements.
  Contact: Matt Wiley Mob: 021 0399 385
* Structural Engineer to inspect reinforcing steel prior to concrete placement.
  Contact: Pro Consult ph. 09 973 5181.

A	9/21	Bldg Application
Rev	Date	Issue

Habitat Design Ltd
Architectural Designers
PO Box 25 715
St Heliers, Auckland
021 2519309
Email: russellswain@habitatdesign.co.nz

Client: GINA UTTING

Project: PROPOSED NEW GARAGE/SLEEPOUT
752 SETTLEMENT ROAD
KAIWAKA
AUCKLAND

Drwg: FOUNDATION PLAN

Scale	Sheet No
1:50 1:10	5
Date SEPT'21	Issue A

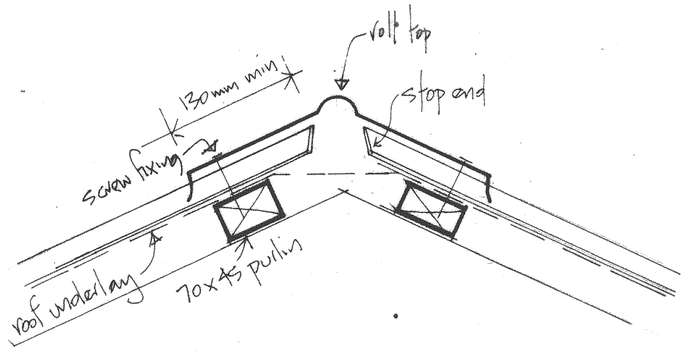

RIDGE DETAIL 3/4

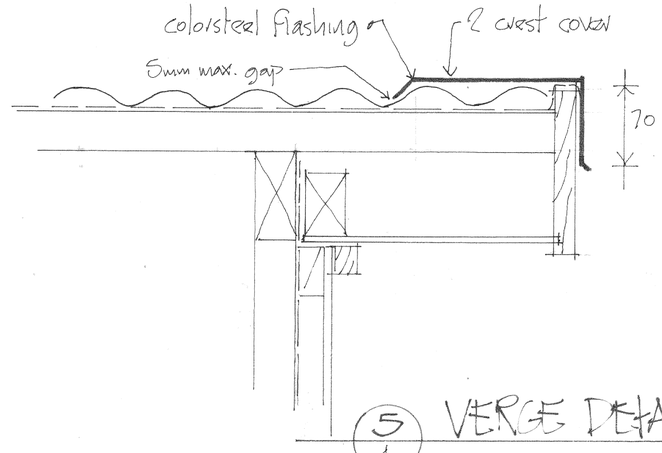

5/4 VERGE DETAIL

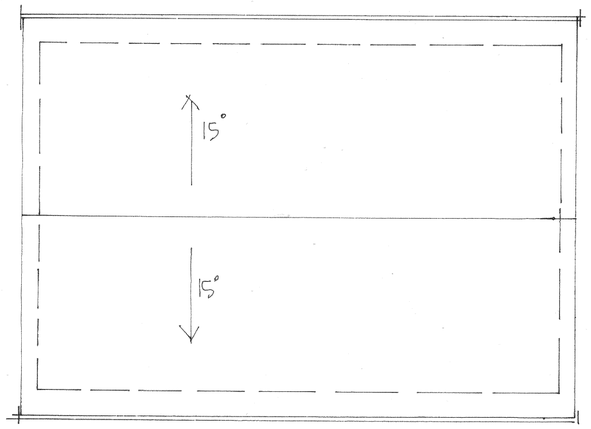

ROOF PLAN

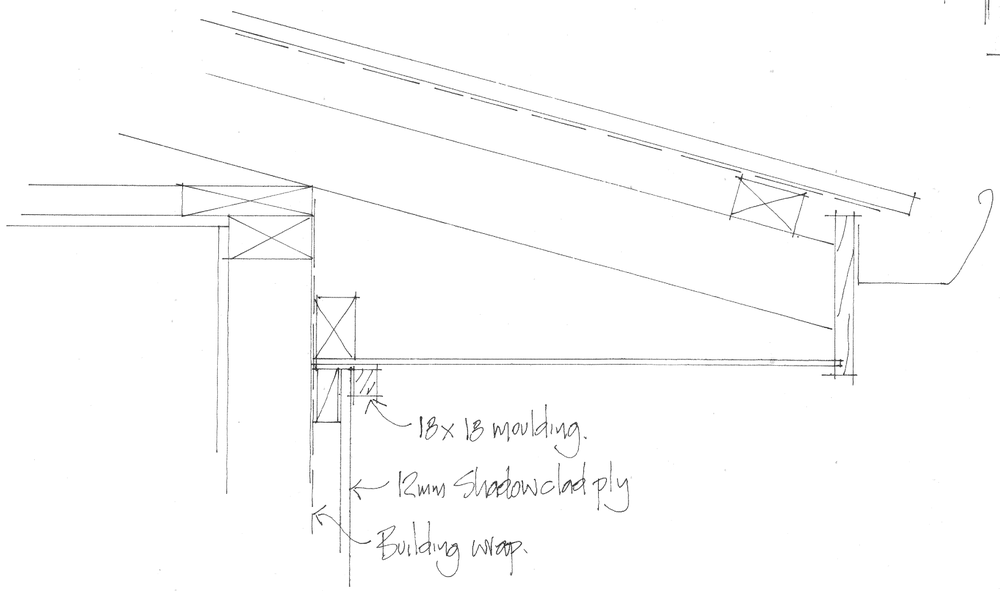

EAVE DETAIL 4/4

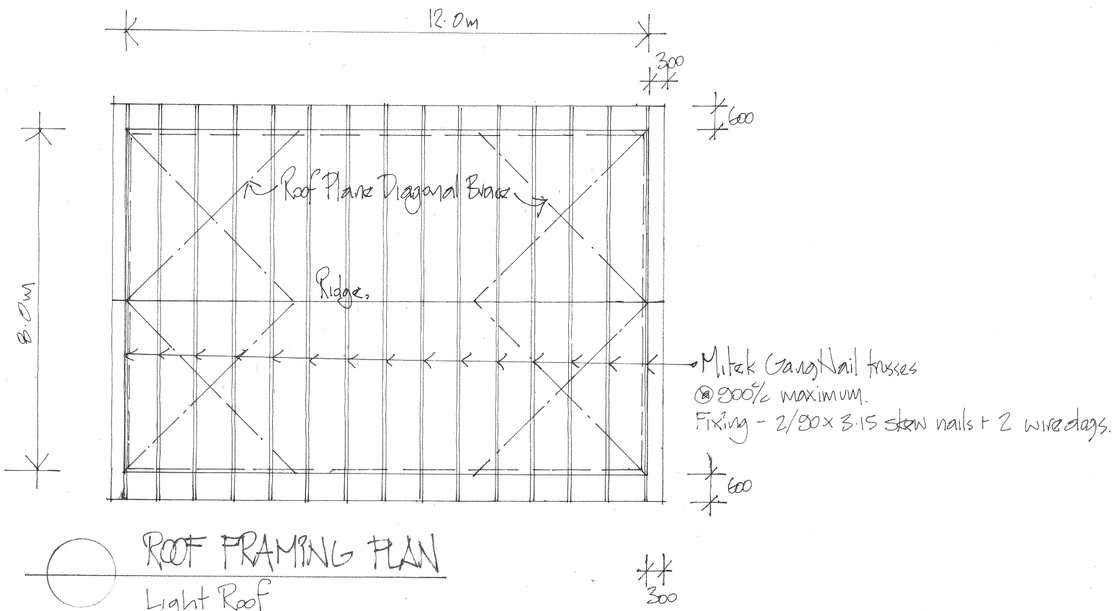

ROOF FRAMING PLAN

Light Roof
15° Pitch
High Wind Zone.

A	9/21	Bldg Application
Rev	Date	Issue

Habitat Design Ltd
Architectural Designers
PO Box 25 715
St Heliers, Auckland
021 2519309
Email: russellswain@habitatdesign.co.nz

Client
GINA UTTING

Project
PROPOSED NEW GARAGE/SLEEPOUT

752 SETTLEMENT ROAD
KAIWAKA
AUCKLAND

Drwg
ROOF FRAMING PLAN & DETAILS

Scale	Sheet No
1:50	6
Date: SEPT'21	Issue: A

GIB EzyBrace® Systems specification GS1-N

Specification code	Minimum length (m)	Lining requirement
GS1-N	0.4	Any 10mm or 13mm GIB® Standard plasterboard to one side only

WALL FRAMING
Wall framing to comply with;

- NZBC B1 — Structure B1/AS1 Clause 3 Timber (NZS 3604:2011).
- NZBC B2 — Durability B2/AS1 Clause 3.2 Timber (NZS 3602).

Framing dimensions and height as determined by NZS 3604:2011 stud and top plate tables for load bearing and non-bearing walls. The use of kiln dried stress graded timber is recommended.

BOTTOM PLATE FIXING
Timber floor
Pairs of hand driven 100 x 3.75mm nails at 600mm centres; or three power driven 90 x 3.15mm nails at 600mm centres.

Concrete floor
Internal Wall Bracing Lines: In accordance with the requirements of NZS 3604:2011 for internal wall plate fixing or 75 x 3.8mm shot fired fasteners with 16mm discs spaced at 150mm and 300mm from end studs and 600mm centres thereafter.

External Wall Bracing Lines: In accordance with the requirements of NZS 3604:2011 for external wall bottom plate fixing.

WALL LINING
- Any 10mm or 13mm GIB® plasterboard lining.
- Sheets can be fixed vertically or horizontally.
- Sheet joints shall be touch fitted.
- Use full length sheets where possible.

PERMITTED ALTERNATIVES
For permitted GIB® plasterboard alternatives refer to p. 5 in GIB EzyBrace® Systems literature.

FASTENING THE LINING
Fasteners
32mm x 6g GIB® Grabber® High Thread Screws, 32mm x 7g GIB® Grabber® Dual Thread Screws or 30mm GIB® Nails. If using the GIBFix® Angle use only 32mm x 7g GIB® Grabber® Dual Thread Screws.

Fastener centres
50,100,150, 225, 300mm maximum from each corner and 150mm thereafter around the perimeter of the bracing element. For vertically fixed sheets place fasteners at 300mm maximum centres to intermediate sheet joints. For horizontally fixed sheets place single fasteners to the sheet edge where it crosses the stud. Use daubs of GIBFix® adhesive at 300mm maximum centres to intermediate studs. Place fasteners no closer than 12mm from paper bound sheet edges and 18mm from any sheet end or cut edge.

JOINTING
Joint strength is important in delivering bracing system performance. All fastener heads stopped and all sheet joints GIB® Joint Tape reinforced and stopped in accordance with the GIB® Site Guide.

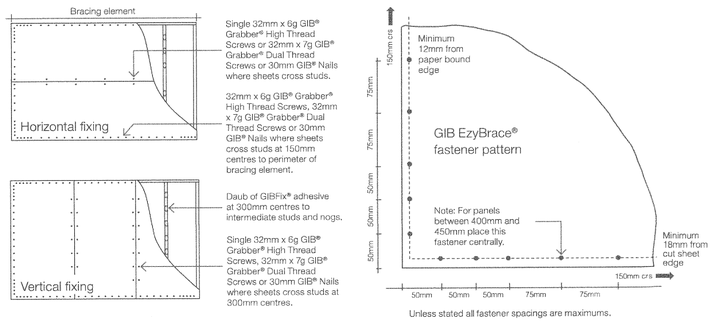

In order for GIB® systems to perform as tested, all components must be installed exactly as prescribed. Substituting components produces an entirely different system and may seriously compromise performance. Follow the specifications. This specification sheet is issued in conjunction with the publication GIB EzyBrace® Systems

GIB EzyBrace® Systems specification BL1-H

Specification code	Minimum length (m)	Lining requirement	Other requirements
BL1-H	0.4	10mm or 13mm GIB Braceline® to one side only	Hold downs

WALL FRAMING
Wall framing to comply with;

- NZBC B1 — Structure B1/AS1 Clause 3 Timber (NZS 3604:2011).
- NZBC B2 — Durability B2/AS1 Clause 3.2 Timber (NZS 3602).

Framing dimensions and height as determined by NZS 3604:2011 stud and top plate tables for load bearing and non-bearing walls. The use of kiln dried stress graded timber is recommended.

BOTTOM PLATE FIXING
Timber floor
Use panel hold downs at each end of the bracing element. The GIB HandiBrac® is recommended. See details in GIB EzyBrace® Systems or GIB® Site Guide.

Pairs of hand driven 100 x 3.75mm nails at 600mm centres; or Three power driven 90 x 3.15mm nails at 600mm centres.

Concrete floor
Use panel hold downs at each end of the bracing element. The GIB HandiBrac® is recommended. See details in GIB EzyBrace® Systems or GIB® Site Guide. Within the length of the bracing element bottom plates are to be fixed in accordance with the requirements of NZS 3604:2011.

WALL LINING
- A layer of 10mm or 13mm GIB Braceline®
- Sheets can be fixed vertically or horizontally.
- Sheet joints shall be touch fitted.
- Use full length sheets where possible.

PERMITTED ALTERNATIVES
For permitted GIB® plasterboard alternatives refer to p. 5 in GIB EzyBrace® Systems literature.

FASTENING THE LINING
Fasteners
32mm x 6g GIB® Grabber® High Thread Screws or 32mm x 7g GIB® Grabber® Dual Thread Screws. If using the GIBFix® Framing System or if fastening through GIBFix® Angles use only 32mm x 7g GIB® Grabber® Dual Thread Screws.

Fastener centres
50,100,150, 225, 300mm from maximum each corner and 150mm thereafter around the perimeter of the bracing element. For vertically fixed sheets place fasteners at 300mm maximum centres to the sheet joint. For horizontally fixed sheets place single fasteners to the sheet edge where it crosses the stud. Use daubs of GIBFix® adhesive at 300mm maximum centres to intermediate studs. Place fasteners no closer than 12mm from paper bound sheet edges and 18mm from any sheet end or cut edge.

JOINTING
Joint strength is important in delivering bracing system performance. All fastener heads stopped and all sheet joints GIB® Joint Tape reinforced and stopped in accordance with the GIB® Site Guide.

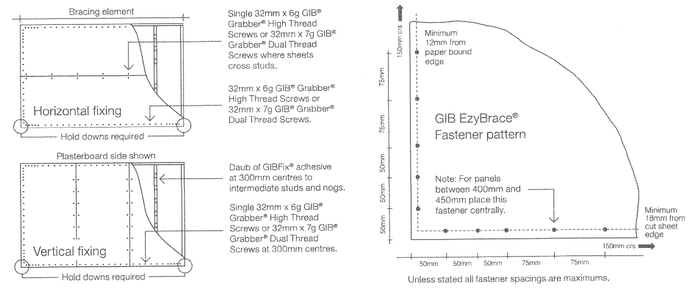

In order for GIB® systems to perform as tested, all components must be installed exactly as prescribed. Substituting components produces an entirely different system and may seriously compromise performance. Follow the specifications. This specification sheet is issued in conjunction with the publication GIB EzyBrace® Systems

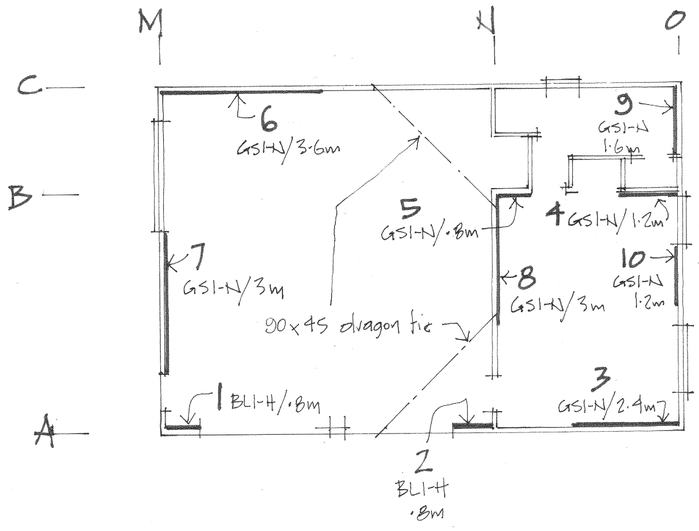

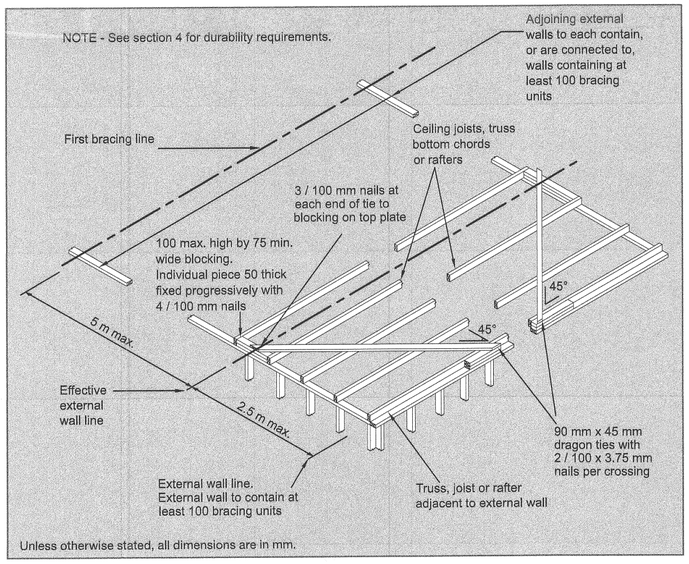

Figure 8.1 – Dragon ties (see 8.3.3.1)

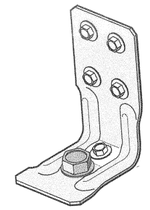

GIB HandiBrac® installation

Developed in conjunction with MiTek™, the GIB HandiBrac® has been designed and tested by Winstone Wallboards for use in GIB EzyBrace® elements that require hold-downs. The GIB HandiBrac® is a substitute for bottom plate hold-down straps.

- Quick and easy to fit.
- May be fitted at any stage before lining.
- Framing face is clear to allow flush lining.
- Easily inspected.

The GIB HandiBrac® with BOWMAC® blue head screw bolt is suitable for timber and concrete floors constructed in accordance with NZS 3604:2011.

Concrete floor	
External walls	Internal walls
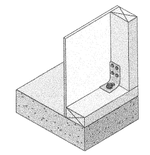 GEB009	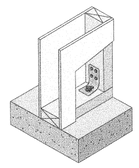 GEB010
Position GIB HandiBrac® as close as practicable to the internal edge of the bottom plate.	Position GIB HandiBrac® at the stud/plate junction and at mid-width of plate.
Hold-down fastener requirements	
A mechanical fastening with a minimum characteristic uplift capacity of 15kN or use supplied BT10/140 screwbolt in GIB HandiBrac® pack.	

A	9/21	Bldg Application
Rev	Date	Issue

Habitat Design Ltd
Architectural Designers
PO Box 25 715
St Heliers, Auckland
021 2519309
Email: russellswain@habitatdesign.co.nz

Client
GINA UTTING

Project
PROPOSED NEW GARAGE/SLEEPOUT
752 SETTLEMENT ROAD
KAIWAKA
AUCKLAND

Drwg
WALL BRACING PLAN

Scale	Sheet No
1:100	7
Date	Issue
SEPT'21	A

Memorandum from licensed building practitioner: Certificate of design work

Section 45 and section 30C, Building Act 2004

Please fill in the form as fully and correctly as possible.

If there is insufficient room on the form for requested details, please continue on another sheet and attach the additional sheet(s) to this form.

THE BUILDING	
Street address: 752 Settlement Rd	
Suburb: Hakaru	
Town/City: Kaiwaka	Postcode: 0975

THE OWNER(S)	
Name(s): Gina Utting	
Mailing address: 752 Settlement Rd	
Suburb: akaru	PO Box/Private Bag:
Town/City: Kaiwaka	Postcode: 0975
Phone number:	Email address: ginautting@gmail.com

BASIS FOR PROVIDING THIS MEMORANDUM

I am providing this memorandum in my role as the: Please tick the option that applies ✓

○	**sole** designer of all of the RBW design outlined in this memorandum – I carried out all of the RBW design work myself – no other person will be providing any additional memoranda for the project
○	**lead** designer who carried out some of the RBW design myself but also supervised other designers – this memorandum covers their RBW design work as well as mine, and **no other** person will be providing any additional memoranda for the project
✓	**lead** designer for all but specific elements of RBW – this memorandum only covers the RBW design work that I carried out or supervised and the **other** designers will provide their own memorandum relating to their specific RBW design
○	**specialist** designer who carried out specific elements of RBW design work as outlined in this memorandum – other designers will be providing a memorandum covering the remaining RBW design work

IDENTIFICATION OF DESIGN WORK THAT IS RESTRICTED BUILDING WORK (RBW)

I Russell Swain carried out / supervised the following design work that is restricted building work

PRIMARY STRUCTURE: B1

Design work that is RBW	Description of RBW	Carried out or supervised	Reference to plans and specifications
Tick ✓ if included. Cross ✗ if excluded	If appropriate, provide details of the RBW	Tick ✓ whether you carried out this design work or supervised someone else carrying out this design work	If appropriate, specify references
All RBW design work relating to B1 ✗		○ Carried out ○ Supervised	
Foundations and subfloor framing ✗		○ Carried out ○ Supervised	

Design work that is RBW	Description of RBW	Carried out or supervised	Reference to plans and specifications
Tick ✓ if included. Cross ✗ if excluded	If appropriate, provide details of the RBW	Tick ✓ whether you carried out this design work or supervised someone else carrying out this design work	If appropriate, specify references
Walls ☑		◉ Carried out ○ Supervised	
Roof ☒		○ Carried out ○ Supervised	
Columns and beams ☑		◉ Carried out ○ Supervised	
Bracing ☑		◉ Carried out ○ Supervised	
Other ○		○ Carried out ○ Supervised	

Design work that is RBW	Description of RBW	Carried out or supervised	Reference to plans and specifications
Tick ✓ if included. Cross ✗ if excluded	If appropriate, provide details of the RBW	Tick ✓ whether you carried out this design work or supervised someone else carrying out this design work	If appropriate, specify references
EXTERNAL MOISTURE MANAGEMENT SYSTEMS: E2			
All RBW design work relating to E2 ☑		◉ Carried out ○ Supervised	
Damp proofing ☒		○ Carried out ○ Supervised	
Roof cladding or roof cladding system ☑		◉ Carried out ○ Supervised	
Ventilation system (for example, subfloor or cavity) ☑	Cavity	◉ Carried out ○ Supervised	
Wall cladding or wall cladding system ☑		◉ Carried out ○ Supervised	
Waterproofing ☑		◉ Carried out ○ Supervised	
Other ○		○ Carried out ○ Supervised	

Design work that is RBW	Description of RBW	Carried out or supervised	Reference to plans and specifications
Tick ✓ if included. Cross ✗ if excluded	If appropriate, provide details of the RBW	Tick ✓ whether you carried out this design work or supervised someone else carrying out this design work	If appropriate, specify references
FIRE SAFETY SYSTEMS: C1 - C6			
Emergency warning systems Evacuation and fire service operation systems ✓ Suppression or control systems Other	smoke alarm	◉ Carried out ○ Supervised	

Note: The design of fire safety systems is only restricted building work when it involves small-to-medium apartment buildings as defined by the Building (Definition of Restricted Building Work) Order 2011.

WAIVERS AND MODIFICATIONS

Waivers or modifications of the Building Code are required. ○ Yes ◉ No

If Yes, provide details of the waivers or modifications below:

Clause	Waiver/modification required
List relevant clause numbers of building code	Specify nature of waiver or modification of building code required

ISSUED BY

Name and contact details of the licensed building practitioner who is licensed to carry out or supervise design work that is restricted building work.

Name: Russell Swain	LBP or Registration number: BP113899
The practitioner is a: (●) Design LBP ( ) Registered architect ( ) Chartered professional engineer	
Design Entity or Company (optional):	
Mailing address (if different from below):	
Street address/Registered office: 62a Waimarie St St Heliers	
Suburb:	Town/City: Auckland
PO Box/Private Bag:	Postcode: 1070
Phone number:	Mobile: 0212519309
After hours:	Fax:
Email address: russellswain@habitatdesign.co.nz	Website:

DECLARATION

I Russell Swain LBP, state that I have applied the skill and care reasonably required of a competent design professional in carrying out or supervising the Restricted Building Work (RBW) described in this form, and that based on this, I also state that the RBW:

- Complies with the building code, or
- Complies with the building code subject to any waiver or modification of the building code recorded on this form

Signature: RSwain

Date: 1.9.21

Memorandum from licensed building practitioner: Certificate of design work

Section 45 and section 30C, Building Act 2004

Please fill in the form as fully and correctly as possible.

If there is insufficient room on the form for requested details, please continue on another sheet and attach the additional sheet(s) to this form.

THE BUILDING			
Street address:	752 Settlement Road		
Suburb:	Hakaru		
Town/City:	Hakaru	Postcode:	0975

THE OWNER(S)			
Name(s):	Gina Utting		
Mailing address:	752 Settlement Road		
Suburb:	Hakaru	PO Box/Private Bag:	
Town/City:	Hakaru	Postcode:	0975
Phone number:	0212670724	Email address:	ginautting@gmail.com

BASIS FOR PROVIDING THIS MEMORANDUM

I am providing this memorandum in my role as the: Please tick the option that applies ✓

○	**sole** designer of all of the RBW design outlined in this memorandum – I carried out all of the RBW design work myself – no other person will be providing any additional memoranda for the project
○	**lead** designer who carried out some of the RBW design myself but also supervised other designers – this memorandum covers their RBW design work as well as mine, and **no other** person will be providing any additional memoranda for the project
○	**lead** designer for all but specific elements of RBW – this memorandum only covers the RBW design work that I carried out or supervised and the **other** designers will provide their own memorandum relating to their specific RBW design
✓	**specialist** designer who carried out specific elements of RBW design work as outlined in this memorandum – other designers will be providing a memorandum covering the remaining RBW design work

IDENTIFICATION OF DESIGN WORK THAT IS RESTRICTED BUILDING WORK (RBW)

I Stewart Hobbs carried out / supervised the following design work that is restricted building work

PRIMARY STRUCTURE: B1

Design work that is RBW	Description of RBW	Carried out or supervised	Reference to plans and specifications
Tick ✓ if included. Cross ✗ if excluded	If appropriate, provide details of the RBW	Tick ✓ whether you carried out this design work or supervised someone else carrying out this design work	If appropriate, specify references
All RBW design work relating to B1 ○		○ Carried out ○ Supervised	
Foundations and subfloor framing ✓	Rib raft foundations	○ Carried out ✓ Supervised	Sheet 5

Design work that is RBW	Description of RBW	Carried out or supervised	Reference to plans and specifications
Tick ✓ if included. Cross ✗ if excluded	If appropriate, provide details of the RBW	Tick ✓ whether you carried out this design work or supervised someone else carrying out this design work	If appropriate, specify references
Walls ◯		◯ Carried out ◯ Supervised	
Roof ◯		◯ Carried out ◯ Supervised	
Columns and beams ◯		◯ Carried out ◯ Supervised	
Bracing ◯		◯ Carried out ◯ Supervised	
Other ◯		◯ Carried out ◯ Supervised	

Design work that is RBW	Description of RBW	Carried out or supervised	Reference to plans and specifications
Tick ✓ if included. Cross ✗ if excluded	If appropriate, provide details of the RBW	Tick ✓ whether you carried out this design work or supervised someone else carrying out this design work	If appropriate, specify references
EXTERNAL MOISTURE MANAGEMENT SYSTEMS: E2			
All RBW design work relating to E2 ◯		◯ Carried out ◯ Supervised	
Damp proofing ◯		◯ Carried out ◯ Supervised	
Roof cladding or roof cladding system ◯		◯ Carried out ◯ Supervised	
Ventilation system (for example, subfloor or cavity) ◯		◯ Carried out ◯ Supervised	
Wall cladding or wall cladding system ◯		◯ Carried out ◯ Supervised	
Waterproofing ◯		◯ Carried out ◯ Supervised	
Other ◯		◯ Carried out ◯ Supervised	

Design work that is RBW	Description of RBW	Carried out or supervised	Reference to plans and specifications
Tick ✓ if included. Cross ✗ if excluded	If appropriate, provide details of the RBW	Tick ✓ whether you carried out this design work or supervised someone else carrying out this design work	If appropriate, specify references
FIRE SAFETY SYSTEMS: C1 - C6			
Emergency warning systems Evacuation and fire service operation systems ◯ Suppression or control systems Other		◯ Carried out ◯ Supervised	

Note: The design of fire safety systems is only restricted building work when it involves small-to-medium apartment buildings as defined by the Building (Definition of Restricted Building Work) Order 2011.

WAIVERS AND MODIFICATIONS

Waivers or modifications of the Building Code are required. ◯ Yes ✓ No

If Yes, provide details of the waivers or modifications below:

Clause	Waiver/modification required
List relevant clause numbers of building code	Specify nature of waiver or modification of building code required

ISSUED BY

Name and contact details of the licensed building practitioner who is licensed to carry out or supervise design work that is restricted building work.

Name: Stewart Hobbs	LBP or Registration number: 84415 IPENZ
The practitioner is a: ◯ Design LBP ◯ Registered architect ✓ Chartered professional engineer	
Design Entity or Company (optional): ProConsult	
Mailing address (if different from below):	
Street address/Registered office: Suite 2, 322 Remuera Road	
Suburb: Remuera	Town/City: Auckland
PO Box/Private Bag: P.O. Box 28 257	Postcode: 1541
Phone number: 09 973 5781	Mobile: 027 211 3999
After hours: 027 211 3999	Fax:
Email address: stewart@proconsult.co.nz	Website:

DECLARATION

I Stewart Hobbs LBP, state that I have applied the skill and care reasonably required of a competent design professional in carrying out or supervising the Restricted Building Work (RBW) described in this form, and that based on this, I also state that the RBW:

- Complies with the building code, or
- ~~Complies with the building code subject to any waiver or modification of the building code recorded on this form~~

Signature: 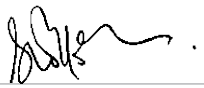

Date: 03/09/2021

proCONSULT
STRUCTURAL ENGINEERING

14B PROCALCCOV 11/03/2019

Level 2, Suite 2 322 Remuera Rd
P.O. Box 28257 Remuera 1541
Ph: (09) 973 5781 E: info@proconsult.co.nz

Client:	Gina Utting	Date:	SEPT 2021
Designer:	Aingaran M.	Job No:	13611
Drawings by:	Habitat Design		
Address:	752 Settlement Rd		

Lot: 3
DP: 560279

Standards:

AS/NZS 1170 (2004)	Design Actions	OTHER:
NZS 3101 (2006)	Concrete Structures	
NZS 3604 (2011)	Timber Structures (non-specific)	
NZS 3404 (1997)	Steel Structures	
NZS 3603 (1993)	Timber Structures	

Loads	Dead (kPa)	Live (kPa)

Wind Zone: —
EQ Zone: 1

Exposure Zone: C

Table of Contents	Pages
Rib raft foundation + details	S01-S03

Approved by: Asher

Date: 3/9/2021

Signed:

Document Reviewer

Site class	Type of construction	Beam reinforcement				Slab mesh	
		Depth (D) mm	Edge beam		Internal beam	Slab length, m	
			Mesh alternative	Bar alternative		<20	≥20 and <30
A	Clad frame	260	3-L8TM	3N12	1N12	SL72	SL82
	Articulated masonry veneer	310	3-L8TM	3N12	1N12	SL72	SL82
	Masonry veneer	310	3-L8TM	3N12	1N12	SL72	SL82
	Articulated full masonry (S/S)	310	3-L8TM	3N12	1N12	SL72	SL82
	Full masonry	—	—	—	—	—	—
S	Clad frame	260	3-L8TM	3N12	1N12	SL72	SL82
	Articulated masonry veneer	310	3-L8TM	3N12	1N12	SL72	SL82
	Masonry veneer	310	3-L8TM	3N12	1N12	SL72	SL82
	Articulated full masonry (S/S)	385	3-L8TM	3N12	1N16	SL72	SL82
	Full masonry	—	—	—	—	—	—
M	Clad frame	310	3-L11TM	3N12	1N12	SL72	SL82
	Articulated masonry veneer	310	3-L11TM	3N12	1N12	SL72	SL82
	Masonry veneer	310	3-L11TM	3N12	1N12	SL72	SL82
	Articulated full masonry (S/S)	610	2x3-L11TM	3N16	1N16	SL72	SL82
	Full masonry	—	—	—	—	—	—
M-D	Clad frame	310	3-L11TM	3N12	1N12	SL72	SL92
	Articulated masonry veneer	310	3-L11TM	3N12	1N12	SL72	SL92
	Masonry veneer	385	2x3-L11TM	3N16	1N16	SL72	SL92
	Articulated full masonry (S/S)	610	2x3-L11TM	3N16	1N16	SL72	SL92
	Full masonry	—	—	—	—	—	—
H1	Clad frame	310	3-L11TM	3N12	1N12	SL82	SL92
	Articulated masonry veneer	385	3-L11TM	3N12	1N12	SL82	SL92
	Masonry veneer	460	2x3-L11TM	3N16	1N16	SL82	SL92
	Articulated full masonry (S/S)	610	2x3-L11TM	3N16	1N16	SL82	SL92
	Full masonry	—	—	—	—	—	—
H1-D	Clad frame	310	3-L11TM	3N12	1N12	SL82	SL92
	Articulated masonry veneer	385	3-L11TM	3N12	1N12	SL82	SL92
	Masonry veneer (S/S)	460	2x3-L11TM	3N16	1N16	SL82	SL92
	Articulated full masonry	—	—	—	—	—	—
	Full masonry	—	—	—	—	—	—
H2	Clad frame	310	3-L11TM	3N12	1N12	SL82	SL92
	Articulated masonry veneer	385	2x3-L11TM	3N16	1N16	SL82	SL92
	Masonry veneer	—	—	—	—	—	—
	Articulated full masonry	—	—	—	—	—	—
	Full masonry	—	—	—	—	—	—
H2-D	Clad frame	385	2x3-L11TM	3N16	1N16	SL82	SL92
	Articulated masonry veneer (S/S)	460	2x3-L11TM	3N16	1N16	SL82	SL92
	Masonry veneer	—	—	—	—	—	—
	Articulated full masonry	—	—	—	—	—	—
	Full masonry	—	—	—	—	—	—

NOTE: S/S refers to single-storey construction.

FIGURE 3.4 (in part) WAFFLE RAFT

Licensed to Mr Barry Brown on 21 July 2011. 1 user personal user licence only. Storage, distribution or use on network prohibited (10225502).

S02

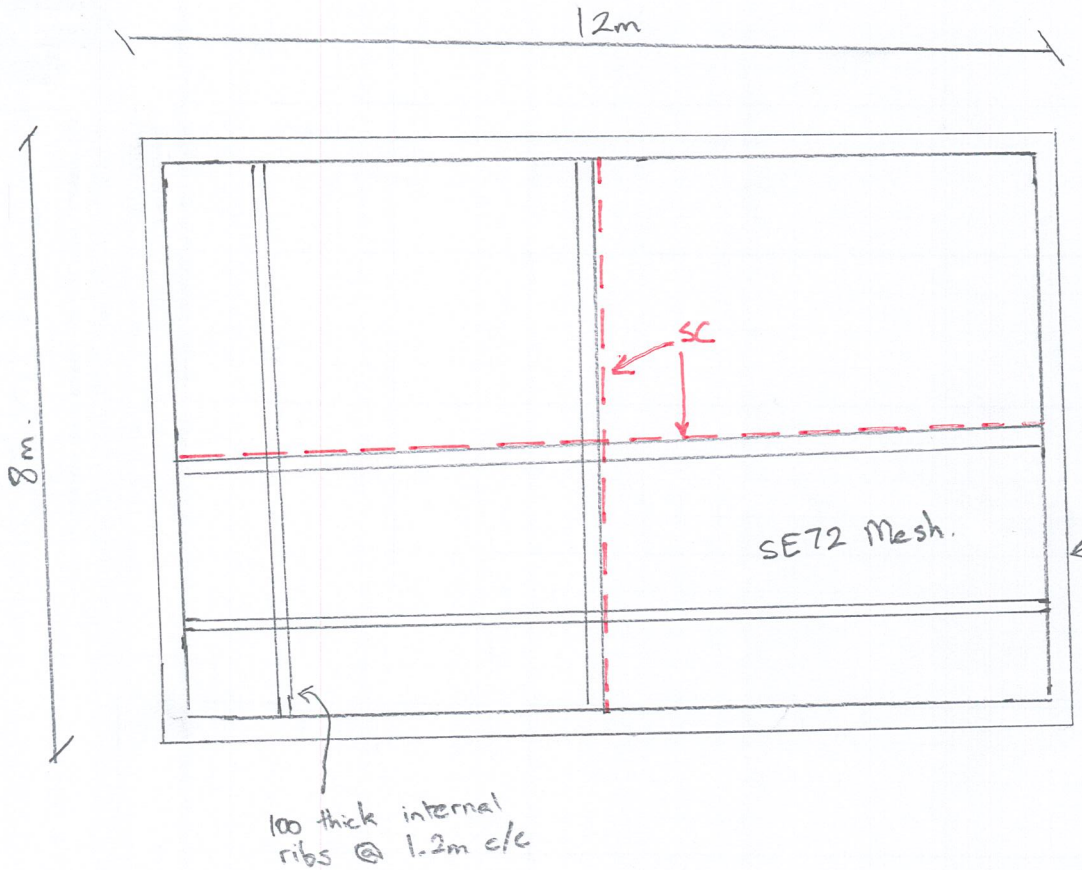

SC = 5mm x 25 deep sawcut.

Perimeter thickening 300 x 320D w/3-HD12 bottom and HD12 top.
Rebate detail where required.

No internal loadbearing thickenings required as roof is loaded to external walls via. trusses.

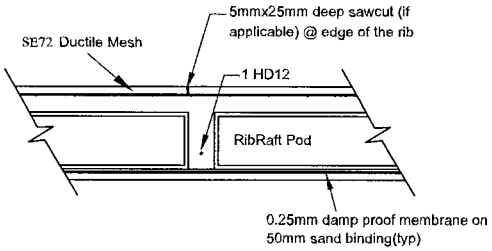

Internal Rib-100 mm Wide

Scale: 1:20

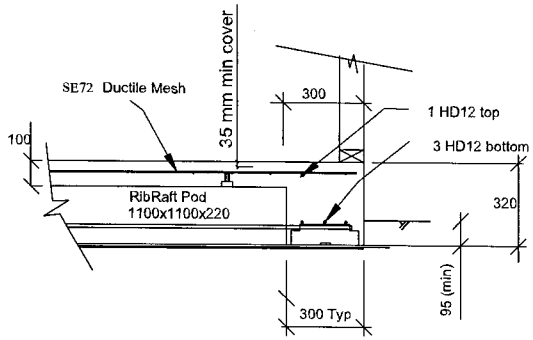

Perimeter edge thickneing

Scale: 1:20

NOTE:

All topsoil and loose material to be removed. Place 100mm layer of well compacted GAP40 before constructing Raft slab.

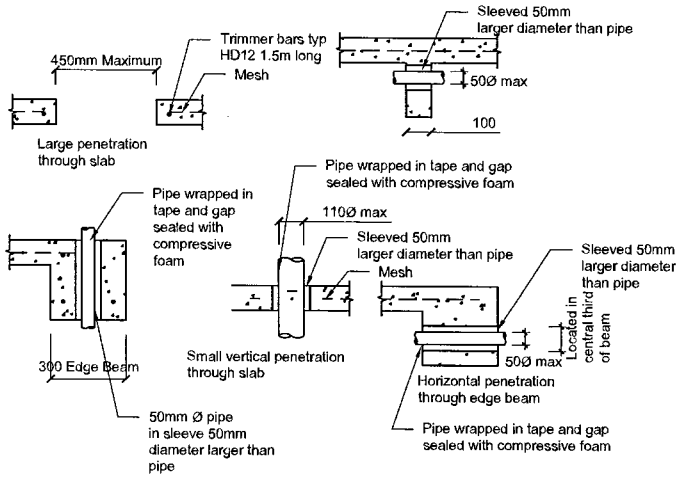

Service Penetration Detail

NTS

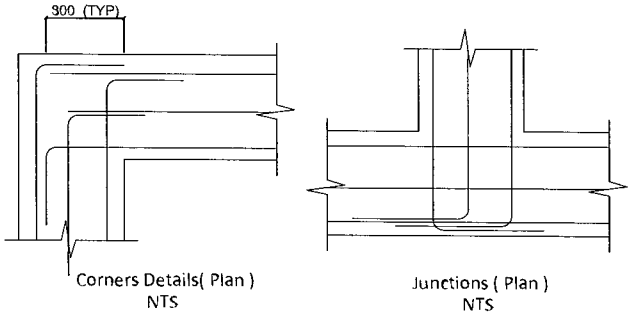

Junction Reinforcement Detail

NTS

CODEMARK®

Certificate No: BRANZ-CM-1002-Rev 1

Date of Issue: 02 March 2021

Recertification Date: 11 January 2022

PRODUCT CERTIFICATE

THIS IS TO CERTIFY

WATERGATE PLUS WALL UNDERLAY

CERTIFICATE HOLDER

Thermakraft

Thermakraft Limited
11 Turin Place
East Tamaki
Auckland, 2013
New Zealand

Tel.: 0800 806 595
Email: info@thermakraft.co.nz
Web: www.thermakraft.co.nz

Client signature

William Lin

Customer Name William Lin
Customer Position Head of Engineering and Inventory
Thermakraft Limited

CERTIFICATION BODY

BRANZ

BRANZ Limited
1222 Moonshine Rd,
RD1, Porirua 5381
Private Bag 50 908
Porirua 5240,
New Zealand

Tel: 04 237 1170
Email: assuranceservices@branz.co.nz
Web: branz.nz

Chelydra Percy
Chief Executive Officer
BRANZ Limited

KEY INFORMATION

1. DESCRIPTION OF BUILDING METHOD OR PRODUCT

1.1 Watergate Plus is a white coloured flexible synthetic wall underlay. The product is printed with the Watergate Plus logo repeated along the length of the roll.

2. USE OF BUILDING METHOD OR PRODUCT

2.1 Watergate Plus is for use as a flexible wall underlay for buildings within the following scope:

- the scope limitations of NZBC Acceptable Solution E2/AS1, Paragraph 1.1 for timber framed buildings; or,
- the scope limitations of NASH Building Envelope Solutions, Paragraph 1.1 for steel framed buildings; and
- with direct fixed wall claddings, or with wall claddings installed over a drained cavity; or,
- with masonry veneer in accordance with NZBC Acceptable Solution E2/AS1 for timber framed buildings or in accordance with NASH Building Envelope Solutions for steel framed buildings; and,
- situated in NZS 3604: 2011 Wind Zones up to and including Very High when fixed directly to framing, and Extra High when fixed over a rigid air barrier.

2.2 Watergate Plus is also for use:

- as an air barrier in accordance with NZBC Acceptable Solution E2/AS1 or NASH Building Envelope Solutions Paragraph 9.1.4 (c); or,
- as a non-rigid backing material for stucco plaster in accordance with the requirements of NZBC Acceptable Solution E2/AS1 or NASH Building Envelope Solutions, Paragraph 9.3.5.1, or;
- as a slip layer over a rigid backing for stucco cladding in accordance with NZBC Acceptable Solution E2/AS1 or NASH Building Envelope Solutions, Paragraph 9.3.3.1 (b).

3. COMPLIES WITH THE FOLLOWING PROVISIONS OF THE NEW ZEALAND BUILDING CODE (NZBC)

Clause B2 DURABILITY: Performance B2.3.1 (a), not less than 50 years (for when the cladding durability requirement is not less than 50 years), B2.3.1 (b), 15 years (for when the cladding durability requirement is 15 years) and B2.3.2 (a).

Clause C3 FIRE AFFECTING AREAS BEYOND THE FIRE SOURCE: Performance C3.4 (c).

Clause E2 EXTERNAL MOISTURE: Performance E2.3.2.

Clause F2 HAZARDOUS BUILDING MATERIALS: Performance F2.3.1.

JAS-ANZ

www.jas-anz.org/register

The Certificate Holder must maintain compliance with the conditions set out in Regulation 15 of the Building (Product Certification) Regulations 2008.

This Certificate is issued by BRANZ Limited, an independent certification body accredited by the product certification body appointed by the Chief Executive of the Ministry of Business, Innovation and Employment (MBIE) under the Building Act 2004. MBIE does not in any way warrant, guarantee or represent that the building method or product the subject of this certificate conforms with the New Zealand Building Code, nor accept any liability arising out of the use of the building method or product. MBIE disclaims, to the extent permitted by law, all liability (including negligence) for claims of losses, expenses, damages and costs arising as a result of the use of the building method(s) or products(s) referred to in this certificate.

It is advised to check that this Product Certificate is currently valid and not withdrawn, suspended or superseded by a later issue, by referring to the MBIE website, www.mbie.govt.nz

This certificate may only be reproduced in its entirety.

Information regarding BRANZ's complaints process can be found at the following link: Complaints Process

CODEMARK®

Certificate No: BRANZ-CM-1002-Rev 1

Date of Issue: 02 March 2021

Recertification Date: 11 January 2022

CERTIFICATE HOLDER

Thermakraft

Thermakraft Limited
11 Turin Place
East Tamaki
Auckland, 2013
New Zealand

Tel.: 0800 806 595
Email: info@thermakraft.co.nz
Web: www.thermakraft.co.nz

Client signature

William Lin

Customer Name William Lin
Customer Position Head of Engineering and Inventory
Thermakraft Limited

CERTIFICATION BODY

BRANZ

BRANZ Limited
1222 Moonshine Rd,
RD1, Porirua 5381
Private Bag 50 908
Porirua 5240,
New Zealand

Tel: 04 237 1170
Email: assuranceservices@branz.co.nz
Web: branz.nz

Chelydra Percy

Chelydra Percy
Chief Executive Officer
BRANZ Limited

4. CONDITIONS AND LIMITATIONS OF USE

4.1 Watergate Plus Wall Underlay must not be exposed to the weather or ultra violet light for more than 60 days before being covered by the wall cladding.

4.2 Framing studs must be at a maximum of 600 mm centres. Timber framing must be in accordance with NZS 3604: 2011 or to a specific design. Steel framing must be in accordance with NASH Building Envelope Solutions.

5. HEALTH AND SAFETY INFORMATION

5.1 Watergate Plus is a synthetic wall underlay. The supplier's instructions and typical practices for working with and handling synthetic wall underlays should be observed.

6. REFERENCE DOCUMENTS

6.1 This Product Certificate must be read in conjunction with:

- BRANZ Appraisal No. 695 (2017) Watergate Plus Wall Underlay.
- Technical Literature: Product Data Sheet Watergate Plus, Issue 8, dated January 2020; and,
- Technical Literature: Installation Guide Watergate Plus, Issue 3, dated December 2020.

SCHEDULE: INFORMATION THAT SUPPORTS KEY INFORMATION

7. SUPPORTING INFORMATION ABOUT DESCRIPTION OF THE BUILDING METHOD

PRODUCT SPECIFICATION

7.1 Watergate Plus is for use as a flexible wall underlay fixed over timber or steel framed walls to limit the entry of wind into building cavities, and to act as a secondary barrier to wind-driven rain.

7.2 Watergate Plus is suitable for use under wall claddings as a wall underlay as called up in NZBC Acceptable Solution E2/AS1 Table 23 for timber framed buildings and NASH Building Envelope Solutions Table 23 for steel framed buildings. This includes non-absorbent wall claddings such as vinyl and metal-based weatherboards in direct fixed situations.

7.3 Watergate Plus is a synthetic building underlay manufactured from a film coated, non-woven, laminated flexible synthetic fabric. Watergate Plus is coloured white on the top and bottom faces and is printed with the Watergate Plus logo, and can also be co-branded with custom printing.

7.4 The product is supplied in rolls 1.370 m wide x 18.5 m, 37.0 m and 73.0 m long; 2.740 m wide x 18.5 m and 36.5 m long. The rolls are wrapped in clear polythene film.

JAS-ANZ

www.jas-anz.org/register

The Certificate Holder must maintain compliance with the conditions set out in Regulation 15 of the Building (Product Certification) Regulations 2008.

This Certificate is issued by BRANZ Limited, an independent certification body accredited by the product certification body appointed by the Chief Executive of the Ministry of Business, Innovation and Employment (MBIE) under the Building Act 2004. MBIE does not in any way warrant, guarantee or represent that the building method or product the subject of this certificate conforms with the New Zealand Building Code, nor accept any liability arising out of the use of the building method or product. MBIE disclaims, to the extent permitted by law, all liability (including negligence) for claims of losses, expenses, damages and costs arising as a result of the use of the building method(s) or products(s) referred to in this certificate.

It is advised to check that this Product Certificate is currently valid and not withdrawn, suspended or superseded by a later issue, by referring to the MBIE website, www.mbie.govt.nz

This certificate may only be reproduced in its entirety.

Information regarding BRANZ's complaints process can be found at the following link: Complaints Process

CODEMARK®

Certificate No: BRANZ-CM-1002-Rev 1

Date of Issue: 02 March 2021

Recertification Date: 11 January 2022

CERTIFICATE HOLDER

Thermakraft

Thermakraft Limited
11 Turin Place
East Tamaki
Auckland, 2013
New Zealand

Tel.: 0800 806 595
Email: info@thermakraft.co.nz
Web: www.thermakraft.co.nz

Client signature

William Lin

Customer Name William Lin
Customer Position Head of Engineering and Inventory
Thermakraft Limited

CERTIFICATION BODY

BRANZ

BRANZ Limited
1222 Moonshine Rd,
RD1, Porirua 5381
Private Bag 50 908
Porirua 5240,
New Zealand

Tel: 04 237 1170
Email: assuranceservices@branz.co.nz
Web: branz.nz

Chelydra Percy
Chief Executive Officer
BRANZ Limited

TABLE 1: NZBC E2/AS1 TABLE 23 (NZS 2295:2006) REQUIREMENTS

NZBC E2/AS1 Table 23 (NZS 2295: 2006) Wall Underlay Properties	**Property Performance Requirement**	**Actual Property Performance**
Vapour Resistance	≤ 7 MN s/g	Pass
Absorbency	≥ 100 g/m²	Pass
Water Resistance	≥ 20 mm	Pass
pH of Extract	≥ 6.0 and ≤ 9.0	Pass
Shrinkage	≤ 0.5%	Pass
Mechanical	Edge tear and tensile strength	Edge tear (Average): Machine direction = 77 N (Note 1) Cross direction = 56 N (Pass) Tensile strength (Average): Machine direction = 2.5 kN/m (Pass) Cross direction = 1.8 kN/m (Pass)
Air Barrier	Air resistance: ≥ 0.1 MN s/m³	Pass. Watergate Plus is suitable for use as an air barrier.

Note 1: Pass of BRANZ criteria for edge tear resistance.

8. SUPPORTING INFORMATION ABOUT INTENDED USE OF THE PRODUCT

DESIGN REQUIREMENTS

8.1 Separation or protection must be provided to Watergate Plus Wall Underlay from heat sources such as fire places, heating appliances, flues and chimneys. Part 7 of NZBC Acceptable Solutions C/AS1, C/AS2 and NZBC Verification Method C/VM1 provide methods for separation and protection of combustible materials from heat sources.

INSTALLATION REQUIREMENTS

8.2 Installation must be carried out in accordance with the following:

- Technical Literature: Product Data Sheet Watergate Plus, Issue 8, dated January 2020; and,
- Technical Literature: Installation Guide Watergate Plus, Issue 3, dated December 2020; and
- NZBC Acceptable Solution E2/AS1; or
- NASH Building Envelope Solutions.

JAS-ANZ

www.jas-anz.org/register

The Certificate Holder must maintain compliance with the conditions set out in Regulation 15 of the Building (Product Certification) Regulations 2008.

This Certificate is issued by BRANZ Limited, an independent certification body accredited by the product certification body appointed by the Chief Executive of the Ministry of Business, Innovation and Employment (MBIE) under the Building Act 2004. MBIE does not in any way warrant, guarantee or represent that the building method or product the subject of this certificate conforms with the New Zealand Building Code, nor accept any liability arising out of the use of the building method or product. MBIE disclaims, to the extent permitted by law, all liability (including negligence) for claims of losses, expenses, damages and costs arising as a result of the use of the building method(s) or products(s) referred to in this certificate.

It is advised to check that this Product Certificate is currently valid and not withdrawn, suspended or superseded by a later issue, by referring to the MBIE website, www.mbie.govt.nz

This certificate may only be reproduced in its entirety.

Information regarding BRANZ's complaints process can be found at the following link: Complaints Process

CODEMARK®

Certificate No: BRANZ-CM-1002-Rev 1

Date of Issue: 02 March 2021

Recertification Date: 11 January 2022

CERTIFICATE HOLDER

Thermakraft

Thermakraft Limited
11 Turin Place
East Tamaki
Auckland, 2013
New Zealand

Tel.: 0800 806 595
Email: info@thermakraft.co.nz
Web: www.thermakraft.co.nz

Client signature

William Lin

Customer Name William Lin
Customer Position Head of Engineering and Inventory
Thermakraft Limited

CERTIFICATION BODY

BRANZ

BRANZ Limited
1222 Moonshine Rd,
RD1, Porirua 5381
Private Bag 50 908
Porirua 5240,
New Zealand

Tel: 04 237 1170
Email: assuranceservices@branz.co.nz
Web: branz.nz

Chelydra Percy
Chief Executive Officer
BRANZ Limited

MAINTENANCE REQUIREMENTS

8.3 No maintenance can be performed on Watergate Plus once the cladding is installed.

BUILDING CODE

B1 STRUCTURE

8.4 Watergate Plus is suitable for use in all Wind Zones of NZS 3604: 2011 up to, and including, Very High when used as a stand-alone flexible wall underlay and all Wind Zones of NZS 3604: 2011 up to, and including, Extra High when used as an overlay for rigid building underlays.

B2 DURABILITY

8.5 Watergate Plus meets code compliance with NZBC Clause B2.3.1 (a), not less than 50 years for building underlays used where the cladding durability requirement or expected serviceable life is not less than 50 years, e.g. behind masonry veneer, and code compliance with NZBC Clause B2.3.1 (b), 15 years for building underlays used where the cladding durability requirement is 15 years. Watergate Plus is expected to have a serviceable life equal to that of the cladding.

C3 FIRE AFFECTING AREAS BEYOND THE FIRE SOURCE

8.6 Watergate Plus has an AS 1530 - 1993 Part 2 flammability index of not greater than 5 and therefore meets the requirements of NZBC Acceptable Solution C/AS2, Paragraph 4.17.8 b) for suspended flexible fabric used as an underlay to exterior cladding that is exposed to view in occupied spaces.

E2 EXTERNAL MOISTURE

8.7 Watergate Plus must be used behind claddings that meet the requirements of the NZBC, such as those covered by NZBC Acceptable Solution E2/AS1 or NASH Building Envelope Solutions.

9. SUPPORTING INFORMATION ABOUT CONDITIONS AND LIMITATIONS OF USE

9.1 All conditions and limitations provided as stated in this Product Certificate.

10. BASIS FOR CODEMARK CERTIFICATION

10.1 The following tests have been carried out on Thermakraft Watergate Plus Wall Underlay in accordance with NZBC Acceptable Solution E2/AS1, Table 23:

- tensile strength, edge-tear resistance and resistance to water vapour transmission in accordance with AS/NZS 4200.1: 1994
- shrinkage in accordance with AS/NZS 4201.3:1994
- resistance to water penetration in accordance with AS/NZS 4201.4: 1994
- surface water absorbency in accordance with AS/NZS 4201.6: 1994
- pH of extract in accordance with AS/NZS 1301.421s: 1998
- air resistance to BS 6538.3:1987.

10.2 Ultraviolet (UV) light ageing of wall underlays is a critical evaluation requirement to verify a products continued performance after site construction exposure. UV aging of Watergate Plus equivalent to 60 days construction site exposure was completed and the range of tests detailed above were repeated after aging.

10.3 The Flammability Index of Thermakraft Watergate Plus Wall Underlay has been evaluated in accordance with AS 1530.2 - 1993.

10.4 BRANZ Expert Judgement (Materials Scientist) confirmation of compliance to the NZBC Clause B2 Durability Performance Requirements.

10.5 The practicability of installation of Thermakraft Watergate Plus Wall Underlay has been assessed by BRANZ and found to be satisfactory.

10.6 The referenced Technical Literature has been examined by BRANZ and found to be satisfactory.

JAS-ANZ

www.jas-anz.org/register

The Certificate Holder must maintain compliance with the conditions set out in Regulation 15 of the Building (Product Certification) Regulations 2008.

This Certificate is issued by BRANZ Limited, an independent certification body accredited by the product certification body appointed by the Chief Executive of the Ministry of Business, Innovation and Employment (MBIE) under the Building Act 2004. MBIE does not in any way warrant, guarantee or represent that the building method or product the subject of this certificate conforms with the New Zealand Building Code, nor accept any liability arising out of the use of the building method or product. MBIE disclaims, to the extent permitted by law, all liability (including negligence) for claims of losses, expenses, damages and costs arising as a result of the use of the building method(s) or products(s) referred to in this certificate.

It is advised to check that this Product Certificate is currently valid and not withdrawn, suspended or superseded by a later issue, by referring to the MBIE website, www.mbie.govt.nz

This certificate may only be reproduced in its entirety.

Information regarding BRANZ's complaints process can be found at the following link: Complaints Process

CODEMARK®

Certificate No: BRANZ-CM-1002-Rev 1

Date of Issue: 02 March 2021

Recertification Date: 11 January 2022

CERTIFICATE HOLDER

Thermakraft

Thermakraft Limited
11 Turin Place
East Tamaki
Auckland, 2013
New Zealand

Tel.: 0800 806 595
Email: info@thermakraft.co.nz
Web: www.thermakraft.co.nz

Client signature

William Lin

Customer Name William Lin
Customer Position Head of Engineering and Inventory
Thermakraft Limited

CERTIFICATION BODY

BRANZ

BRANZ Limited
1222 Moonshine Rd,
RD1, Porirua 5381
Private Bag 50 908
Porirua 5240,
New Zealand

Tel: 04 237 1170
Email: assuranceservices@branz.co.nz
Web: branz.nz

Chelydra Percy
Chief Executive Officer
BRANZ Limited

11. RESPONSIBILITIES FOR USE OF CERTIFIED PRODUCT

- The quality of supply to the market is the responsibility of Thermakraft Limited.
- Building designers are responsible for the design of the building, and for the incorporation of the wall underlay into their design in accordance with the instructions of Thermakraft Limited.
- Quality of installation is the responsibility of the installer in accordance with the instructions of Thermakraft Limited.

12. DOCUMENTATION SUPPORTING CERTIFICATION

- AS 1530.2 – 1993 Test for flammability of materials.
- AS/NZS 1301.421s: 1998 Determination of the pH value of aqueous extracts of paper, board and pulp – cold extraction method.
- AS/NZS 4200.1: 1994 Pliable building membranes and underlays – materials.
- AS/NZS 4201.1: 1994 Pliable building membranes and underlays – Methods of test – Resistance to dry delamination.
- AS/NZS 4201.2: 1994 Pliable building membranes and underlays – Methods of test – Resistance to wet delamination.
- AS/NZS 4201.3: 1994 Pliable building membranes and underlays – Methods of test – Shrinkage.
- AS/NZS 4201.4: 1994 Pliable building membranes and underlays – Methods of test – Resistance to water penetration.
- AS/NZS 4201.6: 1994 Pliable building membranes and underlays – Methods of test – Surface water absorbency.
- ASTM D882:2012 Standard test method for tensile properties of thin plastic sheeting.
- ASTM E96/E96M:2016 Standard test methods for water vapor transmission of materials.
- ASTM G155:2013 Standard practice for operating xenon arc light apparatus for exposure of non-metallic underlays.
- BS 6538.3: 1987 Method for determination of air permeance using the Garley apparatus.
- NZS 2295: 2006 Pliable, permeable building underlays.
- NZS 3604: 2011 Timber-framed buildings.
- TAPPI T470:1986 Edge tearing resistance of paper (Edge-tear stirrup method)
- Ministry of Business, Innovation and Employment Record of amendments - Acceptable Solutions, Verification Methods and handbooks.
- The Building Regulations 1992.

13. CONDITIONS RELATING TO NOTIFICATION

13.1 The certificate holder Thermakraft Ltd must notify the product certification body (BRANZ) in writing, of any intended change to any of the following particulars:

- The name, address, or contact details of the certificate holder;
- Any address of a location where a certified product is produced or manufactured.

13.2 The certificate holder shall notify the Product Certification body in writing of any intended change, modification, or alteration to any of the following:

- The certified building method or product;
- The method of its production or manufacture;
- The Product Quality Plan prepared in respect of the certified building method or product;
- The application or installation instructions for the certified building method or product;
- Any documentation relating to the use and maintenance of the certified building method or product.

JAS-ANZ

www.jas-anz.org/register

The Certificate Holder must maintain compliance with the conditions set out in Regulation 15 of the Building (Product Certification) Regulations 2008.

This Certificate is issued by BRANZ Limited, an independent certification body accredited by the product certification body appointed by the Chief Executive of the Ministry of Business, Innovation and Employment (MBIE) under the Building Act 2004. MBIE does not in any way warrant, guarantee or represent that the building method or product the subject of this certificate conforms with the New Zealand Building Code, nor accept any liability arising out of the use of the building method or product. MBIE disclaims, to the extent permitted by law, all liability (including negligence) for claims of losses, expenses, damages and costs arising as a result of the use of the building method(s) or products(s) referred to in this certificate.

It is advised to check that this Product Certificate is currently valid and not withdrawn, suspended or superseded by a later issue, by referring to the MBIE website, www.mbie.govt.nz

This certificate may only be reproduced in its entirety.

Information regarding BRANZ's complaints process can be found at the following link: Complaints Process

CODEMARK®

Certificate No: BRANZ-CM-1002-Rev 1

Date of Issue: 02 March 2021

Recertification Date: 11 January 2022

CERTIFICATE HOLDER

Thermakraft

Thermakraft Limited
11 Turin Place
East Tamaki
Auckland, 2013
New Zealand

Tel.: 0800 806 595
Email: info@thermakraft.co.nz
Web: www.thermakraft.co.nz

Client signature

William Lin

Customer Name William Lin
Customer Position Head of Engineering and Inventory
Thermakraft Limited

CERTIFICATION BODY

BRANZ

BRANZ Limited
1222 Moonshine Rd,
RD1, Porirua 5381
Private Bag 50 908
Porirua 5240,
New Zealand

Tel: 04 237 1170
Email: assuranceservices@branz.co.nz
Web: branz.nz

Chelydra Percy
Chief Executive Officer
BRANZ Limited

13.3 If the certificate holder has any reason to suspect that the certified building method or product does not comply with the Building Code, the certificate holder shall notify the product certification body in writing of the reason for that suspicion.

13.4 If the certificate holder or the product certification body finds that a certified building method or product that has been released on the market does not comply with the Building Code, the certificate holder shall disclose that fact in a published disclosure statement in a form that is acceptable to the product certification body and to MBIE.

13.5 If the certificate is suspended or revoked, the certificate holder—

- Shall notify all customers to whom the building method or product is regularly supplied; and
- Immediately cease using the certificate, the mark of conformity, and any reference to the number of this certificate.

JAS-ANZ

www.jas-anz.org/register

The Certificate Holder must maintain compliance with the conditions set out in Regulation 15 of the Building (Product Certification) Regulations 2008.

This Certificate is issued by BRANZ Limited, an independent certification body accredited by the product certification body appointed by the Chief Executive of the Ministry of Business, Innovation and Employment (MBIE) under the Building Act 2004. MBIE does not in any way warrant, guarantee or represent that the building method or product the subject of this certificate conforms with the New Zealand Building Code, nor accept any liability arising out of the use of the building method or product. MBIE disclaims, to the extent permitted by law, all liability (including negligence) for claims of losses, expenses, damages and costs arising as a result of the use of the building method(s) or products(s) referred to in this certificate.

It is advised to check that this Product Certificate is currently valid and not withdrawn, suspended or superseded by a later issue, by referring to the MBIE website, www.mbie.govt.nz

This certificate may only be reproduced in its entirety.

Information regarding BRANZ's complaints process can be found at the following link: Complaints Process

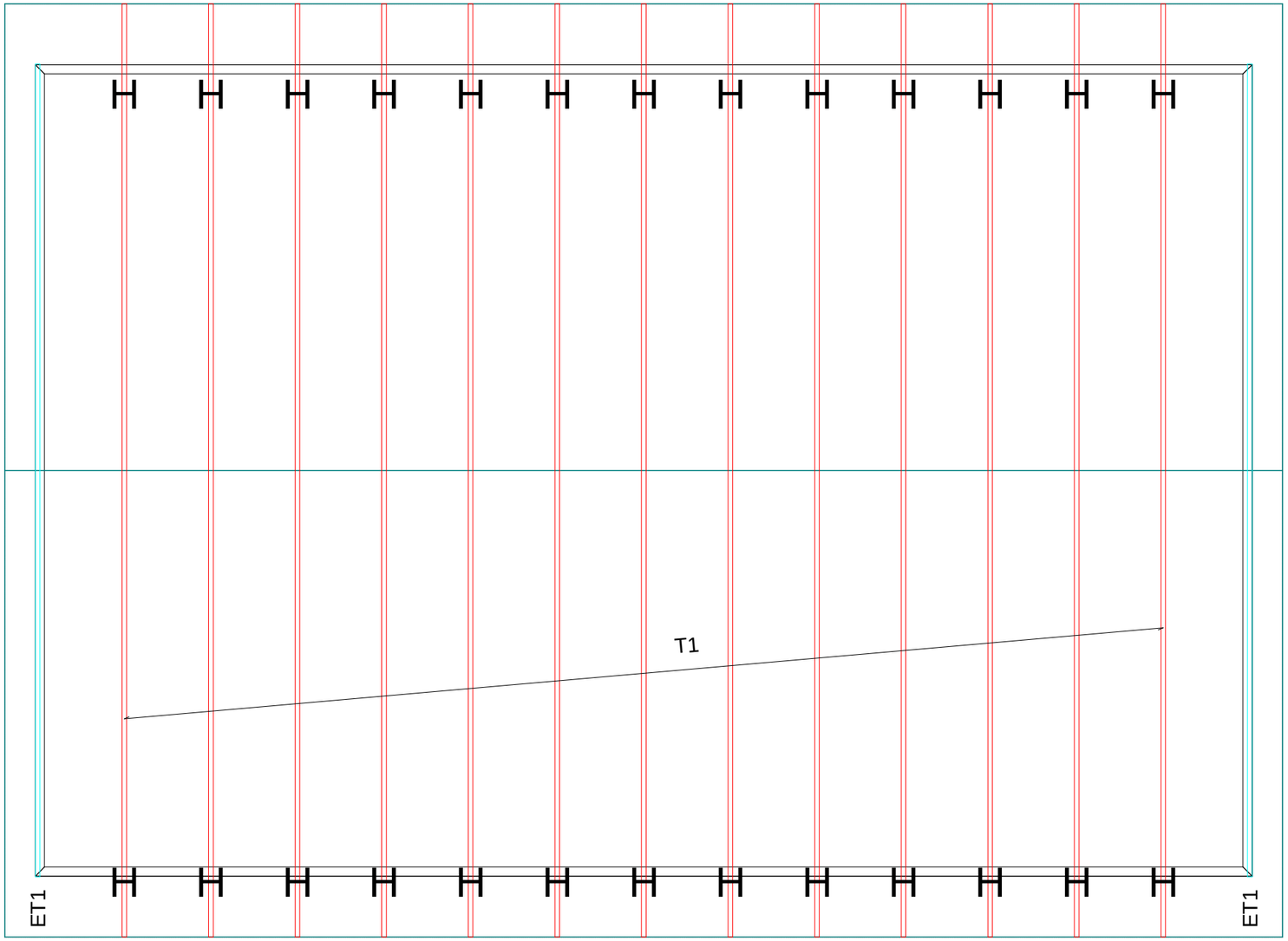

Buildable Truss Layout
for consent purposes only.
Not for construction.

All walls drawn assumed load bearing

NOTES
Roof & Ceiling bracing
as per permit plans otherwise
to comply with NZS3604

Builder to confirm all soffit details
with Fascia manufacturer.

All members requiring bastard cuts
are left long for builder to cut on site.

KEY TO TRUSS FIXINGS:

D - Pair of LUMBERLOK Wire Dogs
X - LUMBERLOK JH47x90 Joist Hanger
Z - LUMBERLOK JH47x120 Joist Hanger
P - LUMBERLOK JH47x190 Joist Hanger
E - LUMBERLOK JH95x165 Joist Hanger
O - Pair of LUMBERLOK CT200 Ceiling Ties
H - LUMBERLOK CT400 Cyclone Tie
M - Pair of LUMBERLOK Multi Grips
S1 - SPH140 LUMBERLOK Split Hangers
S2 - SPH180 LUMBERLOK Split Hangers
S3 - SPH220 LUMBERLOK Split Hangers
K - LUMBERLOK TTP 16kN Truss to Top Plate set

ALL GABLE END TRUSSES TO USE WIRE DOG [STAPLE] EITHER END. BALANCE of TRUSSES to USE 2/WIRE DOGS EITHER END, OR AS APPLICABLE. JACK RAFTERS & HIP BLADES TO USE 2/90x3.15mm dia SKEW NAILS UNLESS OTHERWISE NOTED

FTMA NEW ZEALAND

DISCLAIMER:
Dysart Manufacturing Ltd will not consider any claims for the correction of any pre-cut errors unless prior consultation has taken place and approval has been granted. Dysart Manufacturing Limited does not agree to pay any waiting time.

Roof Material = Light
Ceiling Material = Standard
on Ex 75x40 strapping @ 400 ctrs
Pitch = 15.0 deg
Design Wind Velocity = 44.0 (m/s)
Overhang = 300 / 600
Fascia Type = Selected Fascia
Treatment = H1.2 to all Trusses & BoR

DYSART

Dysart Manufacturing Ltd
88 Merton Road, Glen Innes

Phone: (09) 521-3609
(Press 2 for Manufacturing)

MiTek

PROJECT
HABITECH
752 SETTLEMENT RD
KAIWAKA

DRAWING TITLE;
ROOF LAYOUT PLAN

SCALE	DESIGN	DATE
NTS		20 Aug,2021

DRAWING No.	DRAWN	REVISION
0949-21	Andy Hackshaw	

MiTek New Zealand Limited

Correspondence from : **AUCKLAND**
40 Neales Road, East Tamaki 2013
PO Box 58-014, Botany 2163
Phone: 09 274 7109
Fax: 09 274 7100

CHRISTCHURCH
14 Pilkington Way, Wigram 8042
PO Box 8387, Riccarton 8440
Phone: 03 348 8691
Fax: 03 348 0314

www.miteknz.co.nz

PRODUCER STATEMENT for MiTek 20/20® TRUSS DESIGN - Version 4.7

ISSUED BY: **MiTek New Zealand Limited**

TO: **Dysart Manufacturing, (09) 521 3609**

IN RESPECT OF: **MiTek® Truss Designs**

This producer statement covers the MiTek 20/20® truss design and the structural performance of the GANG-NAIL® connector plate for the job reference **0949-21** and may be used by a Building Consent Authority to assist in determining compliance with the New Zealand Building Code.

The MiTek 20/20® truss design program has been developed by MiTek New Zealand Limited for the design of MiTek® timber roof, floor and attic trusses in New Zealand. The truss designs computed by MiTek 20/20 ® are prepared using sound and widely accepted engineering principles, and in accordance with compliance documents of the New Zealand Building Code and Verification Method B1/VM1; and internationally accepted standard ANSI/TPI 1 - 2002 as an alternative solution, to satisfy the requirements of Clause B1 of the New Zealand Building Code.

On behalf of MiTek New Zealand Limited, and subject to:

i) All proprietary products meeting their performance specification requirements
ii) The provision of adequate roof bracing and overall building stability
iii) Correct selection and placement of GANG-NAIL connector plates
iv) Correct input of Truss Design Data as shown in the Fabricator Design Statement for this job
v) The design being undertaken by the accredited fabricator under the terms of the software licence
vi) Timber is graded to the requirements of NZS 3603:1993
vii) Minimum timber treatment for these MiTek® trusses shall be in accordance with B2/AS1 Table 1A and the relevant sections of NZS 3602:2003

I believe on reasonable grounds that the trusses, if constructed in accordance with the MiTek 20/20® truss design and shop drawings, will comply with the relevant provisions of the New Zealand Building Code.

MiTek New Zealand Limited holds a current policy of Professional Indemnity Insurance no less than $500,000.

On behalf of MiTek New Zealand Limited, **Date: Friday, 20 August 2021**

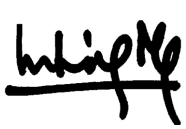

In Ling Ng, BE (Hons), CPEng, IntPE, MIPENZ (ID: 146585)
TECHNICAL SERVICES MANAGER, MiTek New Zealand Limited

MITEK FABRICATOR DESIGN STATEMENT

This statement is issued by MiTek accredited fabricator **Dysart Manufacturing, (09) 521 3609**, being licensed to use the MiTek 20/20® software, to the client listed above and may be used by the Building Consent Authority to assist in determining compliance with the New Zealand Building Code.

MiTek 20/20® TRUSS DESIGN DATA

The MiTek 20/20® computer design for this job is based on the following design parameters entered into the program. The Fabricator shall ensure that these job details are current and relevant to the project for the design of the MiTek ® trusses.

Job Details

Importance Level : 2

Design Working Life : 50 years

Roof Truss

Timber Group:	Dysart Truss H1.2	Pitch:	15.000 deg	Nominal Overhang:	600 mm
Roof		**Ceiling**		**Wind**	
Material:	Light	Material:	Standard	Area:	High (44.0 m/s)
Dead Load:	0.250 kPa	Dead Load:	0.200 kPa	Pressure Coeff:	Cpe = varies; Cpi = -0.30, 0.20
Restraints:	1200 mm centres	Restraints:	400 mm centres		
Live Load:	Qur = 0.250 kPa Qc = 1.100 kN	Live Load:	Qc = 1.400 kN		

The minimum timber treatment for these MiTek® trusses shall be in accordance with B2/AS1 Table 1A and the relevant sections of NZS 3602:2003. The timber for these MiTek® trusses shall be graded to the requirements of NZS 3603:1993. Proprietary fixings and timber connectors shall be selected in accordance with NZS3604:2011 Section 4 - Durability.

MiTek® Truss List

Legend: * = detail only, ? = input only, ~~Txx~~ = failed design, Ø = non certified, Unmarked trusses = designed successfully, LB = lateral bracing required
GB = gable brace required

Truss	Qty	Span (mm)	Pitch (deg)	Spacing (mm)
T1	13	8000	15.000	854
ET1	2	8015	15.000	854

Total quantity : 15

The computer design input has been carried out by:

Signed: .....

Date: ...Friday, 20 August 2021....

Name of Detailer: Andy Hackshaw

Qualifications and Title:

On behalf of: Dysart Manufacturing, (09) 521 3609

BRANZ Appraised
Appraisal No. 764 [2017]

SHADOWCLAD® VENTILATED CAVITY CLADDING SYSTEM



Appraisal No. 764 (2017)

This Appraisal replaces BRANZ Appraisal No. 764 (2011)

Amended 1 March 2021

BRANZ Appraisals

Technical Assessments of products for building and construction.

Carter Holt Harvey Plywood Ltd
Private Bag 92-106
Auckland
Tel: 0800 326 759
Fax: 09 633 1582
Web: www.chhply.co.nz

BRANZ
1222 Moonshine Rd,
RD1, Porirua 5381
Private Bag 50 908
Porirua 5240,
New Zealand
Tel: 04 237 1170
branz.co.nz

Product

1.1 Shadowclad® Ventilated Cavity is a cavity-based external wall cladding system for residential and light commercial type buildings where domestic construction techniques are used.

1.2 The system consists of Shadowclad® sheets, timber cavity battens, flashings and accessories and is finished with either an acrylic paint system or penetrating, or film forming stain.

1.3 Shadowclad® Ventilated Cavity incorporates a primary and secondary means of weather resistance (first and second line of defence) against water penetration by separating the cladding from the external wall frame with a nominal 20 mm drained cavity.

Scope

2.1 Shadowclad® Ventilated Cavity has been appraised as an external wall cladding for buildings within the following scope:

- the scope limitations of NZBC Acceptable Solution E2/AS1, Paragraph 1.1; and,
- constructed with timber framing complying with the NZBC; and,
- with a risk score of 0-20, calculated in accordance with NZBC Acceptable Solution E2/AS1, Table 2; and, The use of dark colours with an LRV of less than 50 and failure to adequately maintain them increases the risk of aesthetic related issues such as face checking. For this reason CHH Plywood does not support the use of dark colours on Shadowclad exterior cladding.
- situated in NZS 3604 Wind Zones up to, and including Extra High; and,
- with a building height of ≤ 10 m and at a distance of ≥ 1.0 m to the relevant boundary.

2.2 Shadowclad® Ventilated Cavity has also been appraised as an external wall cladding for specifically designed buildings within the following scope:

- the scope limitations of NZBC Acceptable Solution E2/AS1, Paragraph 1.1; and,
- constructed with timber framing complying with the NZBC; and,
- situated in specific design wind pressures up to a maximum design differential ultimate limit state (ULS) of 2.5 kPa; and,
- with a building height of ≤ 10 m and at a distance of ≥ 1.0 m to the relevant boundary.

2.3 Shadowclad® Ventilated Cavity is appraised for use with aluminium window and door joinery that is installed with vertical jambs and horizontal heads and sills. *[The Appraisal of Shadowclad® Ventilated Cavity relies on the joinery meeting the requirements of NZS 4211 for the relevant Wind Zone or wind pressure.]*

Readers are advised to check the validity of this Appraisal by referring to the Valid Appraisals listing on the BRANZ website, or by contacting BRANZ.

Building Regulations

New Zealand Building Code (NZBC)

3.1 **In the opinion of BRANZ, Shadowclad® Ventilated Cavity, if designed, used, installed and maintained in accordance with the statements and conditions of this Appraisal, will meet the following provisions of the NZBC:**

Clause B1 STRUCTURE: Performance B1.3.1, B1.3.2 and B1.3.4. Shadowclad® Ventilated Cavity meets the requirement for loads arising from self-weight, wind, impact and creep [i.e. B1.3.3 (a), (f), (j) and (q)]. See Paragraphs 9.1 – 9.3.

Clause B2 DURABILITY: Performance B2.3.1 (b), 15 years, and B2.3.2. Shadowclad® Ventilated Cavity meets these requirements. See Paragraphs 10.1 - 10.5.

Clause E2 EXTERNAL MOISTURE: Performance E2.3.2. Shadowclad® Ventilated Cavity meets this requirement. See Paragraphs 14.1 - 14.5.

Clause F2 HAZARDOUS BUILDING MATERIALS: Performance F2.3.1. Shadowclad® Ventilated Cavity meets this requirement and will not present a health hazard to people.

Technical Specification

4.1 System components and accessories supplied by Carter Holt Harvey Plywood Limited are as follows:

Shadowclad® Sheets

- Shadowclad® sheets are nominal 12 mm thick structural plywood sheets manufactured from New Zealand pinus radiata veneers. They are 1216 mm wide and either 2440 mm or 2745 mm long. They have a textured surface finish on the exposed face.
- Shadowclad® sheets are available as either Shadowclad® Natural or Shadowclad® Ultra finish. Shadowclad® Natural is an uncoated panel for use with penetrating stains, film forming stains and paints. Shadowclad® Ultra has a factory applied powder coat exterior primer for use with paints and film forming stain topcoats. Shadowclad® Ultra is not suitable for use with penetrating stains.
- Shadowclad® Natural and Shadowclad® Ultra are both available as Texture and Texture Groove surface finish. Texture Groove has 9 mm wide by 5 mm deep grooves at 150 mm centres running vertically down the outside face of the sheet.
- Shadowclad® Natural sheets are available as Hazard Class H3.1 treated only. Shadowclad® Ultra sheets are available in either H3.1 or H3.2 CCA treated.

Shadowclad® Accessories

- **Shadowclad® flashings:** horizontal 'Z' flashing, inter-storey 'Z' flashing, internal 90° angle, internal 'W' angle, large internal 'W' angle, external box angle, large external box angle and flat flashing for vertical negative detail. Shadowclad® flashings are available in extruded aluminium and folded stainless steel.
- **Cavity vent strip**: manufactured from aluminium or stainless steel, available in 3600 mm lengths.

4.2 Accessories used with Shadowclad® Ventilated Cavity which are supplied by the building contractor are:

- **Shadowclad® sheet fixings:** 60 x 2.8 mm hot-dip galvanised or ring shank stainless steel flat head nails, 8 gauge x 65 mm AS 3566 Corrosion Class 4 mechanically zinc plated wood screws or 8 gauge x 65 mm stainless steel wood screws. *(Note: Stainless steel fixings must be Grade 316 and hot-dip galvanising must comply with AS/NZS 4680).*
- **Exterior Battens:** 65 mm wide x 18 mm thick timber batten, dressed or bandsawn, treated to Hazard Class H3.1 and with 6 x 6 mm weathergrooves.
- **Cavity battens:** nominal 45 mm wide x 20 mm thick or 75 mm wide x 20 mm thick merchant grade timber treated to Hazard Class H3.1.
- **Cavity batten fixings:** 40 x 2.5 mm hot-dip galvanised or stainless steel ring shank flat head nails.

Readers are advised to check the validity of this Appraisal by referring to the Valid Appraisals listing on the BRANZ website, or by contacting BRANZ.

- **Flexible wall underlay:** wall underlay complying with NZBC Acceptable Solution E2/AS1, Table 23, or breather-type membranes covered by a valid BRANZ Appraisal for use as wall underlay.
- **Rigid wall underlay:** sheet complying with NZBC Acceptable Solution E2/AS1, Table 23, or rigid sheathing covered by a valid BRANZ Appraisal for use as rigid air barrier systems.
- **Brush on timber preservative:** brush on timber preservatives as listed in the Technical Literature for Shadowclad® Ventilated Cavity.
- **Flexible flashing tape:** flexible flashing tapes complying with NZBC Acceptable Solution E2/AS1, Paragraph 4.3.11, or flexible flashing tapes covered by a valid BRANZ Appraisal for use around window and door joinery openings.
- **Window and door trim cavity air seal:** air seals complying with NZBC Acceptable Solution E2/AS1, Paragraph 9.1.6, or self-expanding, moisture cure polyurethane foam air seals covered by a valid BRANZ Appraisal suitable for use around window, door and other wall penetration openings.
- **Joinery head flashings:** folded from aluminium or galvanised steel to suit the window or door trim opening. Refer to NZS 3604, Section 4 and NZBC Acceptable Solution E2/AS1, Table 20 for durability requirements.
- **Flexible sealant:** sealant complying with NZBC Acceptable Solution E2/AS1, or sealant covered by a valid BRANZ Appraisal for use as a weather sealing sealant for exterior use.

Finishing System Specification

4.3 Paint and stain systems are not supplied by Carter Holt Harvey Plywood Limited and have not been assessed by BRANZ and are therefore outside the scope of this Appraisal.

4.4 All exposed faces, including top edges at sills and all bottom edges of Shadowclad® sheets must be finished with a latex exterior paint system complying with any of Parts 7, 8, 9, or 10 of AS 3730, or at least two coats of a film forming or penetrating stain to protect the Shadowclad® and give the desired finish colour to the exterior walls.

[Note: Carter Holt Harvey Plywood Limited does not recommend that Shadowclad® is left uncoated when used as an exterior cladding. Using dark colours with an LRV of less than 50%, and failure to adequately maintain the surface coating of the cladding increases the risk of aesthetic related issues such as face checking. For this reason, Carter Holt Harvey Plywood Limited does not support the use of dark colours on Shadowclad® exterior cladding.]

Handling and Storage

5.1 Handling and storage of all materials supplied by Carter Holt Harvey Plywood Limited or the building contractor, whether on-site or off-site, is under the control of the building contractor. Shadowclad® sheets must be stacked flat, clear of the ground on at least three evenly spaced timber bearers. They must be kept dry at all times either by storing within an enclosed building or under cover when stored externally. Care must be taken to avoid damage to edges, ends and the primed surfaces.

5.2 Accessories must be stored so they are kept clean, dry and undamaged. All accessories must be used within the maximum storage period recommended by the manufacturer.

Technical Literature

6.1 Refer to the Appraisals listing on the BRANZ website for details of the current Technical Literature for Shadowclad® Ventilated Cavity. The Technical Literature must be read in conjunction with this Appraisal. All aspects of design, use, installation and maintenance contained in the Technical Literature and within the scope of this Appraisal must be followed.

Readers are advised to check the validity of this Appraisal by referring to the Valid Appraisals listing on the BRANZ website, or by contacting BRANZ.

Design Information

Framing

Timber Treatment

7.1 Timber wall framing behind Shadowclad® Ventilated Cavity must be treated as required by NZBC Acceptable Solution B2/AS1.

Timber Framing

7.2 Timber framing must comply with NZS 3604 for buildings or parts of buildings within the scope limitations of NZS 3604. Buildings or parts of buildings outside the scope of NZS 3604 must be to a specific design in accordance with NZS 3603 and AS/NZS 1170. Where specific design is required, the framing must be of at least equivalent stiffness to the framing provisions of NZS 3604. In all cases studs must be at maximum 600 mm centres. Dwangs must be fitted flush between the studs at maximum 800 mm centres.

7.3 Additional framing may be required at soffits, internal and external corners and window and door openings for the support and fixing of cavity battens and Shadowclad® Ventilated Cavity.

7.4 Timber wall framing and cavity battens must have a maximum moisture content of 20% at the time of the cladding application. *(Note: If Shadowclad® is fixed to framing with a moisture content of greater than 20% problems may occur at a later date due to excessive timber shrinkage.)*

General

8.1 When Shadowclad® Ventilated Cavity is used for specifically designed buildings up to 2.5 kPa design differential ULS wind pressure, only the weathertightness aspects of the cladding and maximum framing centres are within the scope of this Appraisal. All other aspects of the building need to be specifically designed and are outside the scope of this Appraisal.

8.2 Punchings in the cavity vent strip provide a minimum ventilation opening area of 1000 mm^2 per lineal metre of wall in accordance with the requirements of NZBC Acceptable Solution E2/AS1, Paragraph 9.1.8.3 (b).

8.3 The ground clearance to finished floor levels as set out in NZS 3604 must be adhered to at all times. At ground level, paved surfaces such as footpaths must be kept clear of the bottom edge of the cladding system by a minimum of 100 mm, and unpaved surfaces by 175 mm in accordance with the requirements of NZBC Acceptable Solution E2/AS1, Table 18.

8.4 At balcony, deck or roof/wall junctions, the bottom edge of Shadowclad® Ventilated Cavity must be kept above the top surface of any adjacent roof flashing by a minimum of 35 mm in accordance with NZBC Acceptable Solution E2/AS1, Paragraph 9.1.3.

8.5 All external walls of buildings must have barriers to airflow in the form of interior linings with all joints stopped for wind zones up to and including Very High, and rigid underlays for buildings in the Extra High wind zone and specifically designed buildings up to 2.5 kPa design differential ULS wind pressure. Unlined gables and walls must incorporate a rigid sheathing or an air barrier which meets the requirements of NZBC Acceptable Solution E2/AS1, Table 23. For attached garages, wall underlays must be selected in accordance with NZBC Acceptable Solution E2/AS1, Paragraph 9.1.3.4. Where rigid underlays are used, the cavity batten fixing lengths must be increased by a minimum of the thickness of the underlay.

8.6 Where cladding penetrations are wider than the cavity batten spacing, allowance must be made for airflow between adjacent cavities by leaving a minimum gap of 10 mm between the bottom of the cavity and the flashing to the opening.

8.7 Where the system abuts other cladding systems, designers must detail the junction to meet their own requirements and the performance requirements of the NZBC. These details have not been assessed and are outside the scope of this Appraisal.

Readers are advised to check the validity of this Appraisal by referring to the Valid Appraisals listing on the BRANZ website, or by contacting BRANZ.

Inter-storey Junctions

8.8 Inter-storey junctions must be constructed in accordance with the Technical Literature. Inter-storey joints must be provided to limit continuous cavities to the lesser of 2-storeys or 7 metres in height, in accordance with the requirements of NZBC Acceptable Solution E2/AS1, Paragraph 9.1.9.4 (b).

Structure

Mass

9.1 The mass of Shadowclad® Ventilated Cavity is approximately 6.6 kg/m^2 at equilibrium moisture content. The system is therefore considered a lightweight cladding in terms of NZS 3604.

Impact Resistance

9.2 Shadowclad® Ventilated Cavity has good resistance to impact loads likely to be encountered in normal residential use. The likelihood of impact damage to Shadowclad® Ventilated Cavity when used in light commercial situations should be considered at the design stage, and appropriate protection such as the installation of bollards and barriers should be considered for vulnerable areas.

Wind Zones

9.3 Shadowclad® Ventilated Cavity is suitable for use in all Building Wind Zones of NZS 3604, up to and including Extra High where buildings are designed to meet the requirements of NZBC Acceptable Solution E2/AS1, Paragraph 1.1, or up to 2.5 kPa design differential ULS wind pressure where buildings are specifically designed.

Durability

10.1 Shadowclad® Ventilated Cavity meets the performance requirements of NZBC Clause B2.3.1 (b), 15 years for the Shadowclad® and flashings when used as a non-structural cladding installed in accordance with the Technical Literature.

10.2 Shadowclad® is envelope preservative treated. Where sheets are cut, all cuts must be coated with a brush on timber preservative specified in the Technical Literature for Shadowclad® Ventilated Cavity. Failure to correctly apply preservative to these areas may negatively affect the durability of the cut sheets.

Serviceable Life

10.3 Shadowclad® Ventilated Cavity installations finished with penetrating stain or non-penetrating film forming stain, are expected to have a serviceable life of at least 15 years provided they are maintained in accordance with this Appraisal. *[Note: This opinion only covers serviceability with regards to structural and weathertightness performance. It does not cover appearance, which may deteriorate significantly, especially when proper and regular maintenance is not carried out. Carter Holt Harvey Plywood Limited does not recommend that Shadowclad be left uncoated when used as an exterior cladding.]*

10.4 The use of dark colours with an LRV of less than 50 and failure to adequately maintain the coating increases the risk of aesthetic related issues such as face checking. For this reason Carter Holt Harvey Plywood Limited does not support the use of dark colours on Shadowclad® exterior cladding.

10.5 Coastal locations can be very corrosive to fasteners, especially locations within distances of up to 500 m from the sea including harbours, or 100 metres from tidal estuaries and sheltered inlets, and otherwise as shown in NZS 3604, Figure 4.2. These coastal locations are defined in NZS 3604 as Zone D. It is recommended that Shadowclad® sheets be fixed with stainless steel fasteners in these situations.

10.6 When using CCA treated Shadowclad®, aluminium extrusions must be coated in accordance with the requirements of NZBC E2/AS1, Table 20, and are not suitable for use in NZS 3604 Corrosion Zone D. When used with CCA treated Shadowclad®, horizontal Z-flashings must be manufactured from stainless steel in all Corrosion Zones.

Readers are advised to check the validity of this Appraisal by referring to the Valid Appraisals listing on the BRANZ website, or by contacting BRANZ.

10.7 Microclimatic conditions, including geothermal hot spots, industrial contamination and corrosive atmospheres, and contamination from agricultural chemicals or fertilisers can convert a mildly corrosive atmosphere into an aggressive environment for fasteners. The fixing of Shadowclad® sheets in areas subject to microclimatic conditions requires specific design in accordance with NZS 3604, Paragraph 4.2.4, and is outside the scope of this Appraisal.

Maintenance

11.1 Regular maintenance is essential to ensure the performance requirements of the NZBC are continually met and to ensure the maximum serviceability of the system.

11.2 Regular cleaning (at least annually) of the paint coating is required to remove grime, dirt and organic growth and to maximise the life and appearance of the coating. Grime may be removed by brushing with a soft brush, warm water and detergent. Paint systems must be recoated at approximately 7 – 10 yearly intervals in accordance with the paint manufacturer's instructions. Penetrating and non-penetrating stains must be recoated every 2 – 3 years in accordance with the stain manufacturer's instructions.

11.3 Annual inspections must be made to ensure that all aspects of the cladding system, including the selected finishing system, flashings and any sealed joints remain in a weatherproof condition. Any damaged areas or areas showing signs of deterioration which would allow water ingress must be repaired immediately. Sealant and paint coatings must be repaired in accordance with the relevant manufacturer's instructions.

11.4 Minimum ground clearances as set out in this Appraisal and the Technical Literature must be maintained at all times during the life of the system. *(Failure to adhere to the minimum ground clearances given in this Appraisal and the Technical Literature will adversely affect the long term durability of Shadowclad® Ventilated Cavity installations.)*

Control of External Fire Spread

12.1 Shadowclad® Ventilated Cavity has not been assessed for a peak heat release or total heat released rating. Refer to NZBC Acceptable Solutions and Verification Methods C/AS1, C/AS2 and C/VM2 for requirements for fire rating and exterior surface finish requirements of external walls..

Prevention of Fire Occurring

13.1 Separation or protection must be provided to Shadowclad® Ventilated Cavity from heat sources such as fire places, heating appliances, flues and chimneys. Part 7 of NZBC Acceptable Solutions C/AS1, C/AS2 and NZBC Verification Method C/VM1 provide methods for separation and protection of combustible materials from heat sources.

External Moisture

14.1 Shadowclad® Ventilated Cavity, when installed in accordance with this Appraisal and the Technical Literature will prevent the penetration of moisture that could cause undue dampness or damage to building elements.

14.2 The cavity must be sealed off from the roof and sub-floor space to meet code compliance with NZBC Clause E2.3.5.

14.3 Shadowclad® Ventilated Cavity allows excess moisture present at the completion of construction to be dissipated without permanent damage to building elements to meet code compliance with NZBC Clause E2.3.6.

14.4 The details given in the Technical Literature for weather sealing are based on the principle of having a first and second line of defence against moisture entry for all joints, penetrations and junctions. The ingress of moisture must be excluded by detailing joinery and wall interfaces as shown in the Technical Literature. Weathertightness details that are developed by the designer are outside the scope of this Appraisal and are the responsibility of the designer for compliance with the NZBC.

14.5 Shadowclad® Ventilated Cavity, where there is a designed cavity drainage path for moisture that penetrates the cladding, does not reduce the requirements for junctions, penetrations, etc to remain weather resistant.

Readers are advised to check the validity of this Appraisal by referring to the Valid Appraisals listing on the BRANZ website, or by contacting BRANZ.

Internal Moisture

15.1 Buildings must be constructed with an adequate combination of thermal resistance and ventilation, and space temperature must be provided to all habitable spaces, bathrooms, laundries and other spaces where moisture may be generated or may accumulate.

Water Vapour

15.2 Shadowclad® Ventilated Cavity is not a barrier to the passage of water vapour, and when installed in accordance with this Appraisal will not create a risk of moisture damage resulting from condensation.

Installation Information

Installation Skill Level Requirements

16.1 Installation must always be carried out in accordance with the Shadowclad® Ventilated Cavity Technical Literature and this Appraisal by, or under the supervision of, a Licensed Building Practitioner (LBP) with the relevant Licence Class.

Shadowclad® Ventilated Cavity Installation

Wall Underlay and Flexible Sill and Jamb Tape Installation

17.1 The selected wall underlay and flexible sill and jamb tape system must be installed by the building contractor in accordance with the underlay and tape manufacturers' instructions prior to the installation of the cavity battens and the rest of the Shadowclad® Ventilated Cavity system. Flexible wall underlay must be installed horizontally and be continuous around corners. Underlay must be lapped 75 mm minimum at horizontal joints and 150 mm minimum over studs at vertical joints. Generic rigid underlay materials must be installed in accordance with NZBC Acceptable Solution E2/AS1 and be overlaid with a flexible wall underlay. Proprietary systems shall be installed in accordance with the manufacturer's instructions. Particular attention must be paid to the installation of the wall underlay and sill and jamb tapes around window and door openings to ensure a continuous seal is achieved and all exposed wall framing in the opening is protected.

Cavity Batten Installation

17.2 The cavity battens must be installed over the wall underlay to the wall framing at maximum 300 mm horizontal centres where the studs are at 600 mm centres or at 400 mm centres when studs are at 400 mm centres.

17.3 Cavity battens are fixed in place with 40 x 2.5 mm hot-dip galvanised or stainless steel ring shank flat head nails at 300 mm centres when over studs or plates, and to the top and bottom plates and dwangs when between studs.

Shadowclad® Sheet Installation

17.4 Shadowclad® sheets may be cut on site by power or hand saw. Holes and cut-outs may be formed by using a hole saw.

17.5 Shadowclad® is envelope preservative treated. Where sheets are cut, all cuts must be coated with a brush on timber preservative specified in the Technical Literature for Shadowclad® Ventilated Cavity. Failure to correctly apply preservative to these areas may negatively affect the durability of the cut sheets.

17.6 Shadowclad® sheets must be dry prior to installation. Before the sheets are installed, cut edges must be sealed with a brush-on timber preservative. The bottom edges and back of the Shadowclad® sheets to a height of 150 mm must be primed or stain coated at ground level and where the sheets are installed above apron flashings on roofs.

17.7 Shadowclad® sheets must be installed starting at the bottom of the wall. The bottom of the Shadowclad® sheets must overhang the bottom plate by a minimum of 50 mm.

17.8 Before the Shadowclad® sheets are installed, the corner detail must be prepared to suit the selected option, e.g. external box angle or boxed corner. The necessary flashings must be installed before commencing sheet fixing.

Readers are advised to check the validity of this Appraisal by referring to the Valid Appraisals listing on the BRANZ website, or by contacting BRANZ.

17.9 The Shadowclad® sheets are fixed with 60 x 2.8 mm hot dip galvanised or ring shanked stainless steel flat head nails, or 8 gauge x 65 mm mechanically zinc plated or stainless steel wood screws at 150 mm centres around the edge of the sheets starting at the corners and at 300 mm centres in the body of the sheet. The fasteners must be no closer than 7 mm to the sheet edges, and on the rebated edge the fasteners must be inside the weather groove.

Aluminium Joinery Installation

17.10 Aluminium joinery and associated head flashings must be installed by the building contractor in accordance with the Technical Literature. A 7.5 – 10 mm nominal gap must be left between the joinery reveal and the wall framing so a PEF rod and air seal can be installed after the joinery has been secured in place.

Finishing

17.11 The coating manufacturer's instructions must be followed at all times for application of the paint or stain finish. Shadowclad® Sheets must be painted or stained as soon as practicable following fixing and must be clean and dry before commencing. If Shadowclad® sheets are exposed to the weather for more than 3 months, the surfaces must be washed with a mild detergent solution to remove any dirt, dust, mould or sea spray prior to coating. Allow the recommended drying time between coats and follow the temperature limitations for application. Carter Holt Harvey Plywood Limited does not recommend Shadowclad® be left uncoated when used as an exterior cladding.

17.12 The use of dark colours with an LRV of less than 50 and failure to adequately maintain the coating increases the risk of aesthetic related issues such as face checking. For this reason Carter Holt Harvey Plywood Limited does not support the use of dark colours on Shadowclad® exterior cladding.

17.13 Coatings should be applied by brush to ensure adequate coating film build is achieved. Application via roller or spray is not recommended.

Inspection

17.14 The Technical Literature must be referred to during the inspection of Shadowclad® Ventilated Cavity installations.

Health and Safety

18.1 Cutting of Shadowclad® sheets must be carried out in well ventilated areas and eye and hearing protection must be worn.

18.2 Safe use and handling procedures for the components that make up Shadowclad® Ventilated Cavity are provided in the relevant manufacturer's Technical Literature.

Basis of Appraisal

The following is a summary of the technical investigations carried out:

Tests

19.1 The following testing has been completed by BRANZ:

- BRANZ expert opinion on NZBC E2 code compliance for Shadowclad® Ventilated Cavity was based on testing and evaluation of all details within the scope and as stated within this Appraisal. Shadowclad® Ventilated Cavity details were tested to E2/VM1. The testing assessed the performance of the foundation detail, window head, jamb and sill details, vertical and horizontal Shadowclad® joints, internal and external corners. In addition to the weathertightness test, the details contained within the Technical Literature have been reviewed, and an opinion has been given by BRANZ technical experts that the system will meet the performance levels of Acceptable Solution E2/AS1 for cavity-based plywood claddings.
- Wind face load and fastener slip testing for Shadowclad® Ventilated Cavity. BRANZ determined design wind suction pressures, and by comparing these pressures with the NZS 3604 design wind speeds and AS/NZS 1170 pressure coefficients, the fixing requirements given in the Technical Literature were confirmed as suitable for timber framed walls.

Readers are advised to check the validity of this Appraisal by referring to the Valid Appraisals listing on the BRANZ website, or by contacting BRANZ.

Other Investigations

20.1 Structural and durability opinions have been provided by BRANZ technical experts.

20.2 The performance and testing of plywood wall cladding products in New Zealand and Australia has been considered, including the structural and weathertightness performance, durability and non-hazardous nature.

20.3 Site inspections have been carried out by BRANZ to examine the practicability of installation.

20.4 The Technical Literature for Shadowclad® Ventilated Cavity has been examined by BRANZ and found to be satisfactory.

Quality

21.1 The manufacture of Shadowclad® has been examined by BRANZ, including methods adopted for quality control. Details regarding the quality and composition of the materials used were obtained by BRANZ and found to be satisfactory.

21.2 The quality of materials, components and accessories supplied by Carter Holt Harvey Plywood Limited is the responsibility of Carter Holt Harvey Plywood Limited. The quality control system for the manufacture of Shadowclad® has been assessed and registered as meeting the requirements of AS/NZS 2269 by the Engineered Wood Products Association of Australasia, and ISO 9001 by Telarc SAI.

21.3 The treatment of Shadowclad® to H3.1 and 3.2 has been independently assessed and certified as meeting the requirements of AS/NZS 1604.3.

21.4 Quality of installation on site of components and accessories supplied by Carter Holt Harvey Plywood Limited and the building contractor is the responsibility of the installer.

21.5 Designers are responsible for the building design, and building contractors are responsible for the quality of installation of framing solutions and joinery, wall underlays, flashing tapes, cavity battens, airseals and Shadowclad® sheets in accordance with the instructions of Carter Holt Harvey Plywood Limited.

21.6 Building owners are responsible for the maintenance of Shadowclad® Ventilated Cavity in accordance with the instructions of Carter Holt Harvey Plywood Limited.

Sources of Information

- AS 3730: 2006 Guide to the properties of paints for buildings.
- AS/NZS 1170: 2002 Structural design actions.
- AS/NZS 1604.3: 2012 Specification for preservative treatment - Part 3: Plywood.
- AS/NZS 2269: 2012 Plywood - Structural.
- AS/NZS 4680: 2006 Hot-dip galvanized (zinc) coatings on fabricated ferrous articles.
- NZS 3602: 2003 Timber and wood-based products for use in building.
- NZS 3603: 1993 Timber Structures Standard.
- NZS 3604: 2011 Timber-framed buildings.
- NZS 4211: 2008 Specification for performance of windows.
- Acceptable Solutions and Verification Methods for New Zealand Building Code External Moisture Clause E2, Ministry of Business, Innovation and Employment, Third Edition July 2005 (Amendment 7, 01 January 2017).
- Ministry of Business, Innovation and Employment Record of amendments - Acceptable Solutions, Verification Methods and handbooks.
- The Building Regulations 1992.

Readers are advised to check the validity of this Appraisal by referring to the Valid Appraisals listing on the BRANZ website, or by contacting BRANZ.

Amendments

Amendment No.1, dated 5 September 2018.

This Appraisal has been amended to include the timber preservative treatment.

Amendment No. 2, dated 1 March 2021

This Appraisal has been amended to clarify coating requirements.

Readers are advised to check the validity of this Appraisal by referring to the Valid Appraisals listing on the BRANZ website, or by contacting BRANZ.

BRANZ

In the opinion of BRANZ, the Shadowclad® Ventilated Cavity Cladding System is fit for purpose and will comply with the Building Code to the extent specified in this Appraisal provided it is used, designed, installed and maintained as set out in this Appraisal.

The Appraisal is issued only to Carter Holt Harvey Plywood Limited, and is valid until further notice, subject to the Conditions of Appraisal.

Conditions of Appraisal

1. This Appraisal:
   a) relates only to the product as described herein;
   b) must be read, considered and used in full together with the Technical Literature;
   c) does not address any Legislation, Regulations, Codes or Standards, not specifically named herein;
   d) is copyright of BRANZ.
2. Carter Holt Harvey Plywood Limited:
   a) continues to have the product reviewed by BRANZ;
   b) shall notify BRANZ of any changes in product specification or quality assurance measures prior to the product being marketed;
   c) abides by the BRANZ Appraisals Services Terms and Conditions;
   d) warrants that the product and the manufacturing process for the product are maintained at or above the standards, levels and quality assessed and found satisfactory by BRANZ pursuant to BRANZ's Appraisal of the product.
3. BRANZ makes no representation or warranty as to:
   a) the nature of individual examples of, batches of, or individual installations of the product, including methods and workmanship;
   b) the presence or absence of any patent or similar rights subsisting in the product or any other product;
   c) any guarantee or warranty offered by Carter Holt Harvey Plywood Limited.
4. Any reference in this Appraisal to any other publication shall be read as a reference to the version of the publication specified in this Appraisal.
5. BRANZ provides no certification, guarantee, indemnity or warranty, to Carter Holt Harvey Plywood Limited or any third party.

For BRANZ

Chelydra Percy
Chief Executive

Date of Issue:
21 September 2017

Readers are advised to check the validity of this Appraisal by referring to the Valid Appraisals listing on the BRANZ website, or by contacting BRANZ.

Gina Utting & Dawn Owens

Re: 752 Settlement Road, Hakaru, Auckland

11.8.21

Regarding Proposed Garage/Sleepout
760 Settlement Road, Hakaru, Auckland.

To Whom It May Concern.

Russell Swain, as my agent and designer, has my permission to act on my behalf regarding lodging the building consent application, responding to any council RFI's during processing and any minor variations during construction.

Kind Regards



Gina Utting – Trustee

Dawn Owens - Trustee

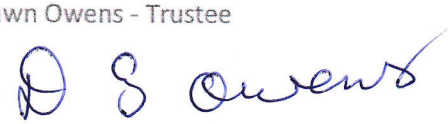

Email: ginautting@gmail.com

WILEY GEOTECHNICAL

23 June 2021

Gina Utting
ginautting@gmail.com

RE: Geotechnical Investigation for Proposed Residence at Lot 3, 760 Settlement Road, Hakaru.

Wiley Geotechnical Limited (WGL) was requested by Gina Utting to provide a geotechnical investigation and guidance on foundation design for a proposed relocation of a 4-bedroom dwelling and the construction of a new shed. We have received and reviewed a site plan produced by BCW Design Ltd (Ref 21036, dated April 2021). We understand the house is proposed to be constructed upon a timber pile foundation, and the shed is to be constructed upon a concrete foundation.

We have previously undertaken a geotechnical investigation on the property as part of the subdivision process (Our Reference #20034, dated May 2020). In our earlier investigation a single borehole was untaken on the site near the proposed house location, this earlier borehole has been included in this report.

WGL visited the site on the 9th of June 2021 and made the following observations:

- The site is located on a relatively flat section and is currently grassed
- The site is situated upon a gentle south west slope angled at 2 degrees with the northern treed area sloping to the north between 3 to 5 degrees.
- BH1 was conducted on the house building site, while BH2 was conducted on the shed site.
- The shed is located 3.0 m from back boundary, a 2.0 m high rock wall.
- The building platform for the dwelling has not been formed.
- No obvious signs of instability were noted.
- Two hand augers and six Scala Penetrometer (Scala) test were undertaken within potentially suitable building sites to a maximum depth of 2.1 m below ground level.

Geology

The GNS map for the site indicates that it is underlain by alluvium of the Tauranga Group comprising “Partly consolidated mud, sand, gravel and peat or lignite of alluvial, colluvial, lacustrine, swamp and estuarine origins”.

Seismic Hazards

Since there are no known active faults crossing the property, it is our opinion that ground rupture is unlikely at the subject property. Granular soils, such as sand, are susceptible to liquefaction in the event of future earthquakes. This may result in settlement or lateral deformation. Based on the regional earthquake risk (discussed further below) and depth to groundwater, it is our opinion that there is a

relatively low risk of liquefaction induced settlement or lateral movement such that specific liquefaction design is not required.

We recommend that the future structures and improvements are designed to account for seismic shaking and ground motions. For seismic design at the site and in line with NZS 1170.5:2004 the corresponding design peak ground accelerations (PGA) for the site have been calculated from NZS 1170.5:2004 using the recommendations of the New Zealand Geotechnical Society as follows:

a_h = Z R C

In which:

Z = base PGA called “Hazard factor” and is given by Table 3.3 and Figures 3.3 and 3.4 of NZS 1170.5:2004. Z = 0.13 for areas north of Auckland.

R = “Return period factor” and is given by Table 3.5 of NZS 1170.5:2004 (R = 1.0 for 500 year return period and R = 0.25 for a 25 year return period)

C = Site response factor called “Spectral shape factor” in NZS 1170.5:2004 and is based on the seismic site classification. We consider this site to be **Class C**, based on soil depth and therefore C = 1.33.

The design PGA at the site is given as:

ULS: a_h = 0.13 x 1.00 x 1.33 = 0.17 (i.e. PGA = 0.17 g)

SLS: a_h = 0.13 x 0.25 x 1.33 = 0.04 (i.e. PGA = 0.04 g)

Field Exploration and Subsurface Conditions

WGL carried out a shallow subsurface investigation consisting of two hand augers with shear vane testing and six Scala Penetrometer (Scala) tests within the approximate areas shown on the site plan below.



Figure 1: Approximate Subsurface Exploration Locations

The hand augers were carried out to depths of 2.1 m. The subsurface material encountered in our hand auger investigation generally consisted of a fill/topsoil underlain by a fill/silt with occasional topsoil inclusions. A buried topsoil layer was encountered for 50 mm at 0.45 m at BH1. A natural silt is then encountered from 0.5 m, with clay and plasticity increasing with depth and occasional orange brown and limonitic staining. The measured undrained shear strengths generally all exceeded 100 kPa. The results of the individual Scala tests are shown below. Our previous hand auger (HA1 in blue) encountered very stiff natural soils with measured undrained shear strengths greater than 200 kPa

Groundwater was not encountered during our testing. The groundwater level may vary from the depth measured at the time of exploration, as a result of seasonal change, recent precipitation and/or irrigation practices.

Based on this, it is our opinion that the material encountered in our subsurface investigation is broadly consistent with published geologic mapping. The bore logs are presented as an appendix to this report and are written in general accordance with the New Zealand Geotechnical Society field classification guidelines (NZGS, 2005).

Scala Results

Scala blows/100mm at Lot 3, 760 Settlement Road, Hakaru						
(m)	Scala 1 (SP1)	Scala 2 (SP2)	Scala 3 (SP3)	Scala 4 (SP4)	Scala 5 (SP5)	Scala 6 (SP6)
0.1	1	1	1	1	1	1
0.2	3	2	2	1	1	3
0.3	2	2	2	3	1	2
0.4	2	3	3	3	2	2
0.5	3	3	4	2	2	3
0.6	1	3	3	2	4	2
0.7	3	4	3	3	5	3
0.8	3	3	2	4	5	4
0.9	4	4	2	4	5	4

Expansive Soils

Expansive clay and silt soils are common in the wider Northland region and have the tendency to shrink and swell, particularly with seasonal fluctuations of soil water content. This behavior has implications for foundation design and surface structures and should be incorporated during foundation design.

Based on our visual and field assessment of the soils encountered onsite, and our experience in the area, we consider that the Expansive Site Class for this site is “M - moderate” - in accordance with AS 2870. Accordingly, the minimum footing depth is 600 mm below cleared ground level.

Conclusions and Recommendations

It is our opinion that the proposed development is feasible from a geotechnical point of view, provided the recommendations presented in this report and standard development practices are incorporated in the design and construction of the project.

The soil underlying the site does **not** reach “good ground” in the upper metre as defined in NZS 3604 (2011) based on the Scala results as the requirement is 5 blows per 100 mm with a Scala Penetrometer; however, the shear vane readings indicate a suitable bearing capacity is available for the proposed house, with readings generally greater than 100 kPa.

Pile Foundation (Relocatable Dwelling)

It is our opinion that wooden piles designed in accordance with NZS3604 (2011) will provide a suitable foundation for the proposed dwelling. We recommend all piles are H5 treated and have a minimum 125 x 125 mm dimensions. We recommend that anchor piles are embedded to a minimum depth of 0.9 m, and all other piles are embedded to a minimum depth of 0.6 m. Pile holes should be bored with a minimum diameter of 400 mm.

If a second-hand dwelling is being utilised, we recommend piles are located along the existing bearers in the same positions as previously located to transfer existing loads and provide supports for internal loads previously supported. If an alternative pile plan is proposed it will shall to be approved by a professional Structural Engineer familiar with this report.

The piles should meet NZS3640 Class H5, and cut surfaces should be retreated with a protective coating in accordance with the manufacturer's recommendations. The pole length should be sufficient to extend to the design foundation level, and provide the stick-up length necessary for the super-structure and planned floor levels. Piles should not be spliced.

All bored holes should be inspected by WGL, or a qualified geotechnical engineer, prior to continuing with foundation construction

A geotechnical ultimate bearing capacity of 450 kPa should be available.

Concrete Foundation (Shed)

We recommend that a minimum 300 mm layer of compacted hard fill is placed prior to applying blinding sand for any reinforced concrete slab and foundation elements have a minimum embedment depth of 0.6 m. We recommend a minimum 100 mm layer of compacted hard fill is placed for a waffle slab (i.e Rib-Raft) with the foundation being designed for expansive site class 'M – Moderate', as per AS 2870. All topsoil and fill material must be removed before foundation construction commences.

We recommend the following regarding hard fill and its placement:

- Underslab hard fill comprising GAP40/GAP65, or an equivalent approved product, should be placed across the building platform in 100 mm lifts and compacted using appropriate compaction plant (e.g. a hand held or excavator mounted vibrating compaction plate), and brought up to the finished design levels. We would recommend a high quality gravel without too many fines.
- For fills greater than 0.6 m. Every third layer of hard fill lift should be observed and tested by WGL to confirm that it has been placed to an appropriate specification. At this stage it is anticipated that compaction should be to achieve 95% of the maximum dry density (MDD) of the material, to be confirmed onsite using either a NDM (nuclear densometer) or Impact Hammer testing (Target 15 CBR).

A geotechnical ultimate bearing capacity of 300 kPa may be used in the design of a reinforced concrete slab or a waffle slab (i.e. Rib Raft). The ultimate bearing capacity should be available provided that the hard fill has been placed and certified according to the construction specification. We recommend WGL, or a qualified geotechnical engineer, inspect any excavations prior to the placing of any fill or foundation elements.

LIMITATIONS

(i) This report has been prepared for the use of our client, Gina Utting and their professional advisers and the relevant Regional Authorities in relation to the specified project brief described

in this report. No liability is accepted for the use of any part of the report for any other purpose or by any other person or entity.

(ii) Assessments made in this report are based on the ground conditions indicated from published sources, site inspections and subsurface investigations described in this report based on accepted normal methods of site investigations. Variations in ground conditions may exist between test locations and therefore have not been taken into account in the report. If variations are found during excavation or at foundation preparation stage WGL should be notified immediately so we can amend our recommendations.

(iii) This Limitation should be read in conjunction with the IPENZ/ACENZ Standard Terms of Engagement.

We trust that this information meets your current requirements. Please do not hesitate to contact the undersigned on 021 0399 385 or matt@wileygeotechnical.co.nz if you require any further information.



Matt Wiley, CPEng

Principal Engineer

Attachments:

- Bore Logs

WILEY GEOTECHNICAL LTD

BOREHOLE No. BH1

SITE: Lot 3, 760 Settlement Road, Hakaru

REF: 21150

Sheet 1 of 1

REDUCED LEVEL (RL) / INFERRED GEOLOGY	DESCRIPTION OF SOIL	SOIL SYMBOL	DEPTH (m)	SAMPLE TYPE	WATER CONTENT (%)	WATER LEVEL	CORRECTED VANE SHEAR STRENGTH (kPa) ●Peak Field Vane ○Remoulded Field vane 50 100 150	SCALA PENETROMETER BLOWS / 100 mm 5 10 15
FILL	FILL/TOPSOIL							
	FILL/SILT slightly clayey, slight plasticity, light brown, rare topsoil inclusions						200	
	TOPSOIL buried							
Alluvium of the Tauranga Group	SILT slightly clayey, slight plasticity, light brown						87 ○ 147 ●	
	at 0.8 m increase in clay and plasticity		1				102 ○ 192 ●	
							200	
	at 1.5 m light grey with orange brown staining						200	
							200	
			2				200	
	E.O.B: 2.1 m (target depth)							
			3					
			4					
			5					

NOTES Groundwater was not encountered.
House site

LOGGED BY: CS & NH
DATE DRILLED: 09-Jun-21
DRILL METHOD 50 mm Hand Auger

WILEY GEOTECHNICAL LTD

BOREHOLE No. BH2

SITE: Lot 3, 760 Settlement Road, Hakaru

REF: 21150

Sheet 1 of 1

REDUCED LEVEL (RL) / INFERRED GEOLOGY	DESCRIPTION OF SOIL	SOIL SYMBOL	DEPTH (m)	SAMPLE TYPE	WATER CONTENT (%)	WATER LEVEL	CORRECTED VANE SHEAR STRENGTH (kPa) ●Peak Field Vane ○Remoulded Field vane 50 100 150	SCALA PENETROMETER BLOWS / 100 mm 5 10 15
TS	TOPSOIL dark brown, possible fill							
Alluvium of the Tauranga Group	SILT slightly clayey, slight plasticity, brown at 0.6 m increase in clay and plasticity at 1.2 m light grey with orange brown staining occasional limonitic staining, dark brown/orange brown		1 2				200 200 200 200 200 200	
	E.O.B: 2.1 m (target depth)		3 4 5					

NOTES Groundwater was not encountered.
TS = Topsoil
Shed site

LOGGED BY: CS & NH
DATE DRILLED: 09-Jun-21
DRILL METHOD 50 mm Hand Auger

WILEY GEOTECHNICAL LTD

BOREHOLE No. 1

SITE: Settlement Road, Mangawhai

REF: 20034

Sheet 1 of 1

REDUCED LEVEL (RL) / INFERRED GEOLOGY	DESCRIPTION OF SOIL	SOIL SYMBOL	DEPTH (m)	SAMPLE TYPE	WATER CONTENT (%	WATER LEVEL	CORRECTED VANE SHEAR STRENGTH (kPa) ● Peak Field Vane ○ Remoulded Field vane 50 100 150	SCALA PENETROMETER BLOWS / 100 mm 5 10 15
	TOPSOIL very fine silt, dark brown							
Undifferentiated Melange of the Northland Allochthon	SILT slightly clayey, friable, light brown with orange/brown staining, desiccation cracking, dry powdery slightly to moderately clayey		1 2				200 200 200 200 200 200 200	
	E.O.B: 2.1 m		3 4 5					

NOTES Groundwater was not encountered.

LOGGED BY: MW & JR

DATE DRILLED: 19-Mar-20

DRILL METHOD 50 mm Hand Auger

CORRUGATE



CORRUGATE

CORRUGATE

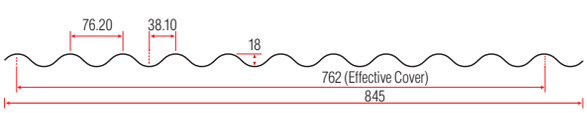

WIDE CORRUGATE

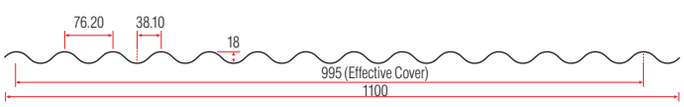

All measurements are in millimetres



Description

Corrugate remains an ageless icon, and as a cost competitive and trend setting roofing and cladding material continues to gain in popularity. Corrugate offers a stylish alternative to today's building designers and home owners alike, allowing creative flair and individuality during the design process.

Product flexibility coupled with a small amount of imagination will ensure a distinct point of difference to other homes and buildings in the vicinity.

Corrugate is available in both standard and wide cover widths. (Wide cover widths subject to minimum quantity).

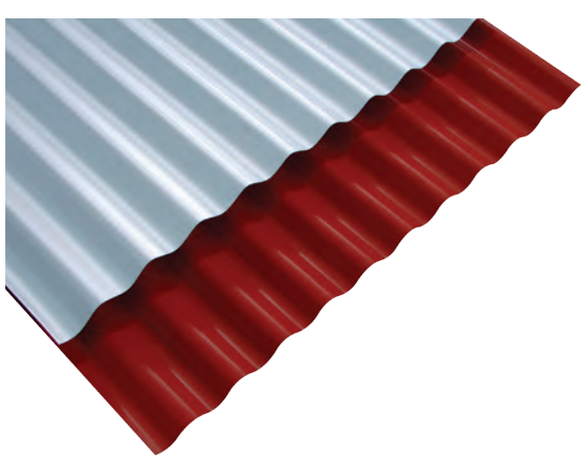

CORRUGATE

Applications

- Residential roofing & cladding
- Rural and lifestyle roofing & cladding
- Commercial roofing & cladding
- Drape/spring curving
- Bull nose
- Horizontal cladding
- Ceilings and linings
- Acoustic ceiling linings
- Fencing

Roof Pitch

In accordance with E2/AS1 of the NZ Building Code, the minimum pitch for Corrugate is 8°. For end lapped sheets or a roof length greater than 18m, contact Roofing Industries for specific advice.

Materials

- Zincalume® Steel: 0.40mm or 0.55mm BMT, AZ150 (150gm/m²) G550 Mpa Yield Stress
- Galvanised Steel: 0.40mm or 0.55mm BMT, Z450 (450gm/m²) G550 Mpa Yield Stress
- Pre-painted COLORCOTE® or COLORSTEEL over Zincalume® 0.40mm or 0.55mm BMT, AZ150 (150gm/m²), G550 Mpa Yield Stress
- Prepainted COLORCOTE® or COLORSTEEL over Galvanised Steel: 0.40mm or 0.55mm BMT ZM275 (275gm/m²) G550 Mpa Yield Stress
- 0.55mm BMT may be supplied as G300 Mpa Yield Stress

For information on Aluminium, Stainless Steel and Copper Corrugate, contact Roofing Industries.

SPECIFICATIONS

Sheet width: 845mm & 1100mm	Sheet coverage: 762mm & 995mm
Sheet length: Any length (Subject to transportation)	Minimum Pitch: 8°

SPAN TABLES (Steel Substrate Material)

Type of Span	Maximum Span (Metres)			Maximum Span (Metres)		
	0.40mm BMT			0.55mm BMT		
	Wind Zone			Wind Zone		
	Low & Medium	High	Very High	Low & Medium	High	Very High
Intermediate	1.200	1.100	0.900	1.600	1.450	1.200
End	0.700	0.700	0.650	0.950	0.950	0.900

Durability

Selection of the correct grade of material and appropriate surface coating is imperative to ensure Corrugate will perform satisfactorily in the environment it is to be installed, and meets the requirements of The NZ Building Code. Environmental Categories and Surface Coating literature is available on request.

Accessories

A full range of matching accessories is available, including Ridging, Ridgecaps, Flashings, Underlays, Insulation, Fasteners, Rotary Roof Ventilators and Rainwater systems.

Translucent and Transparent roofing

Corrugate is also available as glass reinforced, polycarbonate and PVC roofing and cladding.

Fixings and Fasteners

Fixings and fasteners are to be of an approved type, compatible with all materials, the environment and meeting the requirements of the NZ Building Code. Installation is to be in accordance with E2/AS1 and the NZ Metal Roof and Wall Cladding Code of Practice. Further information is available via the www.roof.co.nz website.

Roof Application

Timber Purlins 12 x 50 Timbertite® class 4 screws with neos or 60mm Weatherseal® nails*

Steel Purlins 12 x 45 Steeltite® class 4 screws with neos*

- Fix side laps and every second crest to: Ridge, Hip, Valley, Gutter and Periphery areas
- For the remainder of the roof: Fix Side laps, Miss 2, Hit 1, miss 2 etc

* For sheet lengths 8-18 metres the lower 50% of the roof should be fixed using oversize holes at fastening points and a 30mm EPDM and matching metal profile washer. For sheets in excess of 18 metres refer to our website www.roof.co.nz.

Walling Application

Fix in the pan adjacent to every side-lap over rib and every second pan using Class 4 Timbertites® or Steeltites® and neos as appropriate, ensuring that when the fastener is into timber it is of sufficient length to penetrate the framing by 25mm.

Note: the above recommendations are suitable for steel based materials, for other materials refer to our website www.roof.co.nz.

Curving

Steel substrate Corrugate can be spring curved to the following radius.

0.40mm BMT–12 metres

0.55mm BMT–10 metres

Corrugate can be bullnosed or curved to a minimum radius of 300mm.

Ordering

Roofing Industries staff can provide technical assistance to ensure accurate ordering of roofing and accessories thereby avoiding costly errors. Corrugate is manufactured and delivered cut to length.

Handling and storage

- On delivery, visually inspect sheets for damage.
- Store Corrugate and accessories on evenly spaced and supportive dunnage, clear of the ground and under cover. If packs become wet and the product not used immediately, separate the sheets to allow air circulation and drying.
- Do not drag sheets across each other.
- If protected with strippable plastic film, keep under cover and remove as the product is being installed.

Installation

Prior to commencing your project, please refer to Roofing Industries Handling Storage and Installation Guide, E2/AS1 and the NZ Metal Roof and Wall Cladding Code of Practice. Failure to install the product to industry requirements will void the warranty.

Maintenance

Regular maintenance will extend the life of the roof and accessories. It is strongly advised that areas not receiving regular rain washing should be washed with freshwater on a regular basis. On purchasing your roof it is imperative to request a copy of the maintenance guide(s) and familiarise yourself with industry requirements. Failure to do so can void the warranty.

Warranties

Warranties meet the statutory requirements of the NZ Building Code, are available on request and reflect our New Zealand owned and operated company, test facilities and local climatic conditions. Sample warranties are available at website www.roof.co.nz.

Your distributor

AUCKLAND (Head office)
Roofing Industries Ltd
5 John Glenn Avenue,
North Harbour
PO Box 302-385
North Harbour 0751
Ph: (09) 414 4585
Fax: (09) 414 4586
office@roof.co.nz

WHANGAREI
Roofing Industries (Northland) Ltd
38 Winger Crescent, Kamo,
Whangarei
PO Box 883
Whangarei 0112
Ph: (09) 437 2040
Fax: (09) 437 5010
northland@roof.co.nz

WAIKATO
Roofing Industries (Waikato) Ltd
Unit 4/550 Te Rapa Rd
Te Rapa, Hamilton
PO Box 20281 Te Rapa,
Hamilton 3241
Ph: (07) 849 5115
Fax: (07) 849 2115
waikato@roof.co.nz

TAUPO
Roofing Industries (Taupo) Ltd
1158 Rakaunui Rd
Taupo
PO Box 408
Taupo 3351
Ph: (07) 376 7971
Fax: (07) 376 7972
taupo@roof.co.nz

PALMERSTON NORTH
Roofing Industries (Central) Ltd
653 Tremaine Ave
Palmerston North
PO Box 4584
Palmerston North 4410
Ph: (06) 353 8480
Fax: (06) 353 8470
central@roof.co.nz

SOUTH ISLAND
Roofing Industries Ltd
220a Annex Road
PO Box 6248
Upper Riccarton
Christchurch 8442
Ph: (03) 339 2324
Fax: (03) 339 2325
south@roof.co.nz

Roofing Industries roof.co.nz

It should be noted that this technical data sheet is based around the requirements of E2/AS1 of the NZBC. For buildings or uses that are outside the scope of, or NOT required to comply with E2/AS1 alternative technical data may apply. Please contact Roofing Industries Ltd.

BRANZ Appraised
Appraisal No. 695 [2017]

WATERGATE PLUS WALL UNDERLAY



Appraisal No. 695 (2017)

Amended 01 March 2021

This Appraisal replaces BRANZ Appraisal No. 695 (2010)

BRANZ Appraisals

Technical Assessments of products for building and construction.

Thermakraft Limited
PO Box 58 112
Greenmount
Auckland
Tel: 09 273 3727
Fax: 09 273 3726
Free phone: 0800 806 595
www.thermakraft.co.nz

BRANZ
1222 Moonshine Rd,
RD1, Porirua 5381
Private Bag 50 908
Porirua 5240,
New Zealand
Tel: 04 237 1170
branz.co.nz

Product

1.1 Watergate Plus is a fire retardant, flexible synthetic wall underlay for use under direct fixed and non-direct fixed wall cladding on timber and steel-framed buildings. The product is manufactured from coated, non-woven polyolefin and is coloured white.

Scope

Flexible Wall Underlay

2.1 Watergate Plus has been appraised for use as a flexible wall underlay for buildings within the following scope:

- the scope limitations of NZBC Acceptable Solution E2/AS1, Paragraph 1.1 for timber-framed buildings; or,
- the scope limitations of NASH Building Envelope Solutions, Paragraph 1.1 for steel-framed buildings; and,
- with direct fixed absorbent and non-absorbent wall claddings; or,
- with absorbent and non-absorbent wall claddings installed over an 18 mm minimum drained cavity; or,
- with masonry veneer in accordance with NZBC Acceptable Solution E2/AS1 for timber-framed buildings or to NASH Building Envelope Solutions for steel-framed buildings; and,
- situated in NZS 3604 Wind Zones up to, and including, Very High.

Use over Rigid Wall Underlay

2.2 Watergate Plus has been appraised for use as a flexible wall underlay over rigid wall underlays on buildings within the following scope:

- the scope limitations of NZBC Acceptable Solution E2/AS1, Paragraph 1.1 for timber-framed buildings; or,
- the scope limitations of NASH Building Envelope Solutions Paragraph 1.1 for steel-framed buildings; and,
- with absorbent and non-absorbent wall claddings installed over an 18 mm minimum drained cavity; and,
- with masonry veneer in accordance with NZBC Acceptable Solution E2/AS1 for timber-framed buildings or NASH Building Envelope Solutions for steel-framed buildings; and,
- situated in NZS 3604 and NASH Standard Part 2 Wind Zones up to, and including, Extra High.

Readers are advised to check the validity of this Appraisal by referring to the Valid Appraisals listing on the BRANZ website, or by contacting BRANZ.

Specific Design

2.3 Watergate Plus has also been appraised for use on buildings subject to specific weathertightness design. Building designers are responsible for the building design and for the incorporation of Watergate Plus into their design in accordance with the declared properties and the instructions of Thermakraft Limited.

Building Regulations

New Zealand Building Code (NZBC)

3.1 **In the opinion of BRANZ, Watergate Plus, if used, designed, installed and maintained in accordance with the statements and conditions of this Appraisal, will meet, or contribute to meeting the following provisions of the NZBC:**

Clause B2 DURABILITY: Performance B2.3.1 (a) not less than 50 years, B2.3.1 (b) 15 years and B2.3.2. Watergate Plus meets these requirements. See Paragraphs 9.1 and 9.2.

Clause C3 FIRE AFFECTING AREAS BEYOND THE FIRE SOURCE: Performance C3.4 (c). Watergate Plus meets this requirement. See Paragraph 10.1.

Clause E2 EXTERNAL MOISTURE: Performance E2.3.2. When used as part of the cladding system, Watergate Plus will contribute to meeting this requirement. See Paragraphs 12.1 and 12.2.

Clause F2 HAZARDOUS BUILDING MATERIALS: Performance F2.3.1. Watergate Plus meets this requirement.

Technical Specification

4.1 Watergate Plus is a white, 105 g/m^2 non-woven, microporous polyolefin fabric underlay.

4.2 The product is supplied in various sizes. Refer to Table 1. The product is printed with the Watergate Plus logo repeated along the length of the roll and can also be co-branded with custom printing. The rolls are wrapped in clear polythene film.

Table 1: Roll Dimensions

Width (mm)	Length (m)	Coverage (m^2)
1,370	18.5	25
1,370	37.0	50
1,370	73.0	100
2,740	18.5	50
2,740	36.5	100

Accessories

4.3 Accessories used with Watergate Plus which are supplied by the installer are:

- **Fixings** - 6-8 mm staples, large head clouts minimum 20 mm long, self-drilling screws, proprietary underlay fixings, double sided tape (for steel framing) or other temporary fixings to attach the wall underlay to the framing.
- **Wall underlay restraint (timber frame)** - polypropylene strap, 75 mm galvanised mesh or galvanised wire, or vertical cavity battens where required to restrain the wall underlay in accordance with NZBC Acceptable Solution E2/AS1, Paragraph 9.1.8.5.
- **Wall underlay restraint (steel frame)** - polypropylene strap, 75 mm galvanised mesh or galvanised wire, or vertical cavity battens where required to restrain the wall underlay in accordance with NASH Building Envelope Solutions, Paragraph 9.1.9.5. Thermal break sheathing installed in accordance with NASH Building Envelope Solutions Paragraph 11.4.3.2.

Readers are advised to check the validity of this Appraisal by referring to the Valid Appraisals listing on the BRANZ website, or by contacting BRANZ.

Handling and Storage

5.1 Handling and storage of the product, whether on-site or off-site, is under the control of the installer. The rolls must be protected from damage and weather. They must be stored on end, under cover, in clean, dry conditions and must not be crushed.

Technical Literature

6.1 Refer to the Appraisals listing on the BRANZ website for details of the current Technical Literature for Watergate Plus. The Technical Literature must be read in conjunction with this Appraisal. All aspects of design, use, installation and maintenance contained in the Technical Literature and within the scope of this Appraisal must be followed.

Design Information

7.1 Watergate Plus is intended for use as an alternative to conventional building papers which are fixed over timber or steel-framed walls in order to limit the entry of wind into building cavities, and to act as a secondary barrier to wind-driven rain. Refer to Table 2 for material properties.

7.2 The material also provides a degree of temporary weather protection during early construction. However, the product will not make the building weathertight and some wetting of the underlying structure is always possible before the building is closed in. Hence, the building must be closed-in and made weatherproof before moisture sensitive materials such as wall or ceiling linings and insulation materials are installed.

7.3 Watergate Plus must not be exposed to the weather or ultraviolet (UV) light for a total of more than 60 days before being covered by the wall cladding.

7.4 Watergate Plus is suitable for use as an air barrier where walls are not lined, such as attic spaces at gable ends, in accordance with NZBC Acceptable Solution E2/AS1 or NASH Building Envelope Solutions, Paragraph 9.1.4 (c).

7.5 In cavity installations where the cavity battens are installed at greater than 450 mm centres, the wall underlay must be restrained between the battens to prevent the underlay bulging into the cavity space when bulk insulation is installed in the wall frame cavity. Refer to NZBC Acceptable Solution E2/AS1, Paragraph 9.1.8.5 for timber framing or NASH Building Envelope Solutions, Paragraph 9.1.9.5 for steel framing. Wall underlay restraint options include polypropylene strap, 75 mm galvanised mesh or galvanised wire, or vertical cavity battens or thermal break sheathing (steel framing only).

Table 2: Material Properties

NZS 2295 Property	Property Performance Requirement	Actual Property Performance
Absorbency	≥ 100 g/m^2	Pass
Vapour Resistance	≤ 7 MN s/g	Pass
Water Resistance	≥ 20 mm	Pass
pH of Extract	≥ 6.0 and ≤ 9.0	Pass
Shrinkage	≤ 0.5%	Pass
Mechanical	Edge tear and tensile strength	**Edge tear (Average):** Machine direction = 77 N Cross direction = 56 N **Tensile strength (Average):** Machine direction = 2.5 kN/m Cross direction = 1.8 kN/m
Air Barrier	Air resistance: ≥ 0.1 MN s/m^3	Pass. Watergate Plus can be used as an air barrier.

Readers are advised to check the validity of this Appraisal by referring to the Valid Appraisals listing on the BRANZ website, or by contacting BRANZ.

Claddings

7.6 Watergate Plus is suitable for use under wall claddings as a wall underlay as called up in NZBC Acceptable Solution E2/AS1, Table 23 on timber-framed buildings and NASH Building Envelope Solutions Table 23 on steel-framed buildings, including non-absorbent wall claddings such as vinyl and metal-based weatherboards in direct fixed situations.

Stucco Plaster

7.7 Watergate Plus is suitable for use as a non-rigid backing material for stucco plaster in accordance with the requirements of NZBC Acceptable Solution E2/AS1, Paragraph 9.3.5.1 for timber framing or NASH Building Envelope Solutions Paragraph 9.3.5.1 for steel framing. The underlay must be supported with 75 mm galvanised mesh or plastic tape or wire at 150 mm centres run across the cavity battens to limit deflection to a maximum of 5 mm.

7.8 Watergate Plus may also be used as a slip layer over rigid backings for stucco plaster in accordance with the requirements of NZBC Acceptable Solution E2/AS1, Paragraph 9.3.3.1 b) for timber framing or NASH Building Envelope Solutions Paragraph 9.3.3.1 b) for steel framing.

Structure

8.1 Watergate Plus is suitable for use in all Wind Zones of NZS 3604 and NASH Standard Part 2 up to, and including, Very High when used as a stand-alone flexible wall underlay, and all Wind Zones of NZS 3604 up to, and including, Extra High when used as an overlay for rigid wall underlays.

Durability

9.1 Watergate Plus meets code compliance with NZBC Clause B2.3.1 (a) not less than 50 years for wall underlays used where the cladding durability requirement or expected serviceable life is not less than 50 years, e.g. behind masonry veneer, and code compliance with NZBC Clause B2.3.1 (b) 15 years for wall underlays used where the cladding durability requirement is 15 years.

Serviceable Life

9.2 Provided it is not exposed to the weather or UV light for a total of more than 60 days, and provided the exterior cladding is maintained in accordance with the cladding manufacturer's instructions and the cladding remains weather resistant, Watergate Plus is expected to have a serviceable life equal to that of the cladding.

Control of Internal Fire and Smoke Spread

10.1 Watergate Plus has an AS 1530 Part 2 flammability index of not greater than 5 and therefore meets the requirements of NZBC Acceptable Solution C/AS2, Paragraph 4.17.8 b), for the surface finish requirements of suspended flexible fabric used as an underlay to exterior cladding that is exposed to view in occupied spaces.

Prevention of Fire Occurring

11.1 Separation or protection must be provided to Watergate Plus from heat sources such as fireplaces, heating appliances, flues and chimneys. Part 7 of NZBC Acceptable Solutions C/AS1, C/AS2 and NZBC Verification Method C/VM1 provide methods for separation and protection of combustible materials from heat sources.

External Moisture

12.1 Watergate Plus must be used behind claddings that meet the requirements of the NZBC, such as those covered by NZBC Acceptable Solution E2/AS1 or NASH Building Envelope Solutions, or claddings covered by a valid BRANZ Appraisal.

12.2 Watergate Plus, when installed in accordance with the Technical Literature and this Appraisal will assist in the total cladding systems compliance with NZBC Clause E2.

Readers are advised to check the validity of this Appraisal by referring to the Valid Appraisals listing on the BRANZ website, or by contacting BRANZ.

Installation Information

Installation Skill Level Requirements

13.1 All design and building work must be carried out in accordance with the Watergate Plus Wall Underlay Technical Literature and this Appraisal by competent and experienced tradespersons conversant with wall underlays. Where the work involves Restricted Building Work (RBW) this must be completed by, or under the supervision of, a Licensed Building Practitioner (LBP) with the relevant Licence Class.

Underlay Installation

14.1 Watergate Plus must be fixed to all framing members at maximum 300 mm centres with clouts, staples, self drilling screws or proprietary underlay fixings. For steel framing double-sided tape may be used which is applied to each stud in continuous strips. The underlay must be pulled taut over the framing before fixing.

14.2 Watergate Plus must be run horizontally and must extend from the upper-side of the top plate to the under-side of the bearers or wall plates supporting ground floor joists, or below bottom plates on concrete slabs. Horizontal laps must be no less than 150 mm wide, with the direction of the lap ensuring that water is shed to the outer face of the membrane. End laps must be made over framing and be no less than 150 mm wide.

14.3 The wall underlay should be run over openings and these left covered until windows and doors are ready to be installed. Openings are formed in the underlay by cutting on a 45 degree diagonal from each corner of the penetration. The flaps of the cut underlay must be folded inside the opening and stapled to the penetration framing. Excess underlay may be cut off flush with the internal face of the wall frame.

14.4 Watergate Plus can be added as a second layer over head flashings in accordance with the requirements of NZBC Acceptable Solution E2/AS1, Paragraph 9.1.10.3 for timber framing or NASH Building Envelope Solutions Paragraph 9.1.11.3 for steel framing.

14.5 When fixing the product in windy conditions, care must be taken due to the large sail area created by wide roll widths.

14.6 Any damaged areas of Watergate Plus, such as tears, holes or gaps around service penetrations, must be repaired. Damaged areas can be repaired by covering with new material lapping the damaged area by at least 150 mm and taping, or by taping small tears.

Inspections

14.7 The Technical Literature must be referred to during the inspection of Watergate Plus installations.

Basis of Appraisal

The following is a summary of the technical investigations carried out:

Tests

15.1 The following tests have been carried out on Watergate Plus in accordance with NZBC Acceptable Solution E2/AS1, Table 23: tensile strength, edge-tear resistance and resistance to water vapour transmission in accordance with AS/NZS 4200.1, shrinkage in accordance with AS/NZS 4201.3, resistance to water penetration in accordance with AS/NZS 4201.4, surface water absorbency in accordance with AS/NZS 4201.6, pH of extract in accordance with AS/NZS 1301.421s and air resistance to BS 6538.3. A range of these tests were completed before and after Watergate Plus was exposed to UV light.

15.2 The flammability index of Watergate Plus has been evaluated in accordance with AS/NZS 1530.2.

Readers are advised to check the validity of this Appraisal by referring to the Valid Appraisals listing on the BRANZ website, or by contacting BRANZ.

Other Investigations

16.1 A durability opinion has been given by BRANZ technical experts.

16.2 An evaluation of the expected performance of Watergate Plus in direct contact with metal wall cladding has been completed by BRANZ.

16.3 The practicability of installation of Watergate Plus has been assessed by BRANZ and found to be satisfactory.

16.4 The Technical Literature, including installation instructions, has been examined by BRANZ and found to be satisfactory.

Quality

17.1 The manufacture of Watergate Plus has not been examined by BRANZ, but details of the methods adopted for quality control and the quality of the materials used, have been obtained and found to be satisfactory.

17.2 The quality of supply to the market is the responsibility of Thermakraft Limited.

17.3 Building designers are responsible for the design of the building, and for the incorporation of the wall underlay into their design in accordance with the instructions of Thermakraft Limited.

17.4 Quality of installation is the responsibility of the installer in accordance with the instructions of Thermakraft Limited.

Sources of Information

- AS 1530.2: 1993 Test for flammability of materials.
- AS/NZS 1301.421s: 1998 Determination of the pH value of aqueous extracts of paper, board and pulp - Cold extraction method.
- AS/NZS 4200.1: 1994 Pliable building membranes and underlays - Materials.
- AS/NZS 4201.1: 1994 Pliable building membranes and underlays - Methods of test – Resistance to dry delamination.
- AS/NZS 4201.2: 1994 Pliable building membranes and underlays - Methods of test – Resistance to wet delamination.
- AS/NZS 4201.3: 1994 Pliable building membranes and underlays - Methods of test – Shrinkage.
- AS/NZS 4201.4: 1994 Pliable building membranes and underlays - Methods of test – Resistance to water penetration.
- AS/NZS 4201.6: 1994 Pliable building membranes and underlays - Methods of test – Surface water absorbency.
- BS 6538.3: 1987 Method for determination of air permeance using the Garley apparatus.
- NZS 2295: 2006 Pliable, permeable building underlays
- NZS 3604: 2011 Timber-framed buildings.
- NASH Building Envelope Solutions: 2019 Light steel framed buildings.
- NASH Standard Part Two: 2019 Light Steel Framed Buildings
- Ministry of Business, Innovation and Employment Record of Amendments - Acceptable Solutions, Verification Methods and Handbooks.
- The Building Regulations 1992.

Readers are advised to check the validity of this Appraisal by referring to the Valid Appraisals listing on the BRANZ website, or by contacting BRANZ.

Amendments

Amendment No. 1, dated 30 November 2018

This Appraisal has been amended to change the Appraisal name to Watergate 295 Synthetic Underlay and to update Table 1.

Amendment No. 2, dated 15 February 2019

This Appraisal has been amended to change the Appraisal name to Watergate Plus Wall Underlay.

Amendment No. 3, dated 26 February 2020

This Appraisal has been amended to change the Appraisal name to Watergate Plus, include roll size of 3.0 m x 30 m, update Table 1 and update NZBC referenced documents.

Amendment No. 4, dated 01 March 2021

This Appraisal has been amended to update the roll sizes available. Refer Table 1.

Readers are advised to check the validity of this Appraisal by referring to the Valid Appraisals listing on the BRANZ website, or by contacting BRANZ.

BRANZ

In the opinion of BRANZ, Watergate Plus Wall Underlay is fit for purpose and will comply with the Building Code to the extent specified in this Appraisal provided it is used, designed, installed and maintained as set out in this Appraisal.

The Appraisal is issued only to Thermakraft Limited, and is valid until further notice, subject to the Conditions of Appraisal.

Conditions of Appraisal

1. This Appraisal:
   a) relates only to the product as described herein;
   b) must be read, considered and used in full together with the Technical Literature;
   c) does not address any Legislation, Regulations, Codes or Standards, not specifically named herein;
   d) is copyright of BRANZ.
2. Thermakraft Limited:
   a) continues to have the product reviewed by BRANZ;
   b) shall notify BRANZ of any changes in product specification or quality assurance measures prior to the product being marketed;
   c) abides by the BRANZ Appraisals Services Terms and Conditions;
   d) warrants that the product and the manufacturing process for the product are maintained at or above the standards, levels and quality assessed and found satisfactory by BRANZ pursuant to BRANZ's Appraisal of the product.
3. BRANZ makes no representation or warranty as to:
   a) the nature of individual examples of, batches of, or individual installations of the product, including methods and workmanship;
   b) the presence or absence of any patent or similar rights subsisting in the product or any other product;
   c) any guarantee or warranty offered by Thermakraft Limited.
4. Any reference in this Appraisal to any other publication shall be read as a reference to the version of the publication specified in this Appraisal.
5. BRANZ provides no certification, guarantee, indemnity or warranty, to Thermakraft Limited or any third party.

For BRANZ

Chelydra Percy
Chief Executive

Date of Issue:
21 September 2017

Readers are advised to check the validity of this Appraisal by referring to the Valid Appraisals listing on the BRANZ website, or by contacting BRANZ.

Thermakraft



Product Data Sheet

ALUBAND

Bituminous adhesive flexible window flashing tape.

Aluband is designed specifically as a premium window flashing tape and forms part of the Thermakraft One Wrap System. Made with a heavy bituminous adhesive, the product provides high strength bond and excellent abrasion resistance.

Aluband comes in four roll sizes:

Product Code	Roll Size	Rolls Per Carton
ALU075025	75mm x 25m	12
ALU150010	150mm x 10m	6
ALU150025	150mm x 25m	6
ALU200025	200mm x 25m	4

Smarter products. Better buildings.
thermakraft.co.nz

BRANZ Appraised
Appraisal No.878 [2019]

Aluband

Bituminous adhesive flexible window flashing tape.

Scope of Use

Thermakraft Aluband Window Flashing Tapes can be used within the following scope:

- Installed into and around frame joinery opening over the wall underlay and exposed frame to cover both the face and edge of the opening framing as a secondary weather resistant barrier.
- Installed at joinery heads to seal flashing upstands to the wall underlay.
- To assist the overall weathertightness performance of window and door joinery installations.
- To be used in conjunction with air seals and joinery flashing systems. Installer must check for air seal product compatibility with Aluband Window Flashing Tape.
- Thermakraft Aluband Window Flashing Tape must be used with Thermakraft Corner Moulded Pieces (on windowsill corners).
- Situated in NZS3604 Wind Zones up to, and including 'Extra High'.

General

- Compatible with all Thermakraft building underlays.
- Unaffected by LOSP or other solvent based treated timber. However, LOSP or other solvent based treated timber must have sufficient time for the solvent chemical to flash off in well ventilated area. Recommended minimum 7 days.
- Thermakraft corner moulds MUST be used at flashing corners (see installation guide).

Limitations

- Must NOT be exposed to the weather/UV for more than 42 days.
- Should be installed when temperatures are above 5ºC.
- NOT designed to overcome poor detailing and workmanship of the window or door joinery installation.
- Bitumen may react with window sealants. Always check compatibility before use.

Compliance:

- Aluband should be used within the product scope limitations of NZBC Acceptable Solution E2/AS1, Paragraph 1.1;
- Can be used on buildings constructed with timber and steel framing complying with the NZBC;
- With a risk score of 0-20, calculated in accordance with NZBC Acceptable Solution E2/AS1, Table 2; and,
- Can be used with wall cladding systems complying with NZBC Acceptable Solution E2/AS1.

Durability:

- Thermakraft Aluband Window Flashing Tape will meet the Performance Requirements of NZBC Clauses B2, Durability (B2.3.1 [a] 50 years*, B2.3.1 [b] 15 years* and B2.3.2), E2 External Moisture Performance and F2 Hazardous Building Materials.

* **Note:** When the external cladding is maintained according to the cladding manufacturer's instructions and the cladding remains weather resistant, Thermakraft Aluband Window Flashing Tape is expected to have a serviceable life equal to that of the cladding.

- Thermakraft Aluband Window Flashing Tape has a serviceable life expectancy equal to that of the cladding, when installed in accordance with this technical specification and in accordance to the product installation guide, provided it is not exposed to the weather or ultra-violet (UV) light for more than 42 days, or is not damaged upon installation.
- Thermakraft Aluband Window Flashing Tape is designed to work on all building underlays that meet the requirements of NZBC E2/AS1 Table 23, and on all Thermakraft BRANZ Appraised wall underlays.

Product Warranty

Standard Thermakraft warranty applies. Refer to Thermakraft Warranty Statement for further details. This is available online at **thermakraft.co.nz** or call **0800 806 595.**

The recommendations contained in Thermakraft's literature are based on good building practice, but are not an exhaustive statement of all relevant information and are subject to any conditions contained in the Warranty. All product dimensions and performance claims are subject to any variation caused by normal manufacturing process and tolerances. Furthermore, as the successful performance of the relevant system depends on numerous factors outside the control of Thermakraft (for example quality of workmanship and design), Thermakraft shall not be liable for the recommendations in that literature and the performance of the Product, including its suitability for any purpose or ability to satisfy the relevant provisions of the Building Code, regulations and standards. Literature subject to change without notification. Latest documentation can be found on the website. E&OE.

Issue 5, January 2020

BRANZ Appraised
Appraisal No. 878 [2019]

THERMAKRAFT ALUBAND WINDOW FLASHING TAPE



Appraisal No. 878 (2019)

This Appraisal replaces BRANZ Appraisal No. 878 (2014)

Amended 26 March 2021

BRANZ Appraisals

Technical Assessments of products for building and construction.

Thermakraft Limited
PO Box 58 112
Greenmount
Auckland
Tel: 09 273 3727
Fax: 09 273 3726
Free phone: 0800 806 595
www.thermakraft.co.nz

BRANZ
1222 Moonshine Rd,
RD1, Porirua 5381
Private Bag 50 908
Porirua 5240,
New Zealand
Tel: 04 237 1170
branz.co.nz

Product

1.1 Thermakraft Aluband Window Flashing Tape in conjunction with the Thermakraft Corner Moulded Piece is a flexible flashing tape system for use around framed joinery openings as a secondary weather resistant barrier.

1.2 The system is installed into and around the framed joinery opening over the wall underlay and exposed frame to cover both the face and edge of the opening framing. Thermakraft Aluband Window Flashing Tape is also used at joinery heads to seal flashing upstands to the wall underlay.

Scope

Timber Framing

2.1 The Thermakraft Aluband Window Flashing Tape has been appraised for use as a flexible flashing tape with external wall cladding for timber-framed buildings within the following scope:

- the scope limitations of NZBC Acceptable Solution E2/AS1, Paragraph 1.1 for timber-framed buildings; and
- with a risk score of 0-20, calculated in accordance with NZBC Acceptable Solution E2/AS1, Table 2; and,
- situated in NZS 3604 Wind Zones up to, and including, Extra High.

Steel Framing

2.2 The Thermakraft Aluband Window Flashing Tape has also been appraised for use as a flexible flashing tape with external wall cladding for steel-framed buildings within the following scope:

- the scope limitations of NASH Building Envelope Solutions Paragraph 1.1 for steel-framed buildings; and,
- with a risk score of 0-20, calculated in accordance with NASH Building Envelope Solutions; and,
- situated in NASH Standard Part 2 Wind Zones up to, and including, Extra High.

Specific Design

2.3 The Thermakraft Aluband Window Flashing Tape has also been appraised for weathertightness when used on buildings subject to specific design up to an ultimate limit state (ULS) wind pressure of 2.5 kPa with wall cladding systems complying with NZBC Acceptable Solution E2/AS1 or a valid BRANZ Appraisal that specifies a flexible flashing system; and, with flexible wall underlays compatible with the flashing tape and complying with the NZBC; and, situated in NZS 3604 Wind Zones up to, and including, Extra High (refer to Paragraph 7.3).

Readers are advised to check the validity of this Appraisal by referring to the Valid Appraisals listing on the BRANZ website, or by contacting BRANZ.

Building Regulations

New Zealand Building Code (NZBC)

3.1 **In the opinion of BRANZ, Thermakraft Aluband Window Flashing Tape, if designed, used, installed and maintained in accordance with the statements and conditions of this Appraisal, will meet or contribute to meeting the following provisions of the NZBC:**

Clause B2 DURABILITY: Performance B2.3.1 (b) 15 years and B2.3.2. Thermakraft Aluband Window Flashing Tape meets these requirements. See Paragraphs 8.1 and 8.2.

Clause E2 EXTERNAL MOISTURE: Performance E2.3.2. Thermakraft Aluband Window Flashing Tape contributes to meeting this requirement. See Paragraphs 7.1-7.4 and 11.1.

Clause F2 HAZARDOUS BUILDING MATERIALS: Performance F2.3.1. Thermakraft Aluband Window Flashing Tape meets this requirement.

Technical Specification

4.1 System components and accessories supplied by Thermakraft Limited are:

- **Thermakraft Aluband Window Flashing Tape** is a polymeric faced, bituminous modified, self-adhesive tape with a release backing paper. The tape is supplied in rolls 200, 150 and 75 mm wide x 25 m long and 150 mm wide x 10 m long. The rolls are wrapped in clear polythene film.
- **The Thermakraft Corner Moulded Piece** is made from inert polyethylene and is coloured orange. It is used in conjunction with the Thermakraft Aluband Window Flashing Tape and building underlays as part of the Thermakraft Aluband Window Flashing Tape system.
- **The Thermakraft Tool** is used to ensure proper adhesion of the Thermakraft Aluband Window Flashing Tape and to achieve a tight fit into corners.

4.2 Accessories used with the system which are supplied by the installer are:

- **Thermakraft Corner Moulded Piece Fixings** - staples, clouts or other temporary fixings to attach the corner mould to the framing prior to the installation of the Thermakraft Aluband Window Flashing Tape.
- **Scotch® Super 77™ Multipurpose Adhesive** - a clear spray primer.

Handling and Storage

5.1 Handling and storage of all materials supplied by Thermakraft Limited, whether on-site or off-site, is under the control of the installer. Thermakraft Aluband Window Flashing Tape and accessories must be protected from damage and weather. Rolls must be stored under cover, in clean, dry conditions away from direct exposure to sunlight.

Technical Literature

6.1 Refer to the Appraisals listing on the BRANZ website for details of the current Technical Literature for Thermakraft Aluband Window Flashing Tape. The Technical Literature must be read in conjunction with this Appraisal. All aspects of design, use, installation and maintenance contained in the Technical Literature and within the scope of this Appraisal must be followed.

Design Information

General

7.1 Thermakraft Aluband Window Flashing Tape meets the requirements of AC 148: 2001 which is an alternative solution to the version of AC 148 referenced by NZBC Acceptable Solution E2/AS1 Paragraph 9.1.5 b) and NASH Building Envelope Solutions Paragraph 9.1.5 b). The installation method for Thermakraft Aluband Window Flashing Tape is an alternative solution to the installation method shown within NZBC Acceptable Solution E2/AS1, Figures 72A and 72B and NASH Building Envelope Solutions, Figures 72A and 72B.

Readers are advised to check the validity of this Appraisal by referring to the Valid Appraisals listing on the BRANZ website, or by contacting BRANZ.

7.2 The use of flexible flashing systems around window and door joinery openings is critical to assist the overall weathertightness performance of window and door joinery installations.

7.3 Thermakraft Aluband Window Flashing Tape is suitable for use over flexible wall underlays compatible with the flashing tape in NZS 3604 Wind Zones up to, and including, Extra High. In the Extra High Wind Zone, the flexible underlay must be installed over a rigid underlay complying with NZBC Acceptable Solution E2/AS1, Table 23 or NASH Building Envelope Solutions, Table 23.

7.4 Thermakraft Aluband Window Flashing Tape is designed to prevent air leakage and water penetration around window and door openings at framing junctions (e.g. at the sill trimmer and opening stud junction), and to keep any water that gets past the cladding, or through the joinery, from direct contact with the framing timber.

7.5 Thermakraft Aluband Window Flashing Tape is not designed to overcome poor detailing and workmanship of the window or door joinery installation. The system must not be considered in isolation, but be considered as part of the wall cladding system. Thermakraft Aluband Window Flashing Tape is designed to be used in conjunction with air seals and joinery flashing systems, not as a substitute.

7.6 When Thermakraft Aluband Window Flashing Tape is used in conjunction with LOSP (light organic solvent preservative) treated timber, the solvent from the timber treatment must be allowed to evaporate (generally at least one week) prior to the installation of the system.

Durability

8.1 Assessment of durability to meet the NZBC is based on difficulty of access and replacement, and the ability to detect failure of Thermakraft Aluband Window Flashing Tape both during normal use and maintenance of the building.

Serviceable Life

8.2 Provided it is not exposed to the weather or ultraviolet (UV) light for a total of more than 42 days, and provided the exterior cladding is maintained in accordance with the cladding manufacturer's instructions and the cladding remains weather resistant, Thermakraft Aluband Window Flashing Tape is expected to have a serviceable life equal to that of the cladding.

Maintenance

9.1 No maintenance is required for Thermakraft Aluband Window Flashing Tape. Regular checks, at least annually, must be made of the junctions between the joinery and wall cladding to ensure that they are maintained weathertight and that the primary means of weather resistance for the junction e.g. flashing, sealant, etc. continues to perform its function, to ensure that water will not penetrate the cladding.

Prevention of Fire Occurring

10.1 Separation or protection must be provided to Thermakraft Aluband Window Flashing Tape from heat sources such as fireplaces, heating appliances and chimneys. Part 7 of NZBC Verification Method C/VM1 and Acceptable Solution C/AS1, and Acceptable Solution C/AS2 provide methods for separation and protection of combustible materials from heat sources.

External Moisture

11.1 Where a cladding manufacturer specifies the use of generic flashing tapes around window and door joinery openings at framing junctions as part of their system, or they specify the use of flexible flashing tapes that comply with NZBC E2/AS1, Paragraph 9.1.5 b) or NASH Building Envelope Solutions Paragraph 9.1.5 b), Thermakraft Aluband Window Flashing Tape may be used.

Readers are advised to check the validity of this Appraisal by referring to the Valid Appraisals listing on the BRANZ website, or by contacting BRANZ.

Installation Information

Installation Skill Level Requirements

12.1 All design and building work must be carried out in accordance with the Thermakraft Aluband Window Flashing Tape Technical Literature and this Appraisal by competent and experienced tradespersons conversant with flashing tapes. Where the work involves Restricted Building Work (RBW) this must be completed by, or under the supervision of, a Licensed Building Practitioner (LBP) with the relevant License class.

General

13.1 The selected wall underlay must be installed in accordance with the manufacturer's instructions, and must completely cover the joinery opening. The underlay is then cut on a 45° angle away from each corner of the opening so the flaps can be folded into the opening and secured to the interior face of the timber framing.

13.2 Fit a Thermakraft Corner Moulded Piece into each of the bottom corners to create a seal at the corner junction. The corner piece must be fixed to the framing with staples or clouts.

13.3 Before the Thermakraft Aluband Window Flashing Tape is applied, the substrate surfaces must be clean, dry and free from any surface contaminants such as dust and grease that may cause loss of adhesion. When installing Thermakraft Aluband Window Flashing Tape on difficult to bond substrates, Scotch® Super 77™ Multipurpose Adhesive may be used. Ensure that the wall underlay/substrate is dry and free of dirt before applying the spray adhesive. Apply a light spray/coating of the spray adhesive onto the underlay/substrate. Wait for a minute to allow the spray adhesive to become tacky. When tacky to the touch, apply the flashing tape in the normal manner.

13.4 A length of Thermakraft Aluband Window Flashing Tape must be cut to the length of the sill plus 400 mm. The tape is installed flush with the interior face of the opening and is applied along the entire length of the sill and 200 mm up each jamb. The overhanging tape is cut at the corner of the opening to allow the tape to be folded onto the face of the building underlay. The Thermakraft Tool must be used to ensure that adequate adhesion of the tape is achieved and that the tape is installed tight into the sill/jamb junction.

13.5 A 400 mm length of Thermakraft Aluband Window Flashing Tape must be installed 200 mm down the jamb and 200 mm along the lintel at each of the top corners of the window or door joinery opening. A 75 mm wide x 100 mm long sealing tape 'butterfly' must be installed at 45° across the corner of the head/jamb junction overlapping the corner by 3 mm to create a seal at the corner junction.

13.6 Thermakraft Aluband Window Flashing Tape must not be stretched. To avoid wastage, the tape can be lapped 100 mm minimum onto itself without reducing the performance of the Thermakraft Aluband Window Flashing Tape system.

13.7 If the Thermakraft Aluband Window Flashing Tape is exposed to the weather or UV light for more than 42 days, then it must be replaced with new material.

Installation Temperature

13.8 Thermakraft Aluband Window Flashing Tape must not be installed at temperatures of less than 5°C.

Inspections

13.9 The Technical Literature must be referred to during the inspection of Thermakraft Aluband Window Flashing Tape installations.

Readers are advised to check the validity of this Appraisal by referring to the Valid Appraisals listing on the BRANZ website, or by contacting BRANZ.

Basis of Appraisal

The following is a summary of the technical investigations carried out:

Tests

14.1 Testing of Thermakraft Aluband Window Flashing Tape has been completed by BRANZ to the requirements of ICC Evaluation Service Acceptance Criteria for Flashing Materials AC 148: 2001. The adhesion of Thermakraft Aluband Window Flashing Tape to black bituminous Kraft building paper complying with the requirements of NZBC Acceptable Solution E2/AS1, Table 23 or NASH Building Envelope Solutions Table 23 and selected other synthetic wall underlays has been tested and found to be satisfactory.

Other Investigations

15.1 An assessment was made of the durability of Thermakraft Aluband Window Flashing Tape by BRANZ technical experts.

15.2 Site inspections were carried out by BRANZ to examine the practicability of installation.

15.3 The Technical Literature has been reviewed by BRANZ and found to be satisfactory.

Quality

16.1 The manufacture of Thermakraft Aluband Window Flashing Tape has not been examined by BRANZ, but details of the quality and composition of the materials used were obtained and found to be satisfactory.

16.2 The quality of supply to the market is the responsibility of Thermakraft Limited.

16.3 Designers are responsible for the building design, and building contractors are responsible for the quality of installation of framing systems and wall underlays in accordance with the instructions of the designer.

16.4 The quality of installation, handling and storage on site is the responsibility of the installer in accordance with the instructions of Thermakraft Limited.

Sources of Information

- ICC Evaluation Service, Inc, AC148 Acceptable Criteria for Flexible Flashing Materials, July 2001.
- NZS 3604: 2011 Timber-framed buildings.
- NASH Building Envelope Solutions: 2019 Light steel framed buildings.
- NASH Standard Part Two: 2019 Light steel framed buildings.
- Ministry of Business, Innovation and Employment Record of amendments - Acceptable Solutions, Verification Methods and handbooks.
- The Building Regulations 1992.

Amendments

Amendment No 1, dated 26 March 2021

This Appraisal has been amended to include NASH Standards and update the technical specifications.

Readers are advised to check the validity of this Appraisal by referring to the Valid Appraisals listing on the BRANZ website, or by contacting BRANZ.

BRANZ

In the opinion of BRANZ, Thermakraft Aluband Window Flashing Tape is fit for purpose and will comply with the Building Code to the extent specified in this Appraisal provided it is used, designed, installed and maintained as set out in this Appraisal.

The Appraisal is issued only to Thermakraft Limited, and is valid until further notice, subject to the Conditions of Appraisal.

Conditions of Appraisal

1. This Appraisal:
   a) relates only to the product as described herein;
   b) must be read, considered and used in full together with the Technical Literature;
   c) does not address any Legislation, Regulations, Codes or Standards, not specifically named herein;
   d) is copyright of BRANZ.
2. Thermakraft Limited:
   a) continues to have the product reviewed by BRANZ;
   b) shall notify BRANZ of any changes in product specification or quality assurance measures prior to the product being marketed;
   c) abides by the BRANZ Appraisals Services Terms and Conditions;
   d) warrants that the product and the manufacturing process for the product are maintained at or above the standards, levels and quality assessed and found satisfactory by BRANZ pursuant to BRANZ's Appraisal of the product.
3. BRANZ makes no representation or warranty as to:
   a) the nature of individual examples of, batches of, or individual installations of the product, including methods and workmanship;
   b) the presence or absence of any patent or similar rights subsisting in the product or any other product;
   c) any guarantee or warranty offered by Thermakraft Limited.
4. Any reference in this Appraisal to any other publication shall be read as a reference to the version of the publication specified in this Appraisal.
5. BRANZ provides no certification, guarantee, indemnity or warranty, to Thermakraft Limited or any third party.

For BRANZ

Chelydra Percy
Chief Executive
Date of Issue:
18 December 2019

Readers are advised to check the validity of this Appraisal by referring to the Valid Appraisals listing on the BRANZ website, or by contacting BRANZ.

engineering new zealand

ace new zealand

association of consulting and engineering

Building Code Clause(s) B1 & B2

PRODUCER STATEMENT – PS1 – DESIGN

ISSUED BY: PROCONSULT LIMITED (Design Firm) PROCONSULT JOB NO: 13611

TO: Gina Utting (Owner/Developer)

TO BE SUPPLIED TO: KAIPARA DISTRICT COUNCIL (Building Consent Authority)

IN RESPECT OF: Ribraft foundations (Description of Building Work)

AT: 752 Settlement Road, Hakaru (Address)

Town/City: Hakaru (Address) **LOT** 3 **DP** 560279 **SO**

We have been engaged by the owner/developer referred to above to provide:

STRUCTURAL ENGINEERING SERVICES TO DESIGN THE ABOVE - (as qualified in accordance with Appended Page 2)
(Extent of Engagement)

in respect of the requirements of Clause(s) B1 & B2 (refer Page 2) of the Building Code for:

☐ All or ■ Part only (as specified in the attachment to this statement), of the proposed building work.

The design carried out by us has been prepared in accordance with:

■ Compliance Documents issued by the Ministry of Business, Innovation & Employment .....B1/VM1.....+B1/VM4 or (verification method/acceptable solution)

☐ Alternative solution as per the attached schedule……

The proposed building work covered by this producer statement is described on the drawings titled:

Proposed new garage/sleepout - 752 Settlement Rd ……and numbered Sheet 5 ……;
together with the specification, and other documents set out in the schedule attached to this statement.

On behalf of the Design Firm, and subject to:
(i) Site verification of the following design assumptions Wiley Geotechnical - 23/06/2021 Gina Utting ……
(ii) All proprietary products meeting their performance specification requirements;

I believe on reasonable grounds that a) the building, if constructed in accordance with the drawings, specifications, and other documents provided or listed in the attached schedule, will comply with the relevant provisions of the Building Code and that b), the persons who have undertaken the design have the necessary competency to do so. I also recommend the following level of construction monitoring/observation:

☐ CM1 ■ CM2 ☐ CM3 ☐ CM4 ☐ CM5 (Engineering Categories) or ☐ as per agreement with owner/developer (Architectural)

I, ...Stewart Hobbs..... am: ■ CPEng #84415
(Name of Design Professional)

I am a member of: ☑ Engineering New Zealand and hold the following qualifications: BE, MBA, CPEng, FEngNZ.

The Design Firm issuing this statement holds a current policy of Professional Indemnity Insurance no less than $200,000*.
The Design Firm is a member of ACE New Zealand: ☐

SIGNED BY: .....STEWART HOBBS..... (Signature)……
(Name of Design Professional)

ON BEHALF OF .....PROCONSULT LIMITED ..... Date 03/09/2021
(Design Firm)

Note: This statement shall only be relied upon by the Building Consent Authority named above. Liability under this statement accrues to the Design Firm only. The total maximum amount of damages payable arising from this statement and all other statements provided to the Building Consent Authority in relation to this building work, whether in contract, tort or otherwise (including negligence), is limited to the sum of $200,000.*

This form is to accompany **Form 2 of the Building (Forms) Regulations 2004** for the application of a Building Consent.

THIS FORM AND ITS CONDITIONS ARE COPYRIGHT TO ACE NEW ZEALAND AND ENGINEERING NEW ZEALAND

PRODUCER STATEMENT – PS1 – DESIGN (Cont'd) Building Code Clause(s) B1 & B2

ISSUED BY: PROCONSULT LIMITED (Design Firm) PROCONSULT JOB NO: 13611

TO: Gina Utting
(Owner/Developer)

TO BE SUPPLIED TO: KAIPARA DISTRICT COUNCIL
(Building Consent Authority)

IN RESPECT OF: Ribraft foundations
(Description of Building Work)

AT: 752 Settlement Road, Hakaru
(Address)

Town/City Hakaru **LOT** 3 **DP** 560279 **SO**
(Address)

This producer statement excludes items covered by NZS 3604: 2011 for B1 and B2 and only applies to specific engineering design items identified on Page 1 of this Producer Statement and in the accompanying calculations prepared by ProConsult Limited and excludes the following:

PROPRIETARY ITEMS WHETHER OR NOT COVERED BY A SEPARATE PS1

* .....
* .....
* .....

Durability (B2):

We note that there is no effective verification method for B2 contained within the Building Code and therefore confirm that for the structural elements shown in our documentation the following applies:

Timber: Timber treatment has been selected in accordance with Table 1A of B2/AS1.
Concrete: Concrete covers have been selected in accordance with NZS 3101, Part 1, Section 3. (B2/AS1)
Mild Steel: Steel protection has been specified in accordance with the "Guide to the protection of structural steel against atmospheric corrosion by the use of protective coatings" AS/NZS 2312 and "Durability requirements for steel structures and components" SNZ TS 3404:2018. We note that this is on a time to first maintenance basis and assumes ongoing maintenance.

SNZ TS3404 C1.6 states: "The specified intended life of the building" from Clause B2 of the New Zealand Building Code does not need to be the time to first major maintenance considered when selecting an appropriate method of corrosion protection. A shorter time to first major maintenance could be selected in conjunction with an inspection and maintenance programme, which together will meet the durability provisions of NZBC Clause B2."

Site Observations:

Inspections of the works shall comprise site observations in accordance with

Engineering NZ ☐ CM1 ■ CM2 ☐ CM3 ☐ CM4 ☐ CM5 (Engineering Categories) for the following items:

Ribraft foundations pre-pour

.....

.....

.....

or as otherwise requested by our Client during the course of the works.

SIGNED BY: .....STEWART HOBBS..... (Signature) .....
(Name of Design Professional)

ON BEHALF OF .....PROCONSULT LIMITED ..... Date 03/09/2021
(Design Firm)

GUIDANCE ON USE OF PRODUCER STATEMENTS

Producer statements were first introduced with the Building Act 1991. The producer statements were developed by a combined task committee consisting of members of the New Zealand Institute of Architects, Institution of Professional engineers New Zealand (now Engineering New Zealand), ACE New Zealand in consultation with the Building Officials Institute of New Zealand. The original suit of producer statements has been revised at the date of this form as a result of enactment of the Building Act (2004) by these organisations to ensure standard use within the industry.

The producer statement system is intended to provide Building Consent Authorities (BCAs) with reasonable grounds for the issue of a Building Consent or a Code Compliance Certificate, without having to duplicate design or construction checking undertaken by others.

PS1 Design Intended for use by a suitably qualified independent design professional in circumstances where the BCA accepts a producer statement for establishing reasonable grounds to issue a Building Consent;

PS2 Design Review Intended for use by a suitably qualified independent design professional where the BCA accepts an independent design professional's review as the basis for establishing reasonable grounds to issue a Building Consent;

PS3 Construction Forms commonly used as a certificate of completion of building work are Schedule 6 of NZS 3910:2013 or Schedules E1/E2 of NZIA's SCC 2011[2]

PS4 Construction Review Intended for use by a suitably qualified independent design professional who undertakes construction monitoring of the building works where the BCA requests a producer statement prior to issuing a Code Compliance Certificate.

This must be accompanied by a statement of completion of building work (Schedule 6).

The following guidelines are provided by ACE New Zealand and Engineering New Zealand to interpret the Producer Statement.

Competence of Design Professional

This statement is made by a Design Firm that has undertaken a contract of services for the services named, and is signed by a person authorised by that firm to verify the processes within the firm and competence of its designers.

A competent design professional will have a professional qualification and proven current competence through registration on a national competence based register as a Chartered Professional Engineer (CPEng).

Membership of a professional body, such as Engineering New Zealand (formerly IPENZ) provides additional assurance of the designer's standing within the profession. If the design firm is a member of ACE New Zealand, this provides additional assurance about the standing of the firm.

Persons or firms meeting these criteria satisfy the term "suitably qualified independent design professional".

*Professional Indemnity Insurance

As part of membership requirements, ACE New Zealand requires all member firms to hold Professional Indemnity Insurance to a minimum level.

The PI Insurance minimum stated on the front of this form reflects standard, small projects. If the parties deem this inappropriate for large projects the minimum may be up to $500,000.

Professional Services during Construction Phase

There are several levels of service which a Design Firm may provide during the construction phase of a project (CM1-CM5 for Engineers[3]). The Building Consent Authority is encouraged to require that the service to be provided by the Design Firm is appropriate for the project concerned.

Requirement to provide Producer Statement PS4

Building Consent Authorities should ensure that the applicant is aware of any requirement for producer statements for the construction phase of building work at the time the building consent is issued as no design professional should be expected to provide a producer statement unless such a requirement forms part of the Design firm's engagement.

Attached Particulars

Attached particulars referred to in this producer statement refer to supplementary information appended to the producer statement.

Refer Also:

1 Conditions of Contract for Building & Civil Engineering Construction NZS 3910: 2013

2 NZIA Standard Conditions of Contract SCC 2011

Guideline on the Briefing & Engagement for Consulting Engineering Services (ACE New Zealand/Engineering New Zealand 2004)

4 PN Guidelines on Producer Statements

www.acenz.org.nz
www.engineeringnz.org

engineering new zealand

ace new zealand

association of consulting and engineering

Thermakraft™



Product Data Sheet

THERMAKRAFT 215

Self-supporting bituminous wall and roof underlay

Commonly referred to as “Building Paper” Thermakraft 215 is a self-supporting, kraft paper based, bituminous building underlay that is suitable for use on roofs and walls in residential buildings. It is vapour permeable, meaning that liquid water from the outside is prevented from penetrating but water vapour from the inside can pass through and escape the building envelope. Thermakraft 215 is easy to install.

Thermakraft 215 comes in two roll sizes:

1250mm wide	20m long	25m^2 coverage*
1250mm wide	40m long	50m^2 coverage*

* **Note:** m2 is the roll size for actual coverage, allow for laps and joins.

Smarter products. Better buildings.
thermakraft.co.nz

Thermakraft 215

Self-supporting bituminous wall and roof underlay

Scope of Use (Roof Application)

- Suitable with masonry tile, metal tile and profiled metal roof cladding.
- Direct fix or cavity fix.
- Can be used on roofs up to and including NZS 3604 'Extra High' wind zones.
- Refer to installation guide regarding underlay support requirements.
- Will provide temporary weather protection during construction (maximum 7 days), same day coverage recommended.

Scope of Use (Wall Application)

- Suitable for use with both timber and steel framing, either direct fix or in conjunction with an 18mm minimum drained cavity.
- Can be used with absorbent wall claddings (e.g. timber, brick or fibre cement) or non-absorbent wall claddings (e.g. metal or plastic).
- Can be used with masonry veneer in accordance with NZS 3604.
- Suitable for buildings situated in NZS3604 Building Wind Zones up to and including 'Very High'.
- Thermakraft 215 can be used as an air barrier to reduce wind entry and is highly water resistant.
- Will provide temporary weather protection during construction (maximum 28 days).

General

Unaffected by LOSP or other solvent based treated timber. However, LOSP or other solvent based treated timber must have sufficient time for the solvent chemical to flash off in well ventilated area. Recommended minimum 7 days.

Limitations

- In roofing applications must NOT be exposed to the weather or UV for more than 7 days.
- In wall applications must NOT be exposed to the weather or UV for more than 28 days.
- Must NOT be used under translucent sheeting.
- Is not fire retardant.
- Not suitable for School Property, please refer to Ministry of Education; Weather-Tightness & Durability requirements for School Property.

Compliance

Thermakraft 215 meets the requirements of NZBC Acceptable Solutions E2/AS1, Table 23 and NZS 2295:2006 for both wall & roof underlay.

Durability

Meets the Performance Requirements of NZBC Clause B2, Durability B2.3.1 (a) 50 years and B2.3.1 (b) 15 years, E2 External Moisture providing:

- It is installed in accordance to Thermakraft Installation Guide.
- Run length is no greater than 10 meters.
- Is NOT left exposed to the weather or UV for more than 7 days on roof.
- Is NOT left exposed to the weather or UV for more than 28 days on walls.
- Is installed by or under guidance of Licensed Building Practitioners.
- Is installed in accordance with the MRM Code of Practice.
- Is compatible with the cladding system used.*

* **Note:** roof cladding system compatibility testing must be done first before installation.

Property Performance

NZBC E2/AS1 Wall Underlay Requirements					
NZBC E2/AS1 Table 23 (NZS2295) Roof Underlay Properties	**Absorbency**	**Vapour Resistance**	**pH of Extract**	**Shrinkage**	**Water Resistance**
Property Performance Requirement	≥ 150gsm	≤ 7 MN.s/g	≥ 5.5 and ≤ 8	≤ 0.5%	100mm for 24 hrs
Property Performance	Pass	Pass	Pass	Pass	Pass

NZS2295:2006 Classification			
NZBC E2/AS1 Table 23 (NZS2295) Roof Underlay Properties	**Flammability Index**	**Wind Zone**	**NZS2295:2006 Index**
Property Performance Requirement		R2	R2
Property Performance	Non-Fire Retardant	Up to Extra High	Self - Support

Thermakraft 215

Self-supporting bituminous wall and roof underlay

Control of Condensation

In climatic regions where condensation risks are high, such as cold or high humidity areas, care needs to be taken in specifying the correct design and installation method to prevent moisture build-up in the roof cavities.

Factors which adversely affect the condensation risk in roofing systems include:

- Humid, and/or cold climatic regions.
- Warm/Skillion roof construction.
- Low roof cavity air volume and restricted air movement.
- Omitting Vapour Control Layers.
- Occupancy activities which have high moisture loading on conditioned spaces.
- Ceiling penetrations and entry of warm air into roof cavities.
- Low pitched roof.
- Bulk insulation.
- Building structures ability to naturally dry construction moisture.

Skillion and Warm Roof Construction are particularly sensitive to moisture accumulation and the design and installation of roof construction needs to take into account the higher condensation risks. Refer to MRM Code of Practice for details.

For passive ventilation of the roof space, it is recommended that all roof underlays are terminated at the ridge, and if not it should be slit or slotted to allow for passive ventilation. (For further information refer to the NZ MRM Roofing Code of Practice).

Product Warranty

Standard Thermakraft warranty applies. Refer to Thermakraft Warranty Statement for further details. This is available online at **thermakraft.co.nz** or call **0800 806 595.**

The recommendations contained in Thermakraft's literature are based on good building practice, but are not an exhaustive statement of all relevant information and are subject to any conditions contained in the Warranty. All product dimensions and performance claims are subject to any variation caused by normal manufacturing process and tolerances. Furthermore, as the successful performance of the relevant system depends on numerous factors outside the control of Thermakraft (for example quality of workmanship and design), Thermakraft shall not be liable for the recommendations in that literature and the performance of the Product, including its suitability for any purpose or ability to satisfy the relevant provisions of the Building Code, regulations and standards. Literature subject to change without notification. Latest documentation can be found on the website. E&OE.

Issue 6, November 2019

Thermakraft™



Product Data Sheet

WATERGATE PLUS

New Zealand's premium all-purpose, fire retardant wall wrap.

Watergate Plus is specifically designed as a wall underlay behind exterior wall cladding. Made from synthetic materials Watergate Plus is fire retardant, water resistant and vapour permeable. The water vapour transfer rate of the product has been optimised to minimise condensation risk in homes without compromising its primary water barrier properties.

Watergate Plus is part of the Thermakraft One Wrap System. Its unique construction allows for easier installation while maintaining best in class performance qualities.

Smarter products. Better buildings.
thermakraft.co.nz

CodeMark BRANZ-CM-1002

BRANZ Appraised
Appraisal No.695 [2017]

Watergate Plus

Premium Synthetic Wall Wrap

Watergate Plus comes in five roll sizes and two soffit roll sizes:

Roll Dimensions			
Product Code	**Width**	**Length**	**Coverage**
WGP1370025	1370mm wide	18.5m long	25m² coverage*
WGP1370050	1370mm wide	37.0m long	50m² coverage*
WGP1370100	1370mm wide	73.0m long	100m² coverage*
WGP2740050	2740mm wide	18.5m long	50m² coverage*
WGP2740100	2740mm wide	36.5m long	100m² coverage*

Soffit Roll Dimensions			
Product Code	**Width**	**Length**	**Coverage**
WGP600025SOF	685mm wide	36.5m long	25m² coverage*
WGP600050SOF	685mm wide	73.0m long	50m² coverage*

Custom Branding Available – Contact your Thermakraft Representative for more details

* **Note:** m² is the roll size. For actual coverage, allow for laps and joins.

Product Description

Watergate Plus is a two-layer laminated wall underlay combining a Polyester non-woven layer with a high quality vapour permeable film. This allows water vapour to pass through from inside the wall cavity whilst water from the exterior is kept out.

The product is simply fixed to timber framing using construction staples and is made to stretch around corners providing a tight fit and reducing the risk of staple tear. It will provide temporary weather protection during construction. (Max 90 Days).

Scope of Use

Watergate Plus can be used as a wall underlay on both residential and commercial buildings within the following scope:

- With absorbent wall claddings (e.g. timber, brick or fibre cement) or non-absorbent wall claddings (e.g. metal or plastic).
- Can be used with timber and steel framing, either directly fixed or in conjunction with an 18mm minimum drained cavity.
- With masonry veneer in accordance with NZBC Acceptable Solution E2/AS1 and E2/AS4.
- Situated in NZS3604 and NASH Building Wind Zones up to (and including) 'Very High' when used as a standalone flexible underlay, and "Extra High" when used as a flexible underlay over a rigid wall underlay.
- Is suitable as an air barrier in unlined wall spaces.
- Is suitable to be used in conjunction with thermal breaks on steel framed buildings.
- Refer to BRANZ Appraisal No 695 (2017) and CodeMark Certificate BRANZ-CM-1002 for full details.

General

- Fire retardant.
- Unaffected by LOSP or other solvent based treated timber. However, LOSP or other solvent based treated timber must have sufficient time for the solvent to flash off in a well ventilated area. Recommended minimum 7 days.

Limitations

- Must NOT be used as a roof underlay.
- Must NOT be exposed to the weather or UV for more than 90 days.
- Watergate Plus is NOT a vapour barrier.

Compliance

- Watergate Plus has been appraised with the scope limitations of NZBC Acceptable Solution E2/AS1, Paragraph 1.1 and E2/AS4, with regards to building height and floor plan area.
- Watergate Plus has also been BRANZ appraised for use on buildings subject to specific weathertightness design. Building designers are responsible for the building design and for the incorporation of Watergate Plus into their design in accordance with the declared properties and the instructions of Thermakraft Ltd.

Watergate Plus

Premium Synthetic Wall Wrap

Flammability Index

Thermakraft Watergate Plus Wall Underlay has an AS 1530 Part 2 Flammability Index of not greater than 5 and therefore meets the requirements of NZBC Acceptable Solutions C/AS2, Paragraph 4.17.8 b), for the surface finish requirements of suspended flexible fabric used as an underlay to exterior cladding that is exposed to view in occupied spaces.

Durability

Meets the Performance Requirements of NZBC Clauses B2, Durability (B2.3.1 (a) 50 years, B2.3.1 (b) 15 years and B2.3.2), E2 External Moisture (E2.3.2), and F2 Hazardous Building Materials F2.3.1, providing:

- It is not damaged.
- Installed in accordance with instruction guide.
- Is not left exposed for more than 90 days.
- Installed by or under guidance of Licensed Building Practitioners.
- Is compatible with cladding system used.*

* **Note:** specifiers and product user must confirm wall cladding system compatibility with the underlay before installation.

Product Warranty

Standard Thermakraft warranty applies. Refer to Thermakraft Warranty Statement for further details. This is available online at **thermakraft.co.nz** or call **0800 806 595.**

Property Performance

NZBC E2/AS1 Table 23 (NZS2295) Wall Underlay Properties	Absorbency	Vapour Resistance	pH of Extract	Shrinkage	Water Resistance	Air Resistance
Property Performance Requirement	≥ 100gsm	≤ 7 MN.s/g	≥ 6 and ≤ 9	≤ 0.5%	≥ 20mm	≥ 0.1 MN.s/m^3
Property Performance	Pass	Pass	Pass	Pass	Pass	Can be used as an air barrier

The recommendations contained in Thermakraft's literature are based on good building practice, but are not an exhaustive statement of all relevant information and are subject to any conditions contained in the Warranty. All product dimensions and performance claims are subject to any variation caused by normal manufacturing process and tolerances. Furthermore, as the successful performance of the relevant system depends on numerous factors outside the control of Thermakraft (for example quality of workmanship and design), Thermakraft shall not be liable for the recommendations in that literature and the performance of the Product, including its suitability for any purpose or ability to satisfy the relevant provisions of the Building Code, regulations and standards. Literature subject to change without notification. Latest documentation can be found on the website. E&OE.

Issue 9, September 2021

Thermakraft™

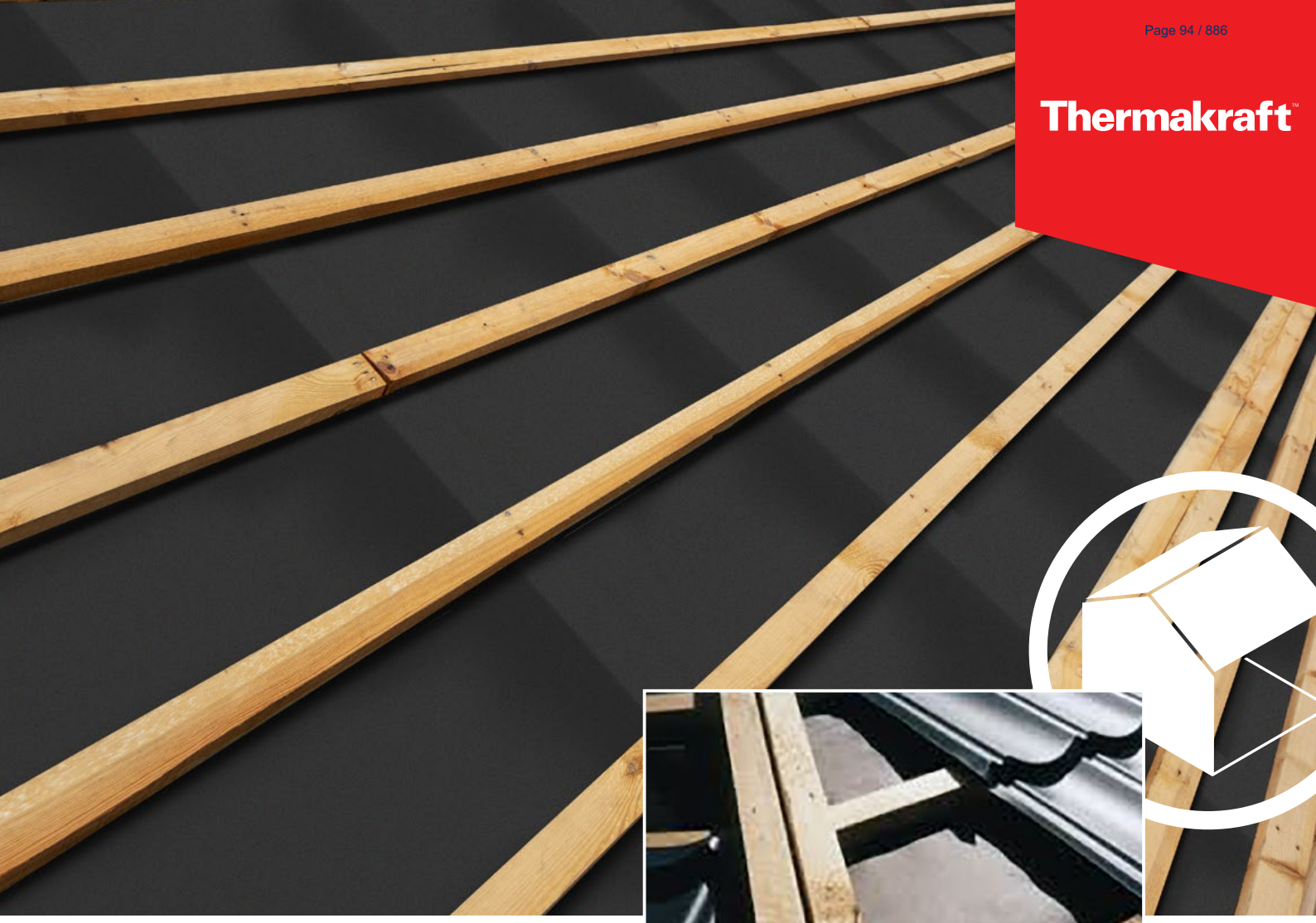

Installation Guide

THERMAKRAFT 215

Self-supporting bituminous wall and roof underlay

Commonly referred to as “Building Paper” Thermakraft 215 is a self-supporting, kraft paper based, bituminous building underlay that is suitable for use on roofs and walls in residential buildings. It is vapour permeable, meaning that liquid water from the outside is prevented from penetrating but water vapour from the inside can pass through and escape the building envelope. Thermakraft 215 is easy to install.

Smarter products. Better buildings.
thermakraft.co.nz

Installation Guide

Application Method (Roofing)

Thermakraft 215 is a bituminous building underlay used on roofs in residential buildings.

- Thermakraft 215 can be used in direct fix or cavity fix for roof construction.
- Run NO longer than 10m.

Long-run metal roofing/vertical or horizontal installation method

- Fix using stainless steel 8-12mm staples or 20mm flat head clouts, or appropriate proprietary fastenings on timber framed structure. Fixing at 300mm centres. Fixing types and requirements for steel framed structure can be found in the MRM Code of Practice.
- Refer to table below to determine underlay support requirements.

Roof Pitch	Span	Underlay Support Required	
		Horizontally Installed	Vertically Installed
≥ 10°	> 1200mm	Yes	Yes
	≤ 1200mm	No	No
< 10° (Min 3°)	> 1200mm	Yes	Yes
	≤ 1200mm	No	Yes

- Thermakraft 215 upper sheet lapped over lower sheets (shiplap) to ensure water is shed to the outer face.
  Note: Thermakraft 215 can move downwards. To prevent this, it must be "Captured" by the fastenings at each purlin. Horizontal fix must not be used on purlin distance greater than 1100mm to allow for 150mm laps.
- Must be laid firmly (tight/taut) without creases. All laps either vertical or horizontal must be a minimum of 150mm lap.
- When underlay support is required, Thermakraft recommend using AUSMESH Safety Mesh, AUSNET hexagonal netting or Thermastrap 201.
- Thermakraft 215 can be installed above the battens or purlins for profiled metal roof claddings and otherwise in accordance with NZBC E2/AS1.
- If required to achieve a lap seal (refer to NZ Metal Roofing Code of Practice), use Thermakraft Aluband window sealing tape or Thermakraft White General Purpose Tape.
- Thermakraft 215 will provide temporary weather protection during construction, same day coverage recommended. DO NOT over expose the product to the weather or UV for more than 7 days in any roof applications.
- Thermakraft 215 may be unwound to the full length from the gutter to the ridge. However, when ridge ventilation is required Thermakraft 215 may be terminated or slit at the ridge purlin to allow a free passage of air.
- Thermakraft 215 must NOT overhang the gutter line by more than 20 mm, or if eaves flashings are used, terminate on the upper side of the flashing. More details can be found in the MRM Code of Practice.
- Flue penetrations must have a minimum distance of 50mm from Thermakraft 215 (refer to NZ Metal Roof and Wall Cladding Code of Practice 10.11.5).
- Thermakraft 215 must be free of tears and punctures, fit tightly and be lap taped around all penetrations (except flue penetrations), to provide drainage for any condensation, or surface water from leaks.

Note: Do not use Aluband on penetrations where Polybutene water pipes have been installed. Refer Pipe Manufacturers for instructions on sealing penetrations.

Concrete/Metal tile roofing

- Thermakraft 215 must be laid over rafters prior to fixing the tile battens. The maximum span between rafters for Thermakraft 215 is 1200mm. Masonry tile roofs must have antiponding boards in accordance with NZBC E2/AS1 Paragraph 8.2.5.
- Installed Thermakraft may be laid over the top of the antiponding boards and draped into the gutter by no more than 20mm. Antiponding boards must be treated in accordance with NZS 3604.
- Do NOT Run Thermakraft 215 longer than 10m in length.

Application Method (Wall)

- Fix Thermakraft 215 underlay with printed side facing the exterior.
- Fix to all exterior walls from below bearers to the top plate. Pull the Thermakraft 215 underlay tight and fix securely to the frame with fasteners such as galvanized Little Grippers, 6mm-8mm staples or 20mm large head galvanized clouts at 300mm centres horizontally and vertically. Additional fasteners should be used around each opening to be cut out. Fixing types and requirements for steel framed structure can be found in the MRM Code of Practice.

Installation Guide

- When fixing Thermakraft 215 underlay to Steel framing the same procedures applies, use adhesive spray or tape or flat head screws to fasten to the framing or thermal break, the exterior cladding fastenings will act as the permanent fixings.
- Cover all windows and door openings with Thermakraft 215 underlay.
- It is recommended that the Thermakraft 215 underlay is not cut and prepared for window installation until the arrival of the windows. minimum of 150mm lap is required at joins, all vertical laps must be made over studs. Horizontal laps to be laid ship lap style allowing water to be shed to the outer face of the membrane.
- When windows and doors are ready for installation, the Thermakraft 215 underlay covering the openings should cut at 45° and folded into the opening and securely fastened. Thermakraft window flashing tapes are recommended as the window flashing system.
  Note: In accordance with NZBC Acceptable Solution E2/AS1, wall underlay must be prevented from bulging into the drained cavity. Where stud spacing is greater than 450mm Thermakraft stud strap run horizontal at 300 centres is an acceptable means of prevention.
- Once installed, Thermakraft 215 must not be left exposed to the weather or UV for a maximum of 28 days. Thermakraft 215 underlays will provide temporary weather protection during construction allowing work to continue. Internal linings and insulation must not be installed until the exterior cladding is completed.
- Fastenings behind Brick Veneer Cladding must have an equivalent service life to that of Brick Veneer (50 years). Refer to NZS 3604.
- Make good any forced tears with Thermakraft window flashing tapes. Any large areas which require repair may be covered with a second layer of underlay, a lap of 150mm is required.
- For wall cavity systems where stud spacings are greater than 450mm centres, another means of restraint is required on the flexible underlay to prevent insulation bulge (refer to E2/AS1).
- Thermakraft 215 underlay must be installed by a licensed building practitioner.

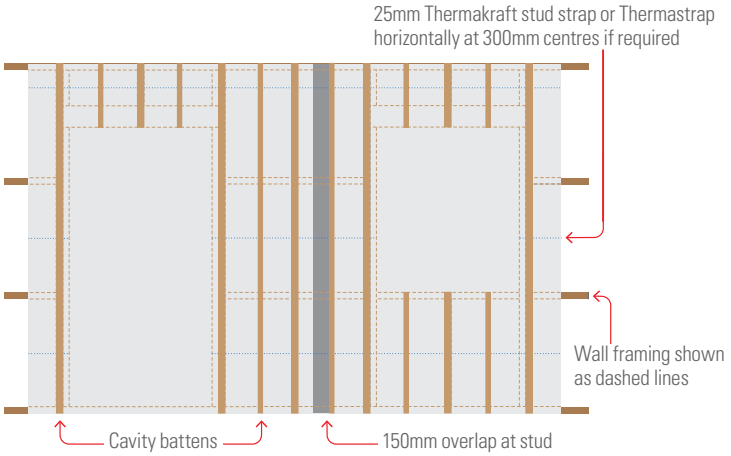

Application Tips

- Unaffected by LOSP or other solvent based treated timber. However, LOSP or other solvent based treated timber must have sufficient time for the solvent chemical to flash off in a well ventilated area. Recommended minimum 7 days.

Handling and Storage

Thermakraft 215 underlay must be handled with care to prevent damage such as tearing and roll deformation. Due to the width of the product, care should be taken when installing in windy conditions.

The product must be stored under cover well away from direct moisture, rainfall contact and sunlight (UV). Care should be taken not stack other materials on top of the product.

The recommendations contained in Thermakraft's literature are based on good building practice, but are not an exhaustive statement of all relevant information and are subject to any conditions contained in the Warranty. All product dimensions and performance claims are subject to any variation caused by normal manufacturing process and tolerances. Furthermore, as the successful performance of the relevant system depends on numerous factors outside the control of Thermakraft (for example quality of workmanship and design), Thermakraft shall not be liable for the recommendations in that literature and the performance of the Product, including its suitability for any purpose or ability to satisfy the relevant provisions of the Building Code, regulations and standards. Literature subject to change without notification. Latest documentation can be found on the website. E&OE.

Issue 1, November 2019



PROFILE TECHNICAL SUMMARY

(All dimensions are nominal and in mm.)

Corrugate lap



Corrugate 762 (Standard)
Dimensioned Drawing of Corrugate

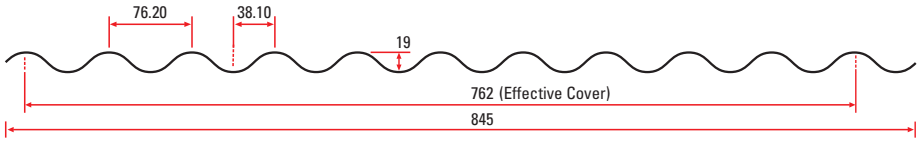

Corrugate 995
Dimensioned Drawing of Wide Corrugate

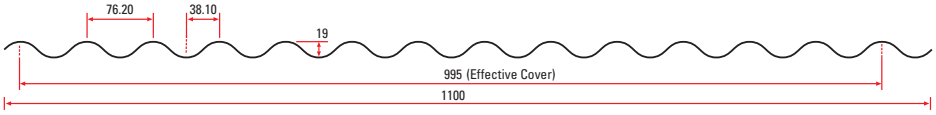

Minimum Pitch

The minimum roof pitch for Corrugate is 8 degrees (approx 1:7) and if end lapped 10 degrees (approx 1:6).

When a combination of sheets provide a run of in excess of 40 metres and up to 60 metres the roof pitch should be increased by 1 degree. Longer lengths require specific design.

When rainfall intensity exceeds 100mm/hour the minimum pitches need to be increased by a further 1 degree for every 10 metres of run over 40 metres

The building design pitch may need to be higher to take into account any cumulative deflections of the frame, purlin and roof sheeting or penetrations.

For curved roofing the roof cladding must **not** terminate at a pitch lower than permitted above.

Side laps of curved sheets must be sealed to any areas below the minimum pitches permitted above.

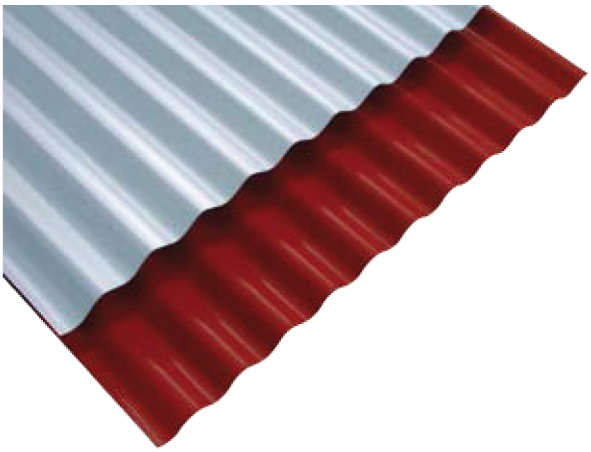

Branches: • Whangarei • Auckland • Pukekohe (Franklin Metal Folding & Roofing Ltd) • Hamilton • Taupo • Palmerston North • Wellington • Christchurch

- Manufactured custom cut to length subject to transport and site limitations.
- Sheet lengths in excess of 28 metres require specialised transportation.
- Maximum recommended sheet lengths for **Aluminium** is 10-12 metres for dark coloured and 12-15 metres for plain and light coloured. Refer to Roof Expansions Provisions of this summary.
- As sheet lengths increase higher transportation costs may be applicable.
- Sheet lengths for pre-curved material are subject to handling and transport limitations.

© ROOFING INDUSTRIES 2012 - RCR000

Information Table

Substrate Material	Steel		Aluminium	
Thickness	**.40mm BMT**	**.55mm BMT**	**.70mm BMT**	**.90mm BMT**
Aprox weight per lineal metre for substrate material (kg/lm)	3.2	4.27	1.84	2.37
Purlin Spacings -General	Refer to separate section.		Refer to separate section.	
Unsupported Overhang (mm)[1]	150	150	100	150
Drape Curved Roof -Minimum Radius (m)	12	10	12	10
Purlin Spacings for Curved Roofs -Intermediate (mm)	900	1200	800	1200
-End (mm)	600	800	550	800
Precurved Roof -Minimum Radius (mm)	N/R[2]	300	300	300
-Recommended Minimum Radius (mm)	N/R[2]	400	400	400

[1] Not suitable for roof access without additional support [2] N/R - Not recommended

This technical data sheet is for steel and aluminium based substrates. Corrugate can also be manufactured in other metals such as copper or titanium zinc. Refer to Roofing Industries.

Specification

Refer to our Full Specification on Masterspec, our website, and our Selection Guide.

Building Design / Performance Criteria / Product Selection

During the design of buildings, it is necessary for the designer to take into account a number of issues to ensure that the most appropriate roofing and cladding product is chosen.

Whilst aesthetics and product availability do play a part, the chosen profile must meet certain performance criteria. These are centred around the profile's ability to shed water from the roof and the ability of the product to span purlin and girt spacings and meet design criteria. The minimum pitch for this profile is outlined elsewhere within this literature.

In terms of purlin spans and girt spacing it is necessary to follow due process.

If a building is being designed and constructed in full accordance with E2/AS1 and roofing and cladding products as covered by that document are chosen, then it is necessary for the design spans and fixing methodology to comply with those of E2/AS1. However E2/AS1 states that the use of the manufacturers information may provide a more optimum spacing of fixings, and this is recommended by Roofing Industries.

Further where a building is outside of the scope of E2/AS1 and the building or parts thereof are of specific design then it is necessary for the roofing and cladding to be suitable for the design and vice versa.

Loadings referred to in Roofing Industries graphs are the result of testing to a serviceability limit state which is more conservative than an ultimate limit state as quoted by some manufacturers.

Our Design Graphs are presented in a form to allow the designer to select suitable products and purlin spacings.

For most roof installations the purlin spacings will be limited by the trafficable limitations of the profile or the structural design. It is then necessary for the designer to calculate the design wind load for the roofing and cladding in accordance with generally acceptable practice, by reference to AS/NZS 1170.2:2011 and/or NZS 3604:2011.

For a fuller explanation of this refer to the NZ Metal Roof and Wall Cladding Code of Practice. This result should be referenced to the Wind Load Span Design Graphs.

The purlin spacings should be limited to the lower of the trafficable limitations and design wind load with the capacity of the structure being greater than the design load for the application. However for roofs that are not able to be walked on and for wall cladding applications, the trafficable limitations may be exceeded providing the design wind loading criteria is met. However this should be done with caution as it may require considerable extra secondary fasteners within the laps.

The designer should always take into account in areas of heavy roof traffic, snow loadings, or where the roofing supports such items as air conditioning units, purlin spacing should be reduced accordingly. Consideration also needs to be given to limitations of purlin spacings for any translucent sheeting.

Reference should be made to the notes in the graphs.

It is our recommendation that for commercial and industrial roofing applications that .55mm BMT steel or .90mm BMT Aluminium is used as it has more resilience to damage particularly by other trades.

Underlay as per the project specifications should be used.

With an aluminium substrate steel netting should not be used where it may be in contact (either directly or through underlay degradation) with the aluminium roofing or cladding. Alternative material such as polypropylene strapping should be used where support is required, or the cladding separated from the underlay by a high density polystyrene batten or Thermakraft Drainage Matt or similar, and the use of an aluminium gutter flashing. This is also applicable to coated metal and zinc roofing in severe marine applications. As corrugated has a minimum pitch of 8°, self supporting paper (without the use of netting or other support) can generally be used, and in any case self supporting paper is recommended even when support is required, in the above situations.

WIND LOAD SPAN DESIGN GRAPH

Roofing - Steel Based Material

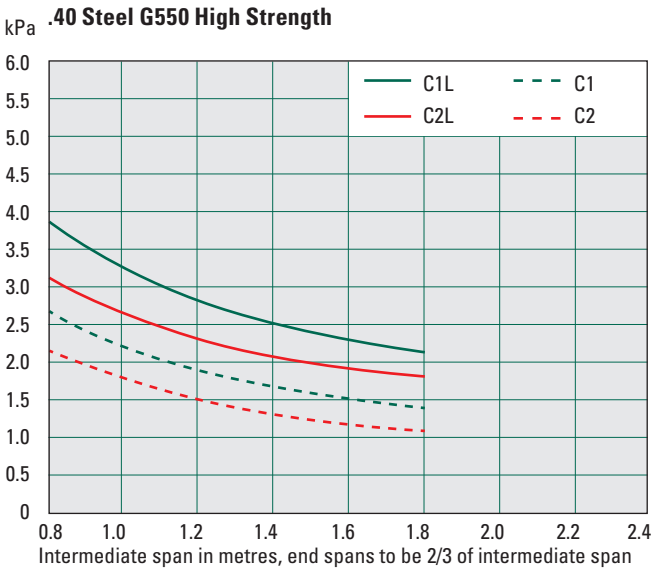

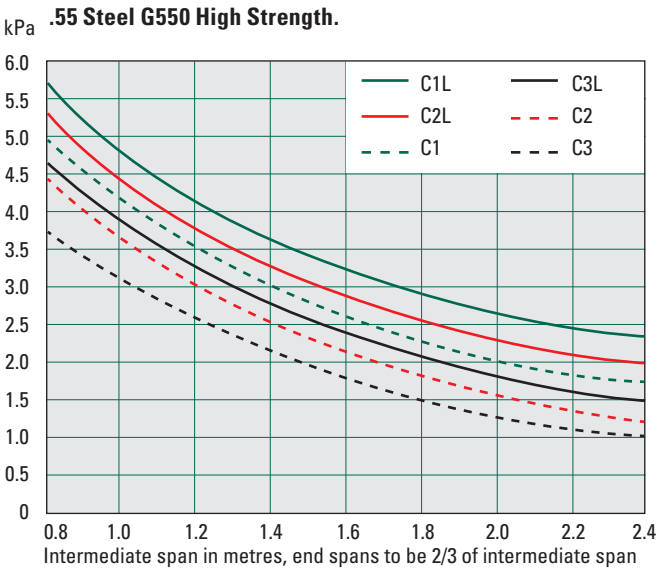

C1L, C2L, C1, C3L,C2 and C3 represent alternative primary fixing methods
Testing confirms that .70mm Aluminium has similar results to .40mm Steel and that .90mm Aluminium has similar results to .55mm Steel and is adjusted for practical application. Aluminium requires load spreading washers and EPDM washers at all times.
For compliance with NZ Metal Roof and Wall Cladding Code of Practice.

Primary Fixing Methods*

Roofing Application

C1L Fix side laps and every 2nd crest with approved screws and load spreading profiled metal washers and EPDM washers.

C2L Fix side laps and miss 1, hit 1, miss 2, hit 1, miss 1, hit 1, miss 2 etc with approved screws and load spreading profiled metal washers and EPDM washers. End purlins and periphery of roof to be fixed every 2nd crest.

C1 Fix side laps and every 2nd crest with approved fasteners alone.

C3L Fix side laps and miss 2, hit 1, miss 3, hit 1,miss 2 etc with approved screws and load spreading profile metal washers and EPDM washers. End purlins and periphery of roof to be fixed every 2nd crest.

C2 Fix side laps and miss 1, hit 1, miss 2, hit 1, miss 1, hit 1, miss 2 etc with approved fasteners alone. End purlins and periphery of roof to be fixed every 2nd crest.

C3 Fix side laps and miss 2, hit 1, miss 3, hit 1, miss 2 etc with approved fasteners alone. End purlins and periphery of roof to be fixed every 2nd crest.

* Note - Compliance with E2/AS1 is dependent on purlin spacing and gauge of roofing. See section on Purlin/Girt Spacing Limitations and Recommendations.

Drape Curved Roofing

The first two purlins at each end of the sheet in drape curving situations should, in all cases, be fixed using profile metal washers and EPDM washers with the balance of the roof fixed as above.

Primary Fixing Methods**

Wall Cladding Application

Fix in the pan adjacent to every side lap over rib and every 2nd pan, and at all external and internal corners.
(No metal washer required)

Wall Cladding Wind Load Span

Pan fixed wall cladding can be assumed to have a wind load design at least equivalent to C1L from the above graphs.

** Note - Compliance with E2/AS1 is dependent on girt spacing and gauge of cladding. See section on Purlin/Girt Spacing Limitations and Recommendations.

To be read in conjunction with Roof Expansion Provisions

PURLIN/GIRT SPACING LIMITATIONS AND RECOMMENDATIONS

Dimensions in metres

Section 1. **For compliance with E2/AS1**		**Fixing Patterns** (Refer to section on Primary Fixing Methods) **Steel Based Material**						**Aluminium H36**	
		.40mm BMT			.55mm BMT			.70mm BMT	.90mm BMT
End Span	**Intermediate Span**	**Windzone** Low & Med	High & Very High	Extra High	**Windzone** Low & Med	High & Very High	Extra High		
0.4	0.6	C2	C2	C2	C3	C3	C3	Refer to manufacturers recommendation.	
0.6	0.9	C2	C2	C1	C3	C3	C3		
0.8	1.2	C2	C1	C1	C3	C3	C3		
1.15	1.6	N/A	N/A	N/A	C3	C3	C2		

N/A - Not applicable

Section 2.

Manufacturers recommendation in accordance with NZ Metal Roof and Wall Cladding Code of Practice (When compliance with E2/AS1 not required)

		Steel Based Material		**Aluminium H36**	
		.40mm BMT	.55mm BMT	.70mm BMT	.90mm BMT
Restricted Access Roof (Type 2B) (Where walking is permitted within 300mm of the purlin line or over 2 crests)	Intermediate End	1.200 0.800	1.600 1.100	0.800 0.550	1.200 0.800
Unrestricted Access Roof (Type 2A) (Where walking is permitted anywhere on the roof cladding)	Intermediate End	N/R* N/R*	1.200 0.800	N/R* N/R*	0.900 0.600
Non Accessible Roof and Wall Cladding (Type 3)	Intermediate End	1.600 1.100	2.400 1.600	1.500 1.000	2.100 1.400
Maximum Recommended Purlin Spacing for standard roof (See notes below)	Intermediate End	0.900 0.600	1.500 1.000	0.800 0.550	1.200 0.800
Wind Design Load using fixing method C2 (minimum) as an example at these purlin spacings from the Wind Load Span Design Graphs	Intermediate End	1.9kPa 2.5kPa	2.3kPa 3.6kPa	1.9kPa 2.5kPa	2.3kPa 3.6kPa

* Not recommended

Classification Types are from the NZ Metal Roof and Wall Cladding Code of Practice.
For other than compliance with E2/AS1 purlin spacing limitations to be read in conjunction with Wind Load Span Design Graphs.
In areas of heavy traffic purlin spacing should be reduced accordingly.
For curved roofing refer to Information Table.
When self supporting paper is preferred to be used (without any support) purlin spacings must be limited to a maximum of 1.200 mtr centres for vertically run underlay and 1.150 mtr centres for horizontally run underlay. This is particularly relevant with aluminium and /or severe marine environments for the reasons designated under Building Design/Performance/Product Selection part of this document.

Snow Loads

When the possibility of snow exists it is necessary to allow for the extra imposed snow loads by increasing the strength of the structure, and/or minimising the build up of snow, and this is generally achieved by increasing the roof pitch by allowing easier shedding of the snow or otherwise as the designer determines.

The objective is to simplify rather complex loading patterns while remaining adequately cautious. The design loads should take account of drifting snow due to wind,but wind loads are not required to be combined with snow loads.

As snow loads are uniformly distributed loads they are similar to wind loads.

Snow loadings are not required to be taken into account for the North Island of New Zealand north of a line drawn from Opotiki to Turangi and New Plymouth.

However for other areas snow loadings may need to be taken into account dependent on the area and altitude of the proposed project. A fuller reference including a map and chart is available from the NZ Metal Roofing Roof and Wall Cladding Code of Practice Section 3.5.

PRIMARY FIXING CHART

Roofing - Crest fixed (To be read in conjunction with Roof Expansion Provisions and Load Span Design Graphs)

	Wood Purlins	Steel Purlins or girts up to 1.5mm	Steel Purlins or girts 1.5-4.5mm	Steel Purlins or girts 4.5-12mm	Washers (When required)
Steel Based Material	12-11x50 Class 4 Type 17 Woodteks or Roofzips with neos or 60mm weatherseal nails	12-14x45 Class 4 Steelteks with neos or 12x50 Roofzips with neos	12-14x45 Class 4 Steelteks with neos	12-24x 50 Class 4 Series 500 Steelteks with neos	Corrugated load spreading profile Metal and 30mm EPDM
Aluminium Based Material	14-11x55 Alutite with bonded washer with Corrugate load spreading profile Ali washer & 30mm EPDM	Stainless steel grade 304, 14-14x70 Steelteks and bonded washers through a 10mm dia. clearance hole with Corrugate load spreading profile Ali washer & 30mm EPDM	Stainless steel grade 304, 14-14x70 Steelteks and bonded washer through a 10mm dia. clearance hole with Corrugate load spreading profile Ali washer & 30mm EPDM	Fabco stainless steel grade 304, 14-14x70 Type B screw and bonded washer through a 10mm dia clearance hole with Corrugate load spreading profile Ali washer and 30mm EPDM	Corrugate load spreading profile Ali and 30mm EPDM

Wall Cladding - Pan fixed

	Wood Purlins	Steel Purlins or girts up to 1.5mm	Steel Purlins or girts 1.5-4.5mm	Steel Purlins or girts 4.5-12mm	Washers (When required)
Steel Based Material Direct fixed	12-11x40 Class 4 Type 17 Woodteks with neos	12-14x20 Class 4 Steelteks with neos	12-14x20 Class 4 Steelteks with neos	12-24x32 Class 4 Steelteks Series 500 with neos	
Steel Based Material 20mm Cavity	12-11x50 Class 4 Type 17 Woodteks or Roofzips with neos	12-14x45 Class 4 Steelteks with neos or 12x50 Roofzips with neos	12-14x45 Class 4 Steelteks with neos	12-24x50 Class 4 Steelteks Series 500 with neos	
Aluminium Based Material Direct Fixed	12-11x35 Alutite with bonded washer	Stainless steel grade 304, 14-14x25 Steelteks and bonded washer through a 10mm diameter clearance hole with 19mm bonded Ali washer	Stainless steel grade 304, 14-14x25 Steelteks and bonded washer through a 10mm diameter clearance hole with 19mm bonded Ali washer	Fabco stainless steel grade 304, 14-14x20 Type B screw and bonded washer through a 10mm diameter clearance hole with 19mm bonded Ali washer	19mm bonded Ali washer
Aluminium Based Material 20mm Cavity	12-14x55 Alutite with bonded washer	Stainless steel grade 304, 14-14x70 Steelteks and bonded washer through a 10mm diameter clearance hole with 19mm bonded Ali washer	Stainless steel grade 304, 14-14x70 Steelteks and bonded washer through a 10mm diameter clearance hole with 19mm bonded Ali washer	Fabco stainless steel grade 304, 14-14x70 Type B screw and bonded washer through a 10mm diameter clearance hole with 19mm bonded Ali washer	19mm bonded Ali washer

Note: All primary fasteners to have a minimum embedment into structural timber of 30mm. Adjust fastener length for both timber and steel fixings when necessary for battens etc. When using load spreading profile washers for roofing fix ridging, roof flashings etc. using a 25mm Aluminium embossed washer and appropriate screw.

Secondary Fasteners (To be used in accordance with the NZ Metal Roof and Wall Cladding Code of Practice.)

These should be:

- Aluminium Blind Rivets AS5-3 x 4mm minimum (Residential)
- Aluminium Blind Rivets AS 6-3 x 4.8mm minimum (Commercial)
- Aluminium Bulb-tite Rivets
- 12-11x35 Alutites
- 12-11x25 Class 4 Type 17 Woodteks (Steel based material only)

ROOF EXPANSION PROVISIONS

Fix with recommended fasteners and systems from the Primary Fixing Chart and additionally allow for the following where applicable.

Steel Based Material				
E2/AS1 Compliance				
Sheet Lengths	**Up to 8 metres**	**>8-12 metres**	**>12-18 metres**	**>18 metres**
	No special provision	Lower 50 % of the roof should be fixed using oversize holes at fastening points with approved load spreading profile washer, and 30mm EPDM washers		Not Applicable
NZ Metal Roof and Wall Cladding Code of Practice Compliance				
Sheet Lengths	**Up to 15 metres**	**>15-18 metres**	**>18-24 metres**	**>24-30 metres**
Zincalume and light colours in Favourable Installations (Refer NZMRM C.O.P. Section 4.1.6)	No special provision	No special provision except screws are recommended	No special provision except screws are recommended	Solid fix using screws from the ridge down 24 metres and oversize holes should be used for the remainder of the sheet with approved load spreading profile washers, and 30mm EPDM washers
Dark Colours in Favourable Installations (Refer NZMRM C.O.P. Section 4.1.6)	No special provision	No special provision except screws are recommended	Solid fix using screws from the ridge down 18 metres and oversize holes should be used for the remainder of the sheet with approved load spreading profile washers, and 30mm EPDM washers	Not recommended*
Zincalume and light colours in Unfavourable Installations (Refer NZMRM C.O.P. Section 4.1.6)	No special provision	No special provision except screws are recommended	Solid fix using screws from the ridge down 18 metres and oversize holes should be used for the remainder of the sheet with approved load spreading profile washers, and 30mm EPDM washers. *Maximum recommended sheet length is 25 metres	
Dark Colours in Unfavourable Installations (Refer NZMRM C.O.P. Section 4.1.6)	No special provision	Solid fix using screws from the ridge down 15 metres and oversize holes should be used for the remainder of the sheet with approved load spreading profile washers, and 30mm EPDM washers.		* Not recommended over 25 metres

For sheet lengths in excess of the above a step joint or other special provision for expansion is required. Refer to Roofing Industries.
When using load spreading profile washers for roofing fix ridging, roof flashings etc. using a 25mm Aluminium embossed washer and appropriate screw.
Oversize holes should be 3mm greater diameter than the screw or as per the Primary Fixing Chart for stainless steel screws.
For further information on the fixing of Corrugated refer to E2/AS1 of the NZ Building Code and NZ Metal Roof and Wall Cladding Code of Practice, www.metalroofing.org.nz
These publications along with the foregoing technical data should form the basis of the design and installation of metal roofing and cladding
Also refer to our suite of detail drawings, and to NZ Steel Ltd and Pacific Coilcoaters literature.

ROOF EXPANSION PROVISIONS

Fix with recommended fasteners and systems from the Primary Fixing Chart and additionally allow for the following where applicable.

<table>
<tr><td colspan="4">Aluminium</td><td></td></tr>
<tr><td>Sheet Lengths</td><td>Up to 10 metres</td><td>10-12 metres</td><td>12-15 metres</td><td>>15 metres</td></tr>
<tr><td colspan="4"></td><td></td></tr>
<tr><td>Plain Aluminium & lighter colours in Favourable Installations
(Refer NZMRM C.O.P. Section 4.1.6)</td><td colspan="3">Fix using oversize holes with screws and approved load spreading profile Ali washers, and 30mm EPDM washers</td><td>Not recommended</td></tr>
<tr><td>Dark Coloured Aluminium in Favourable Installations
(Refer NZMRM C.O.P. Section 4.1.6)</td><td colspan="2">Fix using oversize holes with screws and approved load spreading profile Ali washers, and 30mm EPDM washers</td><td colspan="2">Not recommended</td></tr>
<tr><td>Plain Aluminium & lighter colours in Unfavourable Installations
(Refer NZMRM C.O.P. Section 4.1.6)</td><td colspan="2">Fix using oversize holes with screws and approved load spreading profile Ali washers, and 30mm EPDM washers</td><td colspan="2">Not recommended</td></tr>
<tr><td>Dark Coloured Aluminium in Unfavourable Installations
(Refer NZMRM C.O.P. Section 4.1.6)</td><td>Fix using oversize holes with screws and approved load spreading profile Ali washers, and 30mm EPDM washers.</td><td colspan="3">Not recommended</td></tr>
</table>

For sheet lengths in excess of the above a step joint or other special provision for expansion is required. Refer to Roofing Industries.
When using load spreading profile washers for roofing fix ridging, roof flashings etc. using a 25mm Aluminium embossed washer and appropriate screw.
Oversize holes should be 3mm greater diameter than the screw or as per the Primary Fixing Chart for stainless steel screws.
For further information on the fixing of Corrugated refer to E2/AS1 of the NZ Building Code and NZ Metal Roof and Wall Cladding Code of Practice, www.metalroofing.org.nz
These publications along with the foregoing technical data should form the basis of the design and installation of metal roofing and cladding
Also refer to our suite of detail drawings, and to NZ Steel Ltd and Pacific Coilcoaters literature.

Thermakraft™



Thermakraft
ONE WRAP SYSTEM
10 Products - One system
One warranty

Installation Guide

WATERGATE PLUS

New Zealand's premium all-purpose, fire retardant wall wrap.

Watergate Plus is specifically designed as a wall underlay for use behind exterior wall cladding. Made from synthetic materials Watergate Plus is fire retardant, water resistant and vapour permeable. The water vapour transfer rate of the product has been optimised to minimise condensation risk in homes without compromising its primary water barrier properties.

Watergate Plus is part of the Thermakraft One Wrap System. Its unique construction allows for easier installation while maintaining best in class performance qualities.

Smarter products. Better buildings.
thermakraft.co.nz

CodeMark BRANZ-CM-1002

BRANZ Appraised
Appraisal No.695 [2017]

Installation Guide

Application Method

- Fix Watergate Plus underlay with printed side facing the exterior and run horizontally.
- Fix to all exterior walls from below bearers to the top plate. Watergate Plus underlay is available in widths of 2740mm and 1370mm. The 2740mm width product is generally wide enough to cover from below the bottom plate to the top plate.
- **Timber Framing:** Pull the Watergate Plus underlay tight and fix securely to the frame with fasteners such as galvanized Little Grippers, 6mm-8mm staples or 20mm large head galvanized clouts at 300mm centres horizontally and vertically.
- **Steel Framing:** Ensure frame is free from oil, dust and dirt. Fix securely using construction grade double-sided tape or adhesive or galvanized flat head screws that are appropriate for external framing and roofing use, at 300mm centres.

  Note: Check adhesive compatibility with Watergate Plus and the steel framing materials before use.

  If using a tape: Apply double-sided tape onto steel frame studs and only peel off the forward-facing liner once Watergate Plus is ready to be installed. When ready, peel off approximately 2m of tape liner at a time and press Watergate Plus firmly onto tape, ensuring it is taut.

  Note: The double-sided tape is to temporarily hold the Watergate Plus in place until the batten and/or cladding is installed. The screws used to fix these are the permanent fixings for Watergate Plus.
- Minimum of 150mm lap is required at joins. All vertical laps must be made over studs. Horizontal laps to be laid ship lap style allowing water to be shed to the outer face of Watergate Plus.
- Cover all windows and door openings with Watergate Plus underlay. It is recommended that the Watergate Plus underlay is not cut and prepared for window installation until the arrival of the windows.
- When windows and doors are ready for installation, the Watergate Plus underlay covering the openings should be cut at 45° and folded into the opening and securely fastened. Thermakraft window flashing tapes are recommended as the window flashing system.

  Note: In accordance with NZBC Acceptable Solution E2/AS1 and NASH Building Envelope Solutions: 2019 (E2/AS4), wall underlay must be prevented from bulging into the drained cavity. Where stud spacing is greater than 450mm, Thermakraft stud strap or Thermastrap run horizontally at 300 centres is an acceptable means of prevention.
- Once installed, Watergate Plus must not be left exposed to the weather or UV for a maximum of 90 days. Watergate Plus underlays will provide temporary weather protection during construction allowing work to continue. Internal linings and insulation must not be installed until the exterior cladding is completed.
- Fastenings behind Brick Veneer Cladding must have an equivalent service life to that of Brick Veneer (50 years). Refer to NZBC B2 Durability.
- Repair small damaged areas with any Thermakraft window flashing tape or Thermakraft Premium Joining Tape. Any large areas which require repair may be covered with a second layer of underlay with a lap of 150mm and then taping.
- Watergate Plus underlay must be installed by, or under the guidance of a licensed building practitioner.



Fix Watergate Plus securely to the frame.



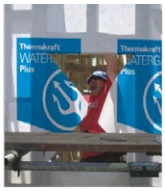

On arrival of doors and windows, cut Watergate at each opening on a 45° angle away from each corner. Pull the Watergate flaps inside and fasten to the inside of frame.

Application Tips

Watergate Plus is unaffected by LOSP or other solvent based treated timber. However, LOSP or other solvent based treated timber must have sufficient time for the solvent to flash off in a well-ventilated area. Recommended minimum 7 days.

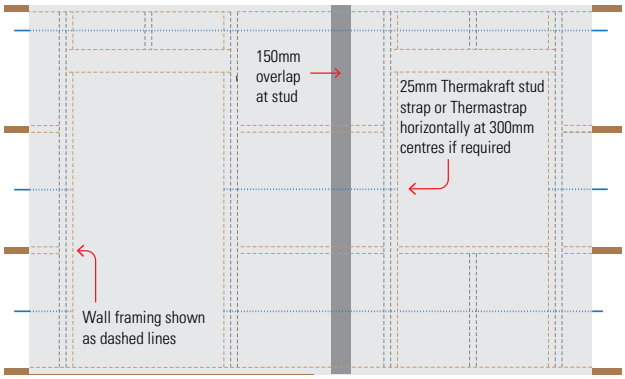

Handling and Storage

Watergate Plus underlay must be handled with care to prevent damage such as tearing and roll deformation. Due to the width of the product, care should be taken when installing in windy conditions.

The product must be stored under cover well away from direct moisture, rainfall contact and sunlight (UV). Care should be taken not stack other materials on top of the product.

The recommendations contained in Thermakraft's literature are based on good building practice, but are not an exhaustive statement of all relevant information and are subject to any conditions contained in the Warranty. All product dimensions and performance claims are subject to any variation caused by normal manufacturing process and tolerances. Furthermore, as the successful performance of the relevant system depends on numerous factors outside the control of Thermakraft (for example quality of workmanship and design), Thermakraft shall not be liable for the recommendations in that literature and the performance of the Product, including its suitability for any purpose or ability to satisfy the relevant provisions of the Building Code, regulations and standards. Literature subject to change without notification. Latest documentation can be found on the website. E&OE.

Issue 4, September 2021

Note: 25 MPa Concrete
All ground under the slab shall be free from unsuitable fill.
Builder to remove any unsuitable fill and compact GAP40 to required level.

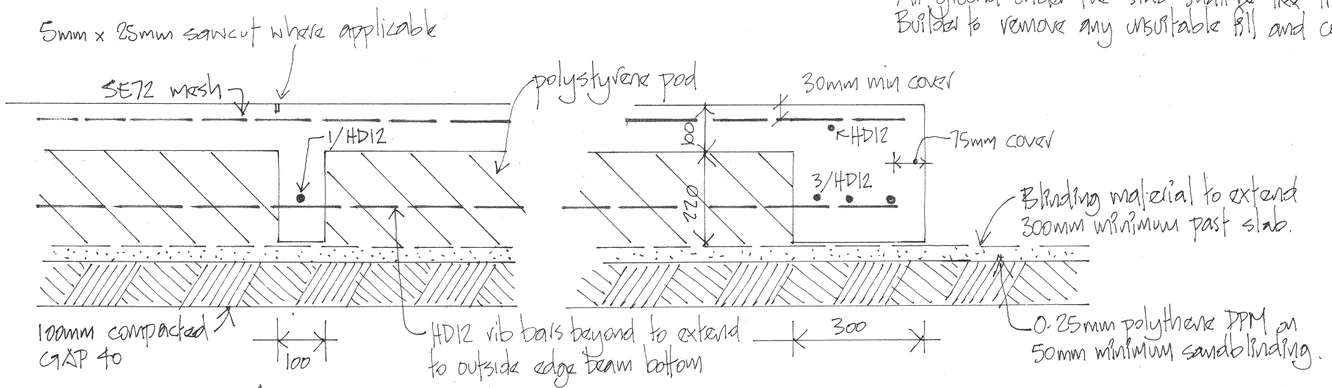

INTERNAL BEAM DETAIL

EXTERNAL BEAM DETAIL

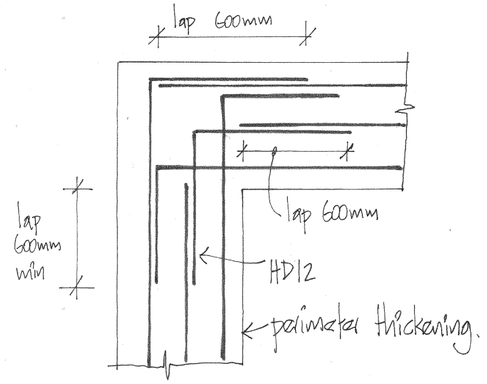

CORNER PLAN DETAIL
EDGE BEAM

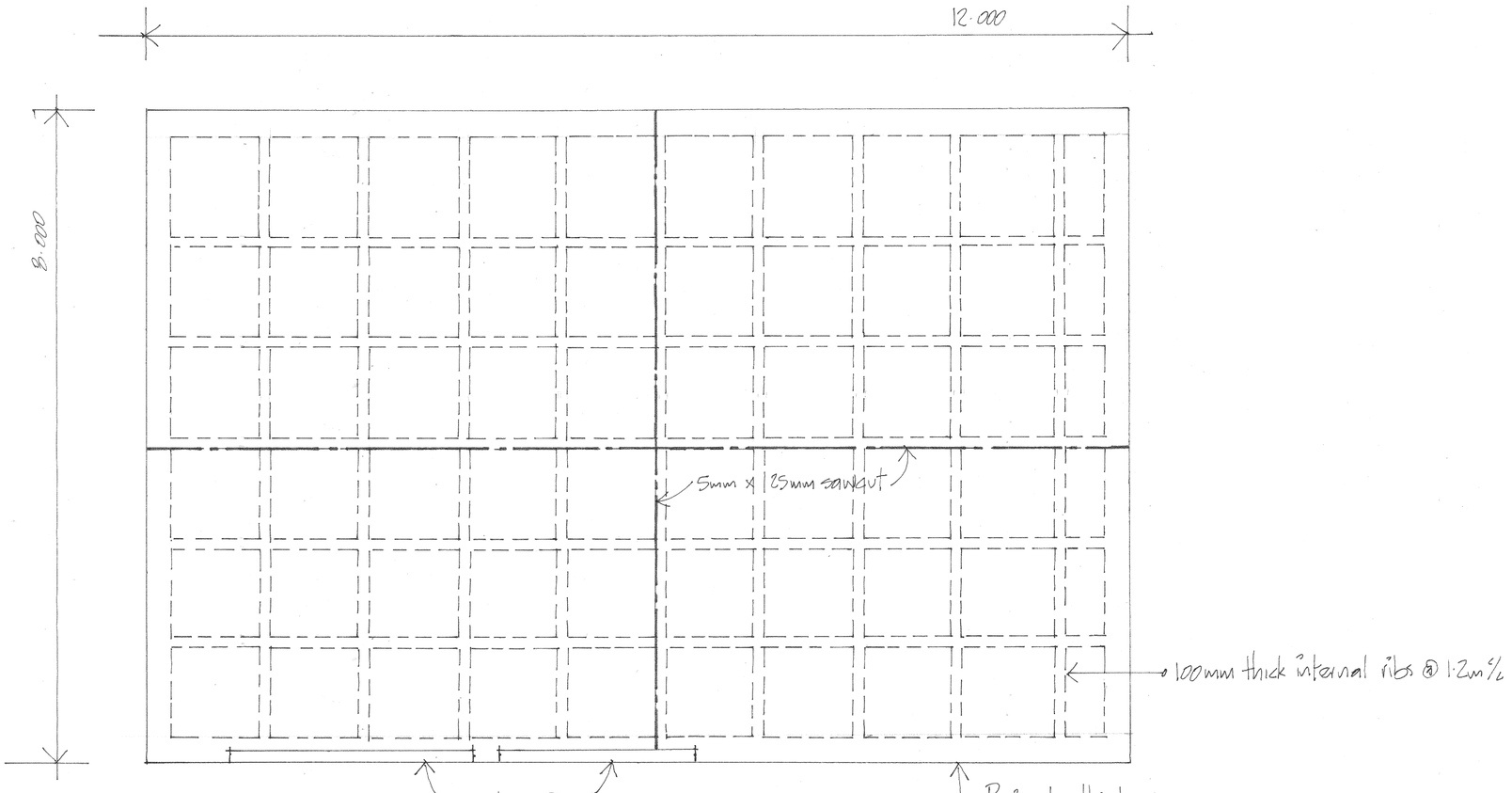

Note:
* No internal loadbearing thickenings required as trussed roof transfers loads to outside walls.
* Wiley Geotechnical to inspect excavation prior to placement of fill or foundation elements.
  Contact: Matt Wiley Mob: 021 0399 385
* Structural Engineer to inspect reinforcing steel prior to concrete placement.
  Contact: Pro Consult ph. 09 973 5781.

ENSURE YOU CHECK COUNCIL DOCUMENTATION OR WITH COUNCIL INSPECTOR REGARDING ANY REQUIREMENT FOR A STRUCTURAL PS4.

IF A STRUCTURAL PS4 IS REQUIRED PLEASE ADVISE PROCONSULT ONE TO TWO DAYS PRIOR TO A NOTIFIABLE INSPECTION.

FAILURE TO HAVE THE STRUCTURAL ENGINEER ON SITE FOR A NOTIFIABLE INSPECTION WILL RESULT IN NO PS4 DURING CCC. THE ENGINEER MUST SIGHT NOTIFIABLE STRUCTURAL ISSUES IN ORDER TO CERTIFY THEM.

CHECKED
B1 NZBC by
Stewart Hobbs
BE, MBA, CPEng

Rev	Date	Issue
A	9/21	Bldg Application

Habitat Design Ltd
Architectural Designers
PO Box 25 715
St Heliers, Auckland
021 2519309
Email: russellswain@habitatdesign.co.nz

Client
GINA UTTING

Project
PROPOSED NEW GARAGE/SLEEPOUT
752 SETTLEMENT ROAD
KAIWAKA
AUCKLAND

Drwg
FOUNDATION PLAN

Scale	Sheet No
1:50 1:10	5
Date	Issue
SEPT'21	A

shadowclad®

SHADOWCLAD® STRUCTURAL Natural GROOVE

SHADOWCLAD® STRUCTURAL Natural TEXTURE

SHADOWCLAD® STRUCTURAL Ultra GROOVE

SHADOWCLAD® STRUCTURAL Ultra TEXTURE

SHADOWCLAD® FLASHINGS

SHADOWCLAD® SPECIFICATION & INSTALLATION GUIDE

FOR CAVITY CONSTRUCTION

MARCH 2021



CHH PLY

Information contained within is specific to Shadowclad® structural plywood products and must not be used with any other plywood products, no matter how similar they may appear.

shadowclad®

CAVITY CONSTRUCTION

Contents

1.0 Shadowclad® Product Range ... 3
1.1 Technical Information & CAD Details ... 4
1.2 Product Description & Range ... 4
1.3 Building Materials for Use with Shadowclad (Exterior Cladding) ... 10
1.4 Preservative Treatment ... 10
1.5 Sustainability ... 11
1.6 Product Identification ... 11
2.0 Design Considerations ... 11
2.1 Design Responsibility ... 11
2.2 Literature Scope ... 11
2.3 Code Compliance ... 11
2.4 Site & Foundations ... 11
2.5 Ground Clearances ... 12
2.6 Moisture Management ... 12
2.7 Wind Loading ... 12
2.8 Durability ... 12
2.9 Textured vs. Smooth Finished Plywood as Exterior Cladding ... 12
2.10 Health & Safety ... 13
2.11 Storage & Handling ... 13
3.0 Interior Linings ... 13
4.0 Installation – Exterior Cladding ... 14
4.1 Framing – Durability ... 14
4.2 Framing – Construction ... 14
4.3 Preparation – Building Underlay & Rigid Air Barrier ... 14
4.4 Preparation – Cavity Construction ... 14
4.5 Sheet Layout ... 17
4.6 Fixings – Fastener Durability ... 17
4.7 Fixings – Fastener Size & Layout ... 17
4.8 Installation Tools for Shadowclad ... 18
4.9 Shadowclad Key Installation & Design Points ... 19
4.10 Vertical Sheet Joints ... 20
4.11 Horizontal Sheet Joints ... 23
4.12 External Corners ... 25
4.13 Internal Corners ... 26
4.14 Shadowclad Flashing Junction Points ... 27
4.15 Window Penetrations ... 29
4.16 Wall Penetrations ... 32
4.17 Sheet Clearances ... 36
4.18 Other Details ... 39
5.0 Coating & Application – Exterior Cladding ... 45
5.1 Surface Preparation ... 45
5.2 Coating Application ... 45
5.3 Coating Selection ... 45
5.4 Coating Requirements if Run off is Used for Drinking Water ... 46
6.0 Maintenance ... 47
7.0 Frequently Asked Questions ... 48
8.0 Glossary of Terms ... 48
9.0 References & Sources of Information ... 49
10.0 Limitations ... 49
11.0 Shadowclad Stick User Guide ... 50



CHH PLY



1.0 SHADOWCLAD® PRODUCT RANGE

Manufactured in New Zealand by Carter Holt Harvey Plywood (CHH Ply), Shadowclad® panels are suitable for use as an exterior wall cladding when using H3 treated panels or as an internal wall or ceiling lining when using untreated panels.

Shadowclad is manufactured under a third party audited quality control programme to monitor compliance with AS/NZS 2269 Plywood Structural. All Shadowclad products carry Engineered Wood Products Association of Australasia (EWPAA) Joint Accreditation System – Australia and New Zealand (EWPAA/JAS-ANZ) certification.

Shadowclad has been BRANZ appraised as a cladding material for cavity wall construction. To view the BRANZ Appraisal No. 764 (2017) visit www.shadowclad.co.nz.

For specific information regarding the use of Shadowclad with weatherboard, solid plaster or brick vertical junctions refer to the Shadowclad Specification and Installation Guide for mixed cladding systems on cavity construction.

Our other plywood products:

- For specific information on plywood as a rigid air barrier, and/or bracing, refer to the current Ecoply® Barrier Specification and Installation Guide.
- For information relating to Ecoply structural plywood and applications other than exterior cladding, refer to the current Ecoply Specification and Installation Guide.

These are all available for download from www.chhply.co.nz.

The Shadowclad for cavity construction BRANZ Appraisal No. 764 (2017) does not cover:

- Shadowclad used as an interior lining.
- Handiply® Utilityclad™ plywood products.
- Shadowclad in direct fix cladding applications.

Shadowclad products must be competently installed in accordance with good building practices and sound design principles to satisfy the requirements of the Building Act 2004, the New Zealand Building Code (NZBC), and applicable New Zealand Standards. This is the responsibility of building owners and the design professionals and builders that they engage. This Shadowclad Specification and installation guide for cavity construction contains information, limitations, and cautions regarding the properties, handling, installation, usage, and the maintenance of Shadowclad products. However, to the maximum extent permitted by law, CHH Ply assumes no legal liability to you in relation to this information.

The information contained in this document is current as at March 2021. It is your responsibility to ensure you have the most up to date information available.

The information contained in this publication relates specifically to Shadowclad structural plywood products manufactured by CHH Ply and must not be used with any other plywood manufacturer's products no matter how similar they may appear.

Alternative plywood products can differ in a number of ways which may not be immediately obvious and substituting them for Shadowclad structural plywood products is not appropriate, and could in extreme cases lead to premature failure and/or buildings which do not meet the requirements of the NZBC.

1.1 TECHNICAL INFORMATION & CAD DETAILS

When specifying or installing any Shadowclad product visit www.shadowclad.co.nz or call 0800 326 759 to ensure you have current specification material and any relevant technical notes.

For buildings containing mixed cladding solutions with Shadowclad refer Shadowclad Specification and Installation Guide for mixed cladding systems on cavity construction.

Having trouble installing Shadowclad? Visit www.shadowclad.co.nz or download the Shadowclad APP to view the installation animations of common Shadowclad junctions.

1.2 PRODUCT DESCRIPTION & RANGE

Shadowclad structural plywood panels are manufactured from radiata pine wood veneers. The veneers are placed at right angles to each other for maximum strength and stability then bonded together with synthetic phenolic (PF) resin to form a strong and permanent Type A bond.

Shadowclad is available in panel sizes 2440/2745 x 1216mm (to provide 1200mm cover) and features a unique textured (bandsawn) appearance which also helps to diffuse UV rays for increased aesthetic performance when exposed to weather.

Shadowclad is available as a Textured or Grooved profile and in either Natural or Ultra finishes. The Selection, application and maintenance of coatings is the responsibility of the building owners and the professionals that they engage. For advice on specific coating systems and their suitability for use with Shadowclad Natural or Shadowclad Ultra, always refer to the coating manufacturer.

Shadowclad Natural

Shadowclad Natural is an uncoated panel suitable for use with penetrating stains, film forming stains and paint systems. If Shadowclad is left uncoated or is clear coated in exterior applications the long term aesthetics of the board will be significantly reduced. While the product will meet NZBC Clauses B2 and E2 durability and weather tightness requirements for cladding, a high visual appearance will not be achieved in the long term.

Shadowclad Ultra

Shadowclad Ultra features a factory applied exterior grade performance coating suitable for use with most paint and film forming stain systems. Using a unique powder coating process on the panel face and edges means Ultra panels can be immediately top coated on site, eliminating (in most cases) the need for expensive and time consuming wet primers.

CHH Ply recommends the use of Shadowclad Ultra where suitable paint or film forming stains are being used.

Shadowclad Ultra features:

- High 60-80 microns film build, can be up to 2-3 times thicker than traditional wet primers.
- Continuous powder coated surface forms an effective moisture barrier for a drier more consistent painting surface.
- Saves time and money as traditional wet primers are not normally required.
- Panel surface, edges and bottom 150mm of sheet factory coated for increased panel durability.
- Once installed Shadowclad Ultra can be exposed to weather for up to 3 months prior to application of finishing coats.
- Low volatile organic compound (VOC) primer coating.

Shadowclad Ultra is available H3 treated for use as an exterior cladding. It is available H3.1 LOSP treated for residential and commercial applications or H3.2 CCA if required. H3.2 CCA treatment is only available in the Ultra finish and is not available with Natural finish products.

Shadowclad Ultra is not suitable for use with penetrating stains.

Table 1: Surface Finishes

Natural		**Ultra**	
Texture	Groove	Texture	Groove
			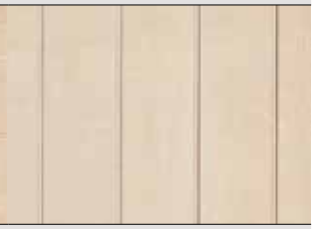
Shadowclad Natural is an uncoated panel suitable for staining and painting. Untreated panels can be clear coated for internal, dry applications.		Shadowclad Ultra features a performance coated surface ready for top coating saving time and money when using paints and film forming stains. It is suitable for use in exterior applications only.	

Table 2: Shadowclad Product Range

	Texture	Groove
Finish	Natural or Ultra	Natural or Ultra
Sheet Length	2440 and 2745mm	2440 and 2745mm
Width (Overall)	1216mm	1216mm
Width (Effective)	1200mm	1200mm
Cover/Width Tolerance	+/– 1mm	+/– 1mm
Nominal Thickness	12mm	12mm
Weight (kg/m²)	6.6	6.6
R-value (m².C/W)	0.104	0.104
Groove Profile	N/A	9mm wide, 5mm deep at 150mm centres
Edge Profile	Ship lap with weather groove	Ship lap with weather groove
Treatment Available	• H3.1 LOSP (Azole) • H3.2 CCA (Ultra finish only) • Untreated – internal dry applications (Natural finish only)	• H3.1 LOSP (Azole) • H3.2 CCA (Ultra finish only) • Untreated – internal dry applications (Natural finish only)

Shadowclad Exterior Flashing Range

Manufactured from extruded aluminium or folded from 0.5mm thick G304 stainless steel, the Shadowclad flashings range is purpose designed to complement Shadowclad panels used in exterior applications.

Independently tested for weathertightness and compliant with Table 20 of E2/AS1, Shadowclad flashings achieve 50 year durability in all NZS 3604 exposure zones including zone D (sea spray).

Note: Stainless steel fasteners should not have contact with or pierce aluminium flashings. Where stainless steel fasteners are to pierce flashings stainless steel flashings should be used.

The range includes internal and external angles, Horizontal and inter-storey 'Z' flashings and a cavity base closure.

Aluminium horizontally installed flashings come in 3600mm lengths and vertically installed angles are available in 3000mm and 6000mm lengths - refer Table 4. Stainless Steel flashings are available in 3000mm lengths - refer Table 5.

The information, details and performance statements provided in this guide are based on Shadowclad plywood panels and Shadowclad flashings being used together as a system.
CHH Ply does not recommend that Shadowclad plywood panels be installed with non-CHH Ply flashings. Flashings not supplied by CHH Ply must, as a minimum, comply with E2/AS1 specifications and be compatible for use with H3.1 LOSP or H3.2 CCA treated plywood. It is the Designer's responsibility to ensure that any non-CHH Ply flashings are fit for purpose and compatible with Shadowclad products and any other building materials or components of the exterior wall.

Aluminium Flashing Finishes

Shadowclad aluminium flashings are available in either natural anodised finish (silver colour) or in mill finish for powder coating.

Exterior Flashings & H3.2 CCA Treated Shadowclad

Exposure Zone B & C

H3.2 CCA treated Shadowclad in exposure zones B and C (where flashings are exposed to weather) must use mill finished flashings which must be powder coated to the desired colour or use stainless steel flashings.

H3.2 CCA treatment contains copper. As such, some form of isolation between aluminium flashings and H3.2 CCA treated panels such as powder coating of the flashings is required. Refer to Table 21 "Compatibility of Materials in Contact" in E2/AS1 for more information.

Exposure Zone D (Sea Spray)

In exposure zone D (sea spray) flashings exposed to weather must be stainless steel for H3.2 CCA treated Shadowclad.

H3.2 CCA Treated Shadowclad

Uncoated aluminium flashings are not permitted to be in direct contact in any zone with H3.2 CCA treated Shadowclad under any circumstances.

Table 3: Flashing Durability for Shadowclad

Sheet Finish	Treatment	Exposure Zone (refer to section 4 of NZS 3604)	Flashing Material/Finish required
Shadowclad Natural/Ultra	H3.1 LOSP	Zones B and C	Aluminium Anodised, or Stainless Steel
		Zone D (Sea spray)	Stainless Steel*
Shadowclad Ultra	H3.2 CCA	Zones B and C	Stainless Steel#
		Zone D (Sea spray)	Stainless Steel

* Aluminium Powder Coated flashings may be used in Exposure Zone D where they are not pierced by Stainless Steel fasteners. Where stainless steel fasteners are to pierce flashings stainless steel flashings should be used.
# Aluminium Powder Coated flashings may be used in Exposure Zones B and C where they are not pierced by Stainless Steel fasteners. Where stainless steel fasteners are to pierce flashings stainless steel flashings should be used.

Table 4 **Aluminium** **Shadowclad Flashings Range**

Flashing	Line Drawing	Description	Finish Available	Length (mm)
Internal 90° Angle	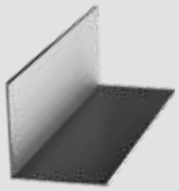	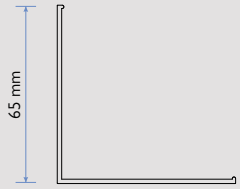	Back flashing for internal corners	Natural Anodised	3000 or 6000
Internal 'W' Angle	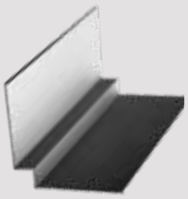	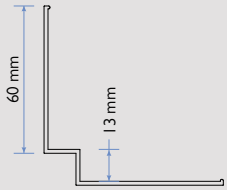	'W' back flashing for internal corners providing a flush finish with panels (13mm x 13mm)	Natural Anodised or Mill	3000 or 6000
Large Internal 'W' Angle	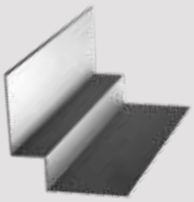	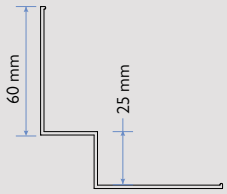	'W' back flashing for internal corners (25mm x 25mm) **Design Tip:** Use a Large 'W' where a flush junction between the Horizontal 'Z' flashing and corner flashing is desired	Natural Anodised or Mill	3000 or 6000
External Box Angle	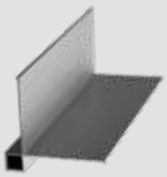	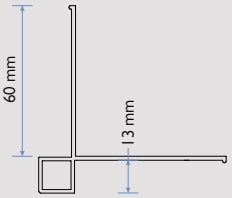	Box corner for external corners providing a flush finish with panels	Natural Anodised or Mill	3000 or 6000
Large External Box Angle	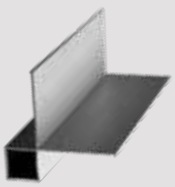	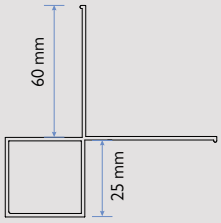	Box corner for external corners (25mm x 25mm) **Design Tip:** Use Large External Box where a flush junction between the Horizontal 'Z' flashing and corner flashing is desired	Natural Anodised or Mill	3000 or 6000
Vertical Top Hat	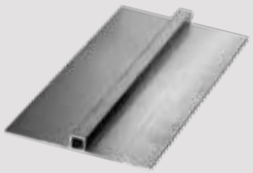	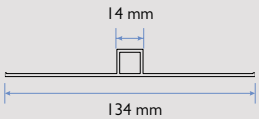	Vertical sheet joint flashing	Natural Anodised or Mill	3000 or 6000
Cavity Base Closure	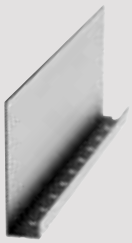	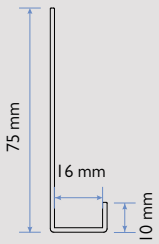	Restricts vermin from accessing the cavity space	Natural Anodised	3600

Table 4 **Aluminium** **Shadowclad Flashings Range**

Flashing	Line Drawing	Description	Finish Available	Length (mm)
Horizontal 'Z' Flashing	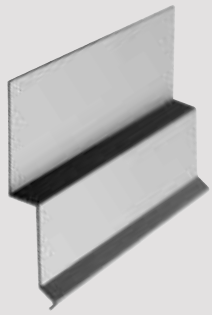	Horizontal 'Z' flashing for horizontal joints between panels	Natural Anodised or Mill	3600
Inter-Storey 'Z' Flashing	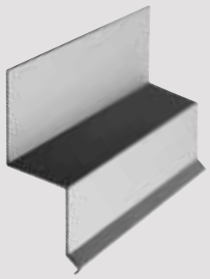	Horizontal 'Z' flashing for horizontal joints between panels when limiting continuous cavities to a height of two storeys or 7 metres	Natural Anodised or Mill	3600
Horizontal 'Z' Back Flashing		Back flashing for junction of butt jointed Horizontal 'Z' flashing	Mill	300
Inter-storey 'Z' Back Flashing	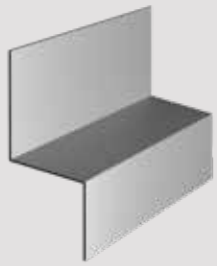	Back flashing for junction of butt joint 'Z' Flashing inter-storey	Mill	300

Table 5 **Stainless Steel** **Shadowclad Flashings Range**

Flashing	Line Drawing	Description	Finish Available	Length (mm)
Internal 90° Angle	 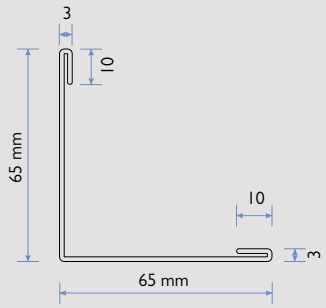	Back flashing for internal corners	Stainless Steel	3000
Large Internal 'W' Angle	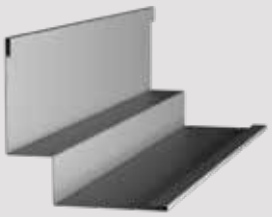 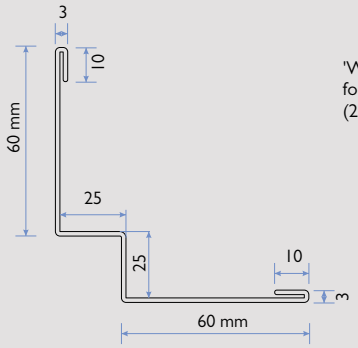	'W' back flashing for internal corners (25mm x 25mm)	Stainless Steel	3000
Large External Box Angle	 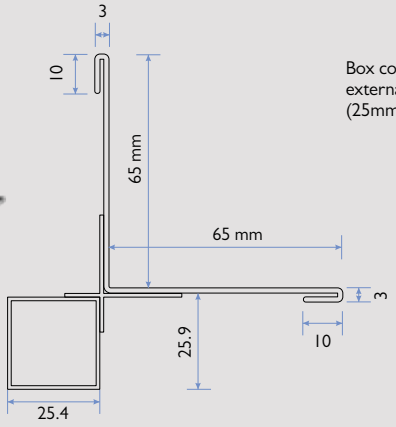	Box corner for external corners (25mm x 25mm)	Stainless Steel	3000
Cavity Base Closure	 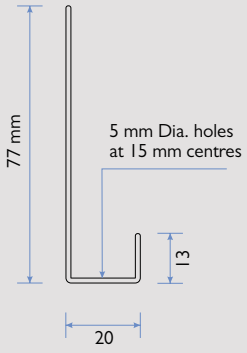	Restricts vermin from accessing the cavity space	Stainless Steel	3000

Table 5 Stainless Steel Shadowclad Flashings Range

Flashing	Line Drawing	Description	Finish Available	Length (mm)
Horizontal 'Z' Flashing	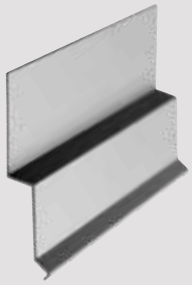 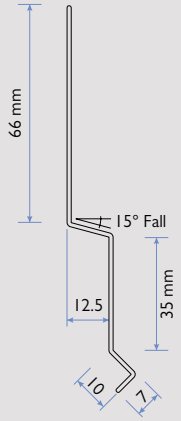	Horizontal 'Z' flashing for horizontal joints between panels	Stainless Steel	3000
Inter-Storey 'Z' Flashing	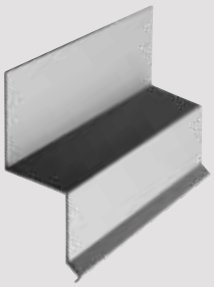 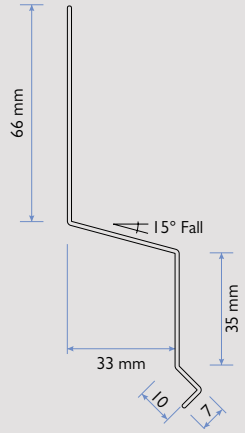	Horizontal 'Z' flashing for horizontal joints between panels when limiting continuous cavities to a height of two storeys or 7 metres	Stainless Steel	3000

1.3 BUILDING MATERIALS FOR USE WITH SHADOWCLAD (EXTERIOR CLADDING)

Table 6: Materials Available from CHH Ply

	Description	Treatment	Size/Length
Frame Flashing Tape[1]	For a secure and permanent seal of all Ecoply Barrier openings (Use in conjunction with Sill Tape)	-	150mm/200mm x 30m
Sealing Tape[1]	For a secure and permanent seal of all Ecoply Barrier vertical joints	-	60mm x 30m
Sill Tape[1]	One piece stretchable sill tape for window and door sills. 2 rolls per box	-	150mm/200mm x 20m
Ecoply® Barrier[1]	Rigid Air Barrier System	H3.2 CCA	2440mm/2745mm x 1200mm
Cavity Batten	45 x 20mm (nominal)	H3.1 LOSP	Random
Flashings	Aluminium and stainless steel flashings range	Refer Tables 4 and 5	Refer Tables 4 and 5

1. Please refer to the Ecoply Barrier Specification and Installation Guide for more information.

Building Materials Supplied by Other Manufacturers

- Fasteners (i.e. nails or screws) in accordance with Table 9: Fastener Lengths for Shadowclad fixing.
- Building underlay compliant with Table 23 of E2/AS1.
- Window/door head flashings supplied by window joinery company.
- Paint in accordance with paint manufacturer's recommendations (refer to 5.3 Coating Selection for more details).

1.4 PRESERVATIVE TREATMENT

Shadowclad is available either H3 treated for use as an exterior cladding or untreated (Natural finish products only) for interior wall and ceiling linings. H3 treated Shadowclad is treated in accordance with AS/NZS 1604.3 with the standard treatment for Shadowclad panels being H3.1 LOSP (Azole). H3.2 CCA treatment is available for Shadowclad Ultra panels if required.

Shadowclad is envelope preservative treated. Where sheets are cut, cuts must be coated with a brush on timber preservative in accordance with the relevant manufacturer's instructions. Soudal® Metalex® Concentrated Timber Preservative Clear (Soudal® Metalex® Clear) is recommended. Failure to properly apply preservative to cut edges will negatively affect the durability of the cut panels.

H3.1 LOSP Treatment

H3.1 LOSP treatment is the standard treatment for Shadowclad panels as it does not discolour the panel surface and does not use water in the treatment process allowing panels to remain at uniform dimensions.

When coating H3.1 LOSP treated plywood some residual solvent may be present on the sheet surface from the treatment process. Sheets feeling greasy to touch should be placed in a well ventilated area and allowed to flash off to ensure proper adhesion of paints and stains to the sheet surface.

Mechanical fasteners are required to fix H3.1 LOSP treated Shadowclad to framing. Do not glue Shadowclad to frames.

H3.2 CCA Treatment

H3.2 CCA uses water during the treatment process and may leave panel surfaces with a slight green colour. For this reason H3.2 CCA treatment is available only in the Shadowclad Ultra finish.

Table 7: Preservative Treatment Options

	Untreated	H3.1 LOSP (Azole)	H3.2 CCA
Preservative Carrier	N/A	Light organic oil (white spirits)	Water
Colour	Natural	Natural	Green
Fungicide	Heat treated dry wood	Propiconazole and Tebuconazole	Copper
Insecticide	Heat treated dry wood	Permethrin	Arsenate
Other Chemicals	N/A	Butyl Oxitol (co-solvent to assist active stability)	Chrome (to fix preservative in water)
Mouldicide	N/A	IPBC	Copper (limited efficiency)
Notes	Plywood for dry interior use, supplied ex mill at <15% moisture content	Solvent does not affect dimensions. Solvent smell disappears when exposed to air flow	Dried after treatment to average 18% moisture content
Applications (Refer NZS3602)	Interior dry protected	Exterior (service performance subject to detailing and coatings used)	Exterior (service performance subject to detailing and coatings used)

1.5 SUSTAINABILITY

Shadowclad is manufactured from radiata pine. It is grown on tree farms which are tended and harvested to provide wood for plywood manufacture. The crop is managed on a sustainable basis to yield millable trees. New Zealand plantations are managed in compliance with the New Zealand Forest Accord.

Shadowclad is manufactured in New Zealand at CHH Ply Tokoroa plywood mill.

Shadowclad is available Forestry Stewardship Council (FSC) (FSC-C012019) certified upon request.

1.6 PRODUCT IDENTIFICATION

In accordance with AS/NZS 2269, every sheet of Shadowclad plywood has the following information marked on the back:

- Brand name: e.g. SHADOWCLAD®.
- Intended application: e.g. STRUCTURAL.
- Glue bond: e.g.. A BOND.
- Formaldehyde emission class: e.g. E0.
- Australasian Standard: e.g. AS/NZS 2269:2012.
- Treatment Standard (if applicable) e.g. AS/NZS 1604.3:2012.
- Date and time of manufacture: e.g. 01/12/15 12:34:56.
- The Engineered Wood Products Association of Australasia (EWPAA) brand and mill number: e.g. 911 (Tokoroa mill).

Treated Example

SHADOWCLAD® STRUCTURAL A
BOND E0 AS/NZS 2269.0:2012
AS/NZS 1604.3:2012 400 64 H3 E LOSP
RETREAT CUTS PAT 01/12/15 12:23:45
911

2.0 DESIGN CONSIDERATIONS

2.1 DESIGN RESPONSIBILITY

Design responsibility lies with the building owner and the professionals that they engage. The specifier for the project must ensure that the details in the specification for their individual projects are appropriate for the intended application. The specifier must also ensure that additional detailing is provided for specific design or any areas that fall outside the scope and specifications of this literature. It is the specifier's responsibility to ensure that non-CHH Ply products are fit for purpose, and compatible with Shadowclad products.

Good detailing which avoids moisture or dust accumulation on the sheet surface can help increase durability and aesthetics. Roof overhangs contribute to performance as they offer shade and will protect walls from rain and dust. Trims should be bevelled to shed moisture and flashings should be detailed with gaps that do not trap water at the panel edges.

2.2 LITERATURE SCOPE

Shadowclad can be used for those structures which fall within the scope of Acceptable Solution E2/AS1- External Moisture. Shadowclad is recommended for a drained and ventilated cavity, where the cladding is fixed onto timber battens fixed over the timber frame and building underlay.

Shadowclad is not recommended where a risk score >20 in accordance with E2/AS1 is established.

2.3 CODE COMPLIANCE

Shadowclad on a cavity wall system is tested in accordance with E2/VM1 and AS/NZS 4284 "Testing of Building Facades" for compliance with the NZBC Clause E2 - External Moisture.

2.4 SITE & FOUNDATIONS

The site on which the building is situated must comply with the Acceptable Solution E1/AS1 of the Approved Document for the NZBC Clause E1 - Surface Water.

2.5 GROUND CLEARANCES

The bottom edge of each Shadowclad sheet must be a minimum of 50mm above decks and verandahs, 100mm above paved ground and a minimum of 175mm above unprotected ground.

Shadowclad must overhang the bottom plate on a concrete slab by a minimum of 50mm as required by NZS 3604 and E2 - External Moisture. Maximum distance from the bottom of the sheet to the fixing shall not exceed 75mm.

For garage door openings, refer Paragraph 9 "Openings to garages" in Acceptable Solution E2/AS1.

2.6 MOISTURE MANAGEMENT

It is the responsibility of the specifier to identify moisture related risks associated with any particular building design and site exposure.

Wall construction design must effectively manage moisture, accounting for both the interior and exterior environments of the building. This is particularly important in buildings that have a higher risk of wind driven rain penetration or that are artificially heated or cooled.

Where a deck is attached to the building and the Shadowclad extends below the deck to cover the framing, keep decking clear of the Shadowclad surface and detail to avoid moisture entrapment.

All wall openings, penetrations, junctions, connections, window sills, heads and jambs must incorporate Shadowclad flashings for waterproofing. Materials, components and the installation used to manage moisture in framed wall construction must, at a minimum, comply with the requirements of the NZBC.

2.7 WIND LOADING

Shadowclad is suitable for use in all wind zones up to and including extra high (55m/s) as defined by NZS 3604 and specific design wind pressures up to design differential ultimate limit state (ULS) of 2.5kPa.

2.8 DURABILITY

The durability level applicable to Shadowclad is dependent upon the application and coating applied. Detailing, treatment and installation methods need careful consideration to satisfy the requirements of the NZBC.

Exterior Cladding – 15 Year Durability

CHH Ply does not recommend Shadowclad is left uncoated when used as an exterior cladding.

The NZBC Clause B2 requires claddings to achieve a minimum structural durability level of 15 years.

Shadowclad coated with stains or paints (regardless of colour choice) will meet this requirement. However, if using dark colours (colours with an LRV of less than 50%) homeowners should expect an increased level of coating maintenance over the life of the cladding than would normally be expected where lighter colours are used.

Using dark colours with an LRV of less than 50% and failure to adequately maintain the surface coating of the cladding increases the risk of aesthetic related issues such as face checking. For this reason, CHH Ply does not support the use of dark colours on Shadowclad exterior cladding.

Additional Notes:
For further advice on coatings refer to section 5.0: Coating and Application – Exterior Cladding.

2.9 TEXTURED VS. SMOOTH FINISHED PLYWOOD AS EXTERIOR CLADDING

Structurally, some smooth faced plywood products may meet the requirements of E2/AS1 however in CHH Ply opinion smooth faced plywood does not retain a high visual appearance when directly exposed to weathering.

Where a high visual appearance is desired (such as exterior cladding) CHH Ply recommends the use of Shadowclad rather than smooth faced plywood.

Shadowclad features a textured (bandsawn) face which reduces the visibility of natural face checking which can occur in any wood based product which has been exposed to weather for a prolonged period.

Face checks are not considered a manufacturing fault as they are part of a natural process and are merely an indication that it is time to re-apply the surface coating on the product.

2.10 HEALTH & SAFETY

Shadowclad should be installed and used as per the Safety Data Sheet (SDS) which can be downloaded from www.shadowclad.co.nz.

Always wear safety glasses or non-fogging goggles when cutting Shadowclad panels and flashings.

If wood dust exposures are not controlled when machining (sawing, routing, planing, drilling etc.) a class P1 or P2 replaceable filter or disposable face piece respirator should be worn.

Wear comfortable work gloves to avoid skin irritation and the risk of splinters. Wash hands with mild soap and water after handling panels.

2.11 STORAGE & HANDLING

Shadowclad Panels:

- Keep Shadowclad® panels dry.
- Store under cover.
- Handle and stack with care to avoid damage.
- Stack flat; clear of ground, on at least three evenly spaced bearers.
- Store in well-ventilated areas away from sources of heat, flames or sparks.

Shadowclad Flashings:

- Keep dry. Should a shipment of Shadowclad flashings arrive in a wet condition, they should be immediately dried before storing.
- When storing flashings avoid contact with other metals which may cause scratches or marks. The use of shelving or racks faced with dry wood is recommended.
- Keep away from caustics, nitrates and acids.

3.0 INTERIOR LININGS

The use of untreated plywood is acceptable under NZS 3604, NZBC for internal wall and ceiling linings where NZS 3602 allows the use of untreated plywood.

For detailed installation advice for plywood used as an internal lining refer to www.chhply.co.nz.

4.0 INSTALLATION – EXTERIOR CLADDING

4.1 FRAMING – DURABILITY

Refer to NZBC Acceptable Solution B2/AS1 "Durability". External timber framing must be treated to a minimum H1.2 treatment. For timber treatment and allowable moisture content, refer to NZS 3602 as well as framing manufacturer's literature (e.g. Laserframe®). The current Laserframe Product Guide can be downloaded from www.chhwoodproducts.co.nz.

4.2 FRAMING – CONSTRUCTION

Use kiln dried framing such as Laserframe in accordance with timber framing manufacturer's specifications and treated in accordance with NZS 3602. The current Laserframe Product Guide can be downloaded from www.chhwoodproducts.co.nz.

Timber frame sizes and set out must comply with NZS 3604 (or specifically designed to NZS 3603) and with stud and nog centres and timber width required by this specification.

All Shadowclad sheet edges must be fully supported by framing.

- Studs must not exceed 600mm centres.
- Nogs must be provided at a maximum of 800mm centres.
  - When using vertical cover battens nogs at maximum 600 centres.
- An extra stud is required at internal corners for ventilated cavities.
- Refer to NZS 3602 for moisture content requirements as a guide, frame and cavity batten moisture content should be no greater than 20%.
- Framing must be kept as dry as possible at all times.
- Single spans of Shadowclad should not exceed 600mm (e.g. below windows or balustrades).

4.3 PREPARATION – BUILDING UNDERLAY & RIGID AIR BARRIER

The use of building underlay compliant with Table 23 of E2/AS1 or an alternative solution rigid air barrier must be provided over framing prior to the installation of exterior cladding.

- Barriers to air flow are required.
- Rigid air barriers are required in extra high wind zones and above.
- Rigid air barriers are also required in high wind zones and above for Ministry of Education school properties.

For more information on rigid air barriers refer to the current Ecoply Barrier Specification and Installation Guide which can be downloaded from www.ecoplybarrier.co.nz.

4.4 PREPARATION – CAVITY CONSTRUCTION

Cavity Construction

A Shadowclad cavity base closure must be installed at the bottom of all walls and above window heads, this provides vermin proofing to ventilation openings. The holes in the cavity base closure must be kept clear to enable ongoing drainage and ventilation of the cavity.

Cavity Battens

Cavity battens provide an air space between the frame and the sheet and are considered a "packer" when installed in accordance with Acceptable Solution E2/AS1.

The battens must be fixed over the building underlay or a rigid air barrier.

All timber battens must: be nominal 20mm thick (between limits of 18mm and 25mm in thickness); at least the same width as the stud; and minimum H3.1 LOSP treated in accordance with NZS 3640.

Polystyrene battens **must not** be used with H3.1 LOSP treated Shadowclad panels, as they may melt in contact with solvents.

Battens must be fixed over the building underlay/rigid air barrier to all studs, as follows.

If studs are at 600mm centres:

- Battens must be fixed vertically at 300mm centres (i.e. a batten on studs and one in between the two studs fixed to top and bottom plates and nogs).
- Battens fixed to studs are to support Shadowclad and restrain building underlay and insulation from bulging into the cavity.
- The Shadowclad must not be fixed to these cavity battens where there is no framing behind them.

If studs are at 400mm centres battens may be fixed on studs only.

Horizontal battens must be used at the top of the wall to block the top of the cavity from venting into the roof space.

Cavity spacers (i.e. short pieces of cavity batten) may be used to support the bottom sheet edge (or provide intermediate support where required e.g. above window openings) but must allow water drainage to the outside. The cavity spacers must be fixed at a 5° minimum slope with a 50mm minimum air gap at either side.

SC001: Typical Framing Setout (without Battens) Studs at 600 Centres

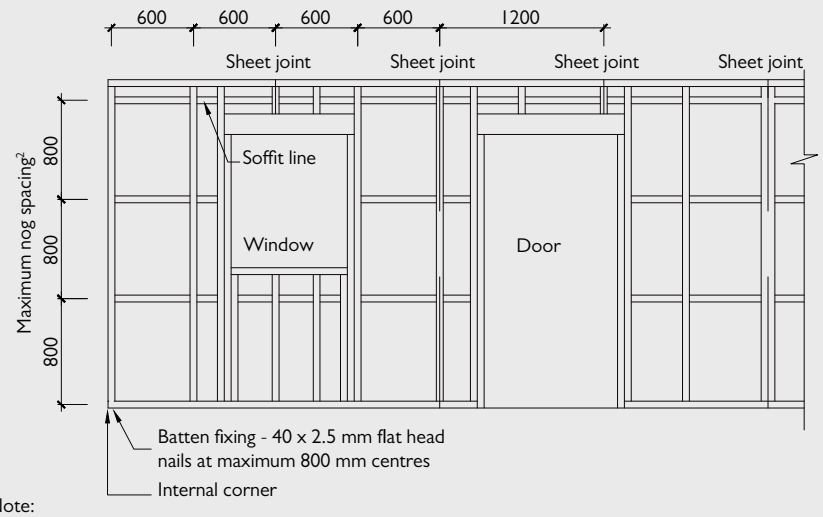

Note:
1. Single spans of Shadowclad® must not exceed 600 mm (e.g. below windows or on balustrades)
2. When using vertical cover battens, nogs at maximum 600 centres

SC001A: Typical Framing Setout (without Battens) Studs at 400 Centres

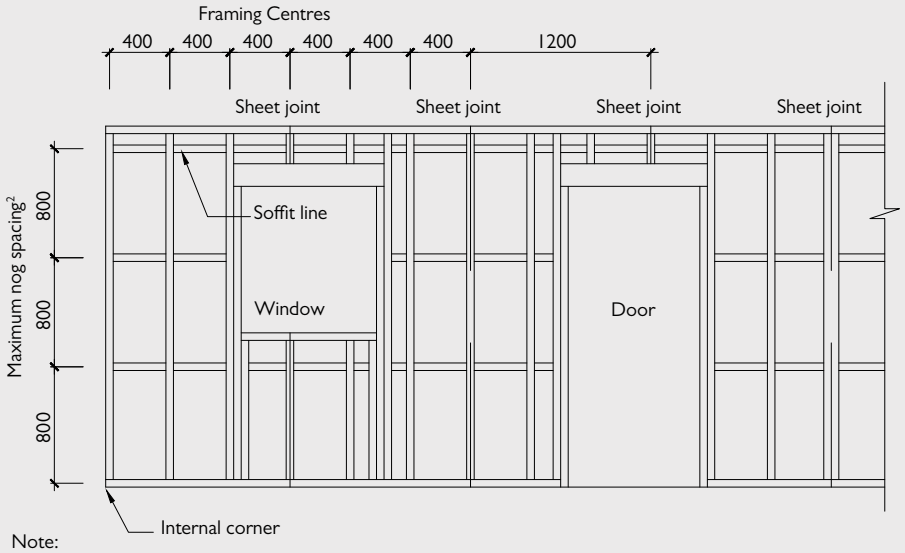

Note:
1. Single spans of Shadowclad must not exceed 600 mm (e.g. below windows or on balustrades)
2. When using vertical cover battens, nogs at maximum 600 centres

SC002: Typical Framing Setout (with Battens) Studs at 600 Centres

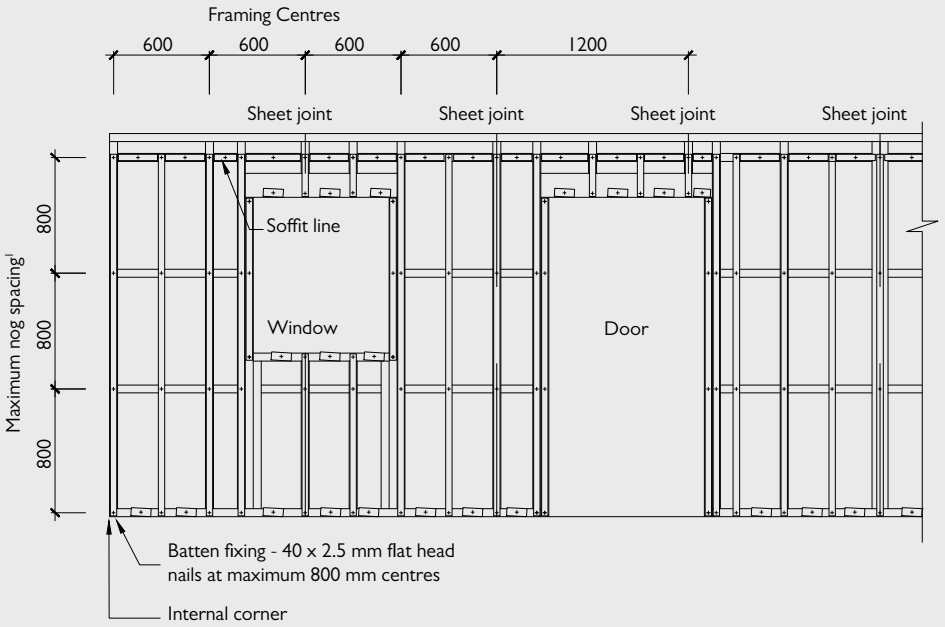

Note:
1. When using vertical cover battens nogs at maximum 600 centres

SC002A: Typical Framing Setout (with Battens) Studs at 400 Centres

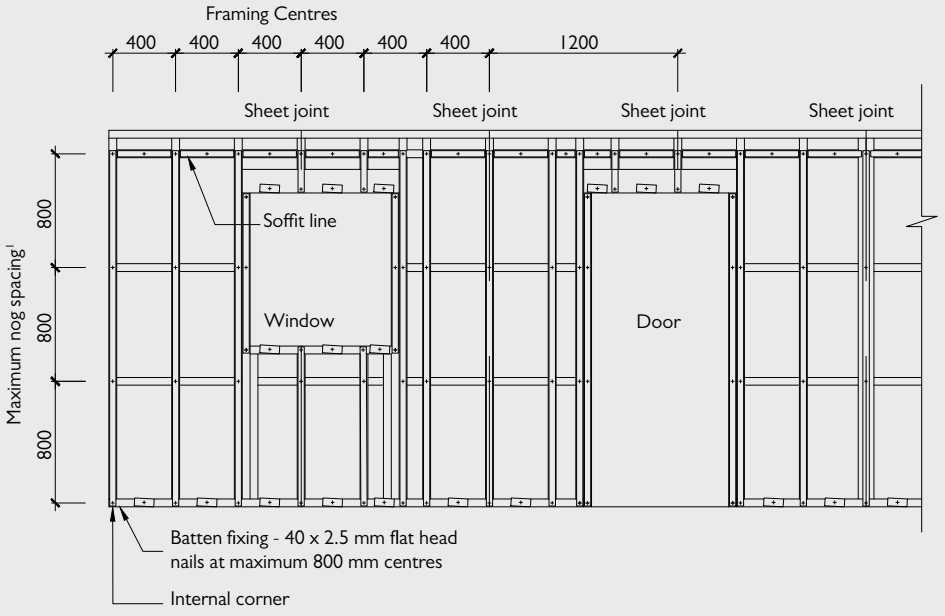

Note:
1. When using vertical cover battens nogs at maximum 600 centres

4.5 SHEET LAYOUT

A sheet layout should form part of architectural drawings and be used from the basis of stud/framing layout.

- Sheet edges must be supported by the framing.
- Sheets are designed to be vertically fixed. **Do not fix sheets horizontally.**
- When laying up on to framing, start at framing corners and work across the wall.
- All treated Shadowclad panels are envelope preservative treated. Where sheets are cut, edges **must** be coated with a brush on timber preservative such as Soudal® Metalex® Clear.
- Cut edges **must** be placed at the top of the sheet to avoid rain drips soaking in to cut end grains.
- Priming the bottom edges and the back (rear) of the sheets to a height of 150mm is required.
  - Shadowclad Ultra sheets are coated on the rear to a height of 150mm (minimum) to meet this requirement.

4.6 FIXINGS – FASTENER DURABILITY

Table 8: Fastener Durability for Shadowclad

Finish	Treatment	Exposure Zone (Refer to Section 4 of NZS 3604)	Material Required
Shadowclad Natural/Ultra	H3.1 LOSP	Zones B and C	Minimum hot dipped galvanised or better
		Zone D (sea spray)	Stainless Steel
Shadowclad Ultra	H3.2 CCA	All Zones	Stainless Steel

4.7 FIXINGS – FASTENER SIZE & LAYOUT

Table 9: Fastener Lengths for Shadowclad

	Minimum Fastener Length and Size (Cavity Fix)
Nails in Timber	60 x 2.8mm
Screws in Timber	8g x 65mm

Shadowclad **must** be nailed or screwed to timber as per below:

- Use flat head (full round head) nails or rose head nails with timber framing. Rose head nails should be considered where a more decorative fastener is desired.
- Standard fixing pattern: fasten sheet edges at 150mm centres and within the panel on all supports at 300mm centres.
- Do not fix to battens that are not installed over studs as the nails will puncture the building wrap.
- Fasten no closer than 7mm to sheet edges except on edge with top lap (weather groove lap), **do not nail through top lap.**
- Fasten Ship lap joints independently to ensure natural sheet expansion is not restricted.
- When using a rigid air barrier the Shadowclad fastener lengths should be increased by the thickness of the panel to ensure required fastener pull out loadings are achieved.
- Drive nails and screws flush.
- Do not nail through the grooves in Shadowclad Groove panels.

Power Driven Fastening

- Best practice is to hand drive nails as better control of nail depth is achieved.
- Paslode Impulse Nailers may be used to fire power driven nails. Refer to Paslode for suitable fasteners as per the minimum lengths stated in Table 9.
- Do not overdrive nails into the sheet.

Fixings at Vertical Sheet Join

Shadowclad Sheets must be fastened off independently to each other. SC006A and SC008A show specific fastener locations to accommodate the Ship lap joint. For Shadowclad Texture and Shadowclad Groove respectively fasten underlap 13mm from sheet edge, with overlap fasten 23mm from sheet edge as detailed.

SC003: Shadowclad Fastener Layout (Studs at 600 Centres Shown)

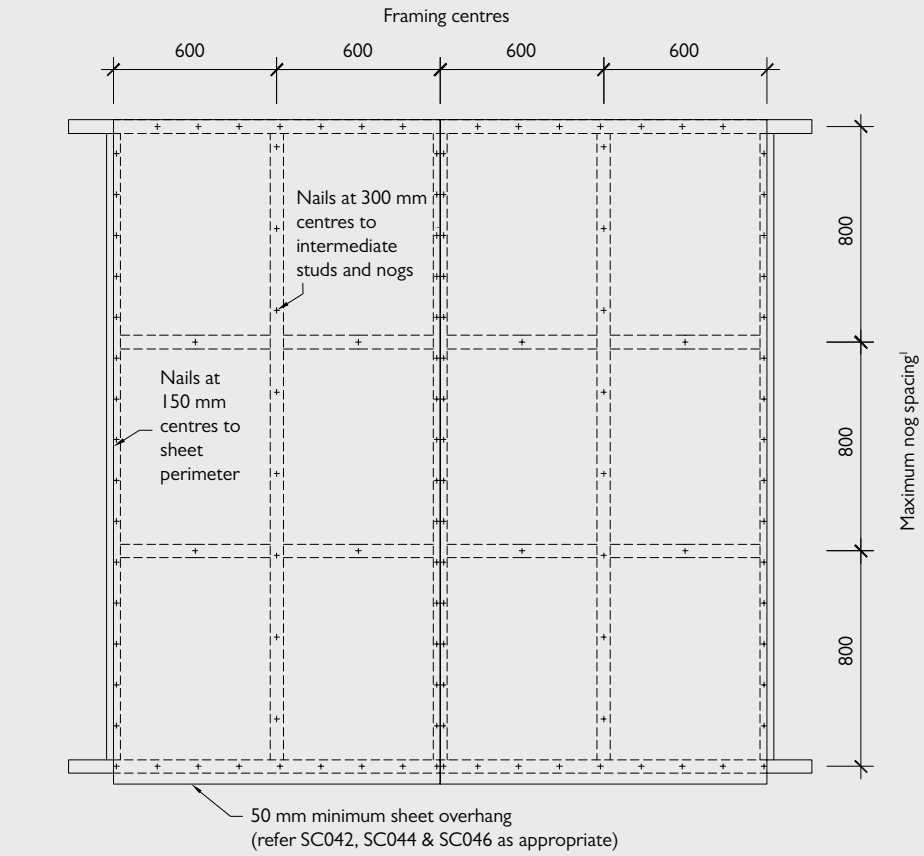

Note:
1. When using vertical cover battens nogs at maximum 600 centres

4.8 INSTALLATION TOOLS FOR SHADOWCLAD®

Correct installation and maintenance of Shadowclad® is necessary to ensure that compliance with the New Zealand Building Code, durability, structural integrity and weathertightness are maintained. CHH Ply have developed two installation tools to compliment the Shadowclad Specification and Installation Guides. These products are an extension of the Specification and Installation Guides and are available by contacting CHH Ply directly via www.shadowclad.co.nz or by calling 0800 326 759.

Shadowclad® sITe APP

The Shadowclad sITe APP is a tool for all building practitioners to aid in the installation of Shadowclad in accordance with the CHH Ply Specification and Installation Guides. The APP includes a context sensitive Key Design Points and Installation Checklist, access to all current literature, installation details, maintenance and other key installation requirements.

Shadowclad Stick

The Shadowclad Stick is an installation tool for Shadowclad. This tool removes the need for builders to develop their own 'jigs' to aid in ensuring that critical clearances, nail spacing's, etc. are applied during the installation of Shadowclad sheets. Section 11 of this literature provides information in relation to the use of the Shadowclad stick.

4.9 SHADOWCLAD KEY INSTALLATION & DESIGN POINTS

The following tasks are provided to installers to point out key installation and design factors when used as an exterior cladding. These do no detract from the requirements to read and understand this literature as a whole.

Task	Tick when checked
Prior to Specification and Installation	
Read the Shadowclad Specification and Installation Guide in its entirety	☐
Framing Plan	
Framing setout drawings to suit Shadowclad fixing and installation guidelines	☐
Sheet Cuts	
Coat all sheet cuts with a preservative timber treatment such as Soudal® Metalex® Clear	☐
After applying Soudal® Metalex® Clear, apply the surface coating (e.g. paint or stain) to cut edges	☐
Place uncut edge to bottom	☐
Fastener Material Type	
Galvanised fasteners or better used (Stainless steel annular groove nails required in sea spray zones and with H3.2 CCA treated Shadowclad Ultra)	☐
Sheet Fastener Pattern	
Around sheet edge – maximum 150mm centre spacing	☐
Within sheet body – maximum 300mm centre spacing	☐
Horizontal Sheet Joints	
Minimum 9mm separation gap between sheets above all Horizontal 'Z' flashings	☐
Prime the bottom of the sheet edge and 150mm up the back (rear) of the sheets	☐
50mm strip of neutral cure silicon sealant or stop ends at all 'Z' flashing terminations excluding terminations at Shadowclad metal corner flashings	☐
Back flashings or 150mm overlap to all flashing butt joints	☐
Expansion Gaps Between Sheets (Vertical Sheet Joints)	
Texture Profile Sheets - 2mm gap between vertical edges of sheets	☐
Groove Profile Sheets - 9mm gap (i.e. full groove space) between vertical edges of sheets	☐
Note: Expansion gaps required between vertical edges of sheets to accommodate natural expansion and contraction of sheets	
Ground Clearances	
Paved/Sealed Ground - minimum 100mm distance from the ground to sheet bottom	☐
Broken Ground - minimum 175mm distance from the ground to sheet bottom	☐
Prime the bottom of the sheet 150mm up the back (rear) of the sheet	☐

Refer to the current Shadowclad® Specification and Installation Guide for full installation specifications and suggested details.

4.10 VERTICAL SHEET JOINTS

Shadowclad sheets have a built-in Ship lap joint and weather groove on the long edges of all sheets.

When installing Shadowclad Groove profile sheets, use a 9mm temporary spacer in the groove alongside Ship lap joint to establish correct expansion gap.

Shadowclad is envelope preservative treated. Where sheets are cut, ends must be coated with a brush on timber preservative in accordance with the relevant manufacturer's instructions. Soudal® Metalex® Clear is recommended. Failure to properly apply preservative to cut edges will negatively affect the durability of cut panels.

SC004: Shadowclad Texture and Groove Sheet Dimensions

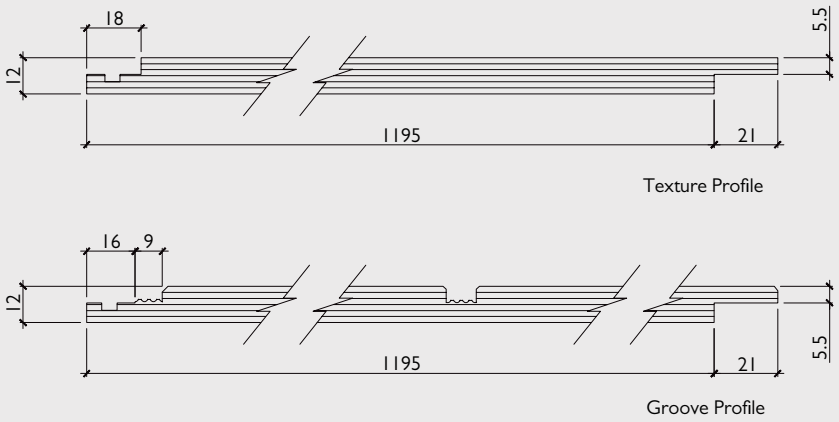

SC006: Shadowclad Texture Vertical Joint (Cavity)

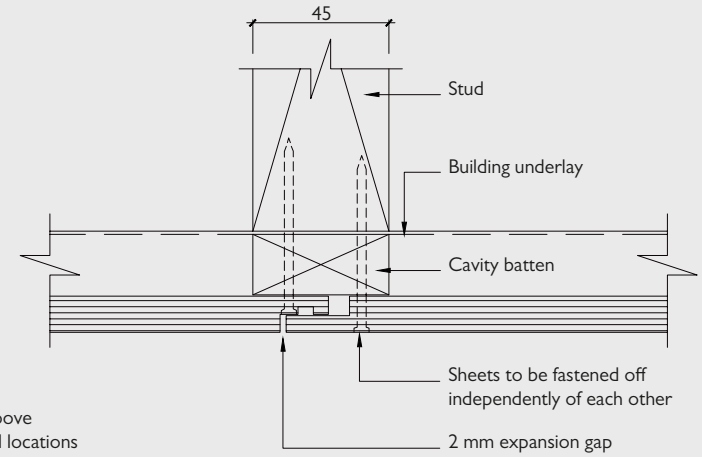

Note:
1. Do not nail through weather groove
2. Refer to SC006A for specific nail locations

SC006A: Shadowclad Texture Vertical Joint Fastener Locations (Cavity)

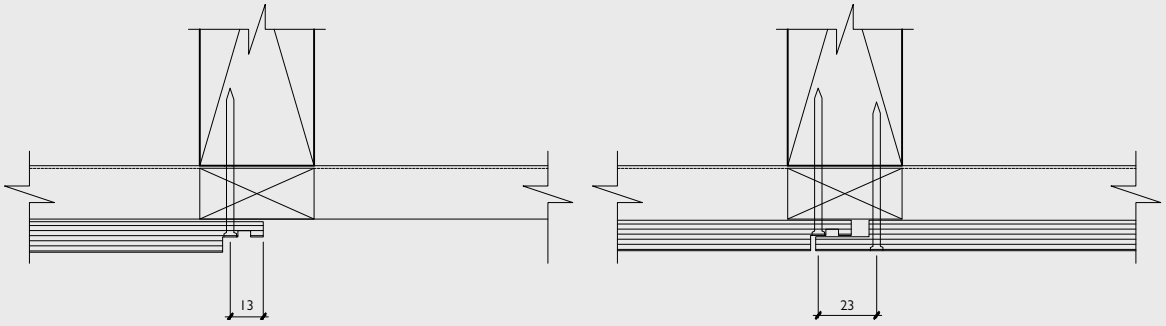

SC008: Shadowclad Groove Vertical Joint (Cavity)

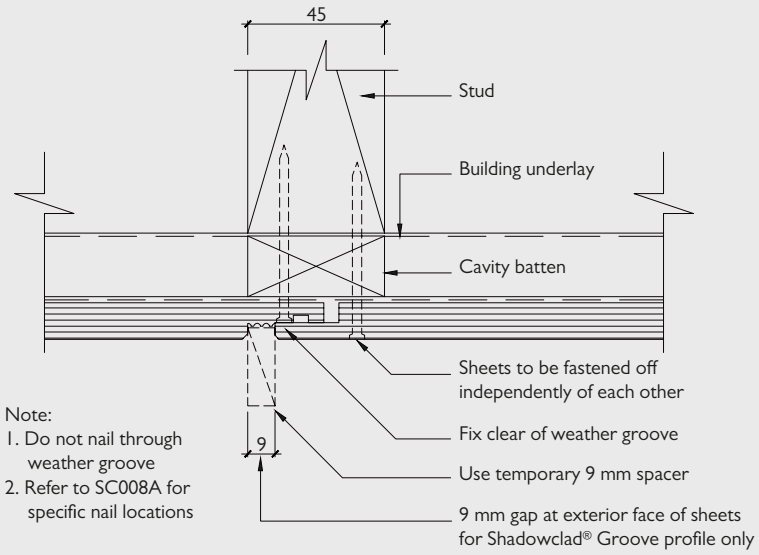

Note:
1. Do not nail through weather groove
2. Refer to SC008A for specific nail locations

SC008A: Shadowclad Groove Vertical Joint Fastener Locations (Cavity)

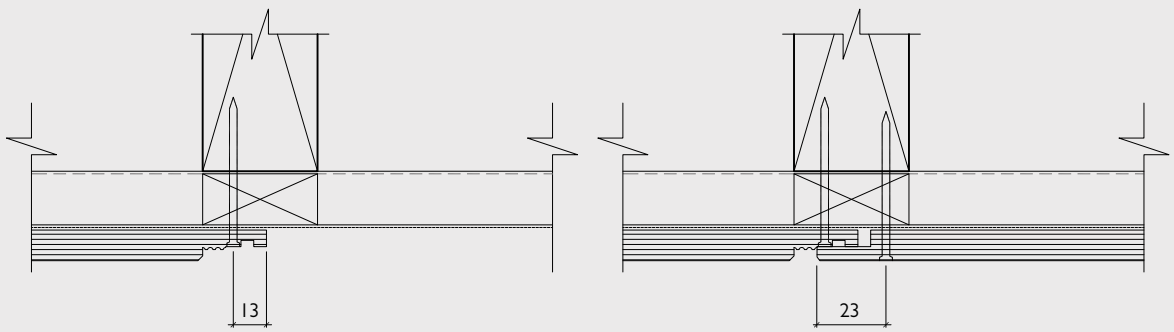

SC010: Shadowclad Vertical Joint with Optional Cover Batten (Cavity)

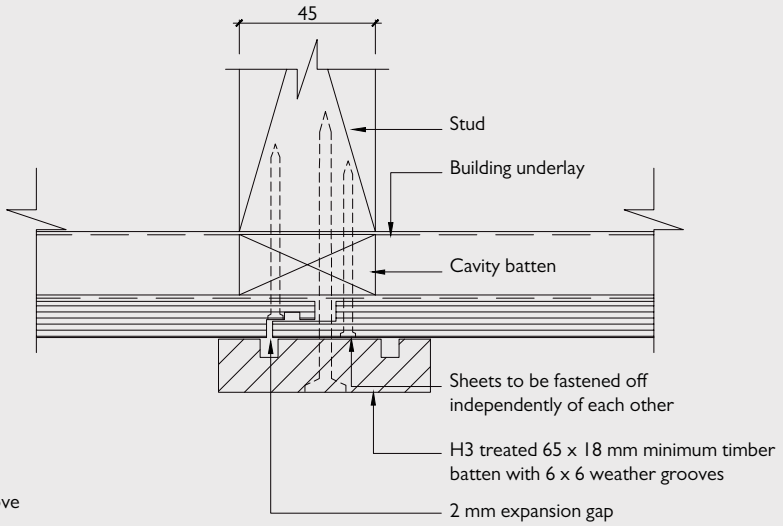

Note:
1. Do not nail through weather groove

SC012: Shadowclad Nogging for Vertical Cover Batten Between Studs (Cavity)

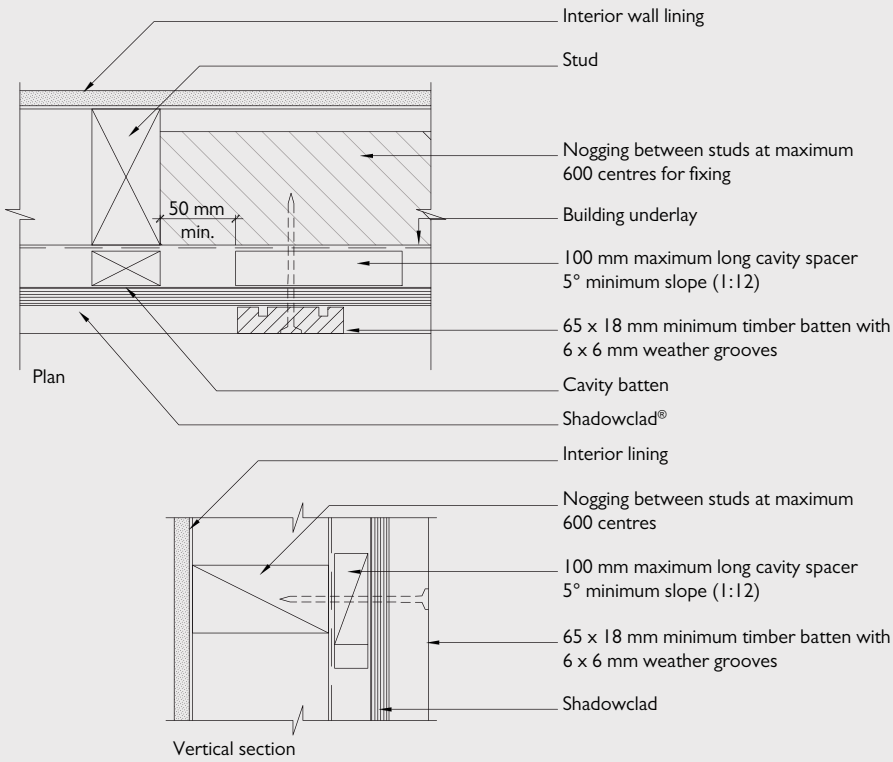

SC014: Shadowclad Vertical Joint with Top Hat Flashing (Cavity)

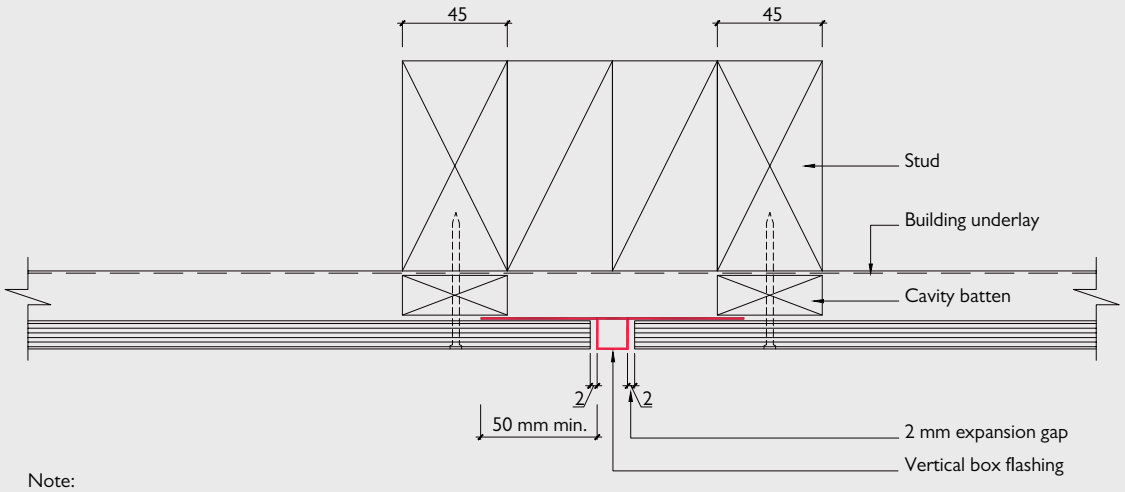

Note:
1. Treat all cut edges with Soudal® Metalex® Clear

4.11 HORIZONTAL SHEET JOINTS

At floor joist level a horizontal joint must be provided to accommodate the movement resulting from timber joist shrinkage and settlement.

A Shadowclad Horizontal 'Z' flashing should be used for horizontal sheet joints.

Acceptable Solution E2/AS1 requires drained cavities to be limited to a height of two storeys.

If aluminium 'Z' flashings are being used, all butt joints must include proprietary back flashings. Stainless steel flashings should be lapped by a minimum 150mm at joins.

A 50mm strip of neutral cure silicon (refer to SC0100 General Silicon Sealing of Horizontal 'Z' Flashings) or stop ends (as applicable) required at all 'Z' flashing terminations excluding terminations at Shadowclad metal corner flashings.

SC0100: Shadowclad General Silicon Sealing of Horizontal 'Z' Flashings

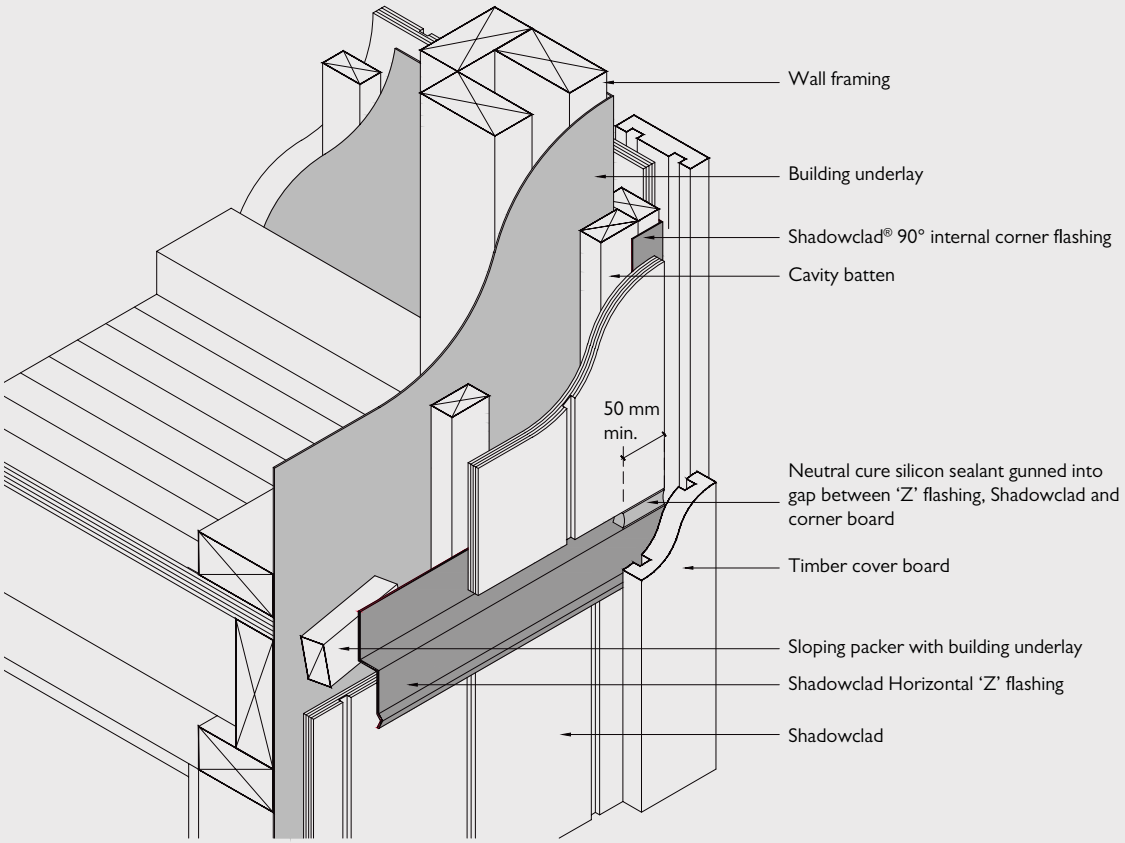

SC016: Shadowclad Mid Floor Horizontal Joint (Cavity)

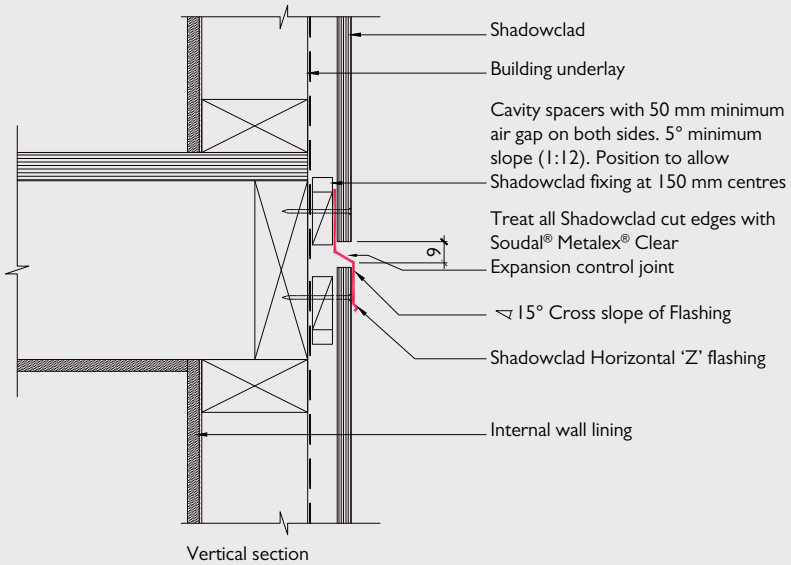

Vertical section

Notes:

1. 50 mm strip of neutral cure silicon sealant must be provided at the termination point of all 'Z' flashings at windows, corner boxes, etc (refer to SC0100)
2. Detail is only suitable for drained cavities up to two storeys or 7 m in height. For drained cavities over two storeys or 7 m in height refer to detail SC018 Horizontal Joint - Non Continuous (Cavity)
3. Back flashings or 150 mm overlap required at all horizontal flashing butt joints (refer to SC0102 and SC0104)
4. Treat all Shadowclad cut edges with Soudal® Metalex® Clear

SC018: Shadowclad Mid Floor Horizontal Joint – Non Continuous (Cavity)

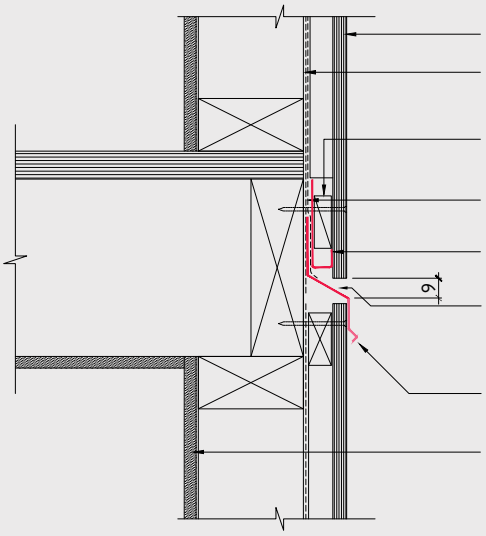

Vertical section

Notes:
1. Stop ends must be provided at the termination point of all inter-storey 'Z' flashings
2. Detail SC016 Mid Floor Horizontal Joint (Cavity) may be used for continuous cavity up to two storey or 7 m in height
3. Back flashings or 150 mm overlap required at all horizontal flashing butt joints (refer to SC0102 and SC0104)
4. Treat all Shadowclad cut edges with Soudal® Metalex® Clear

4.12 EXTERNAL CORNERS

SC020: Shadowclad External Corner with External Box Flashing (Cavity)

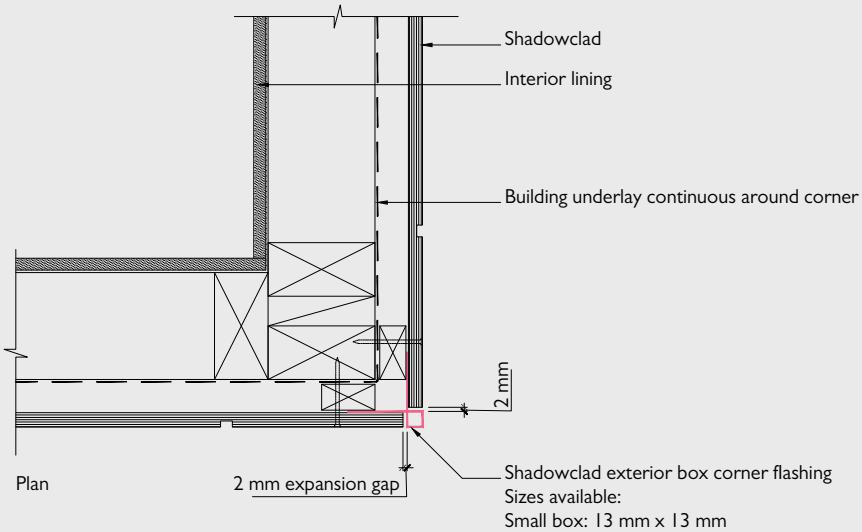

Plan

2 mm expansion gap

Note:
1. Treat all cut edges with Soudal® Metalex® Clear

SC022: Shadowclad External Corner with Cover Boards (Cavity)

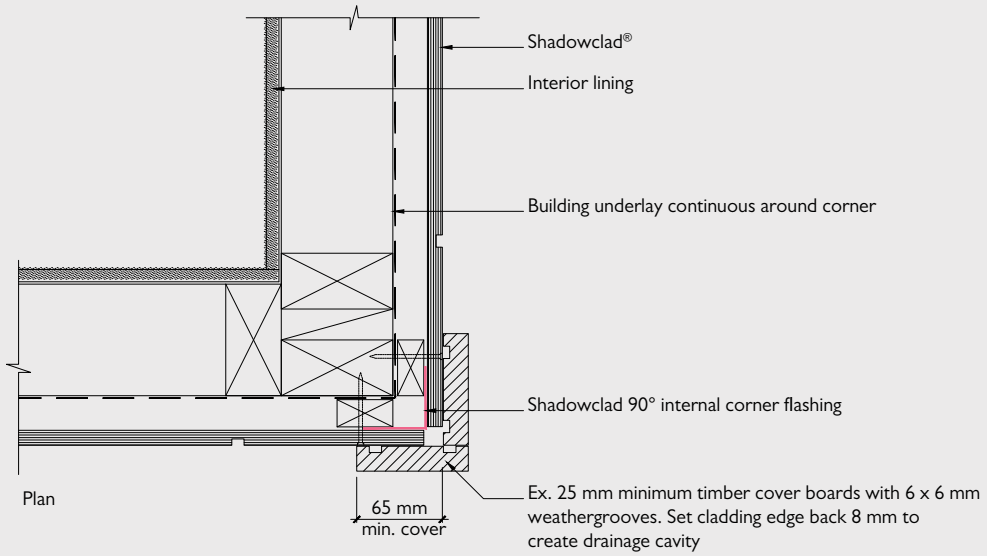

Note:
1. Treat all cut edges with Soudal® Metalex® Clear
2. 50 mm strip of sealant must be provided at the termination point of all 'Z' flashings at windows, corner boxes, etc. (refer to SC0100)

4.13 INTERNAL CORNERS

SC024: Shadowclad Internal Corner with 90˚ Flashing (Cavity)

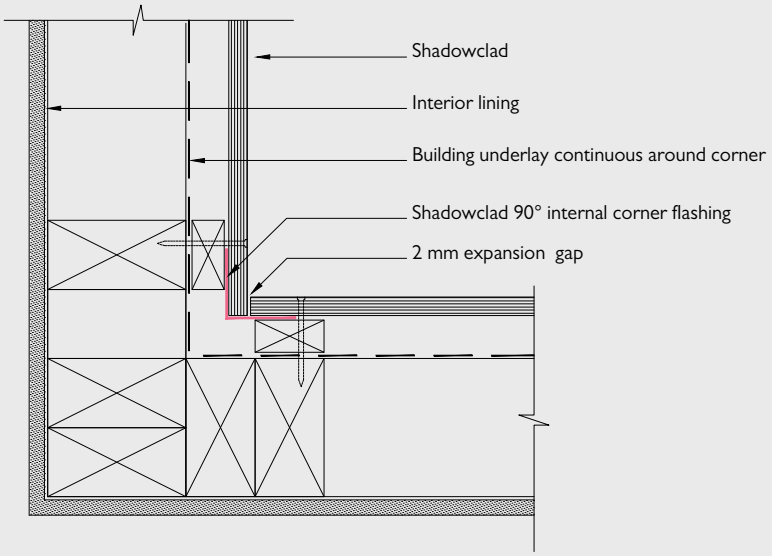

Plan

Note:
1. Treat all cut edges with Soudal® Metalex® Clear

SC026: Shadowclad Internal Corner with 'W' Flashing (Cavity)

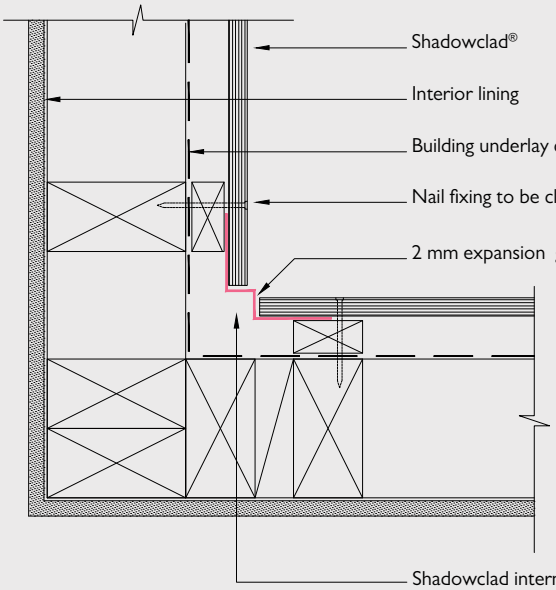

Plan

Note:
1. Treat all cut edges with Soudal® Metalex® Clear

4.14 SHADOWCLAD FLASHING JUNCTION POINTS

Flashings should have expansion joints where necessary to provide adequate allowance for thermal expansion as set out below.

- Expansion joints to be provided for joined flashings when their combined length exceeds 8 metres.
- Even if less than 8 metres in length, where both ends of a flashing are constrained and fixed, allowance should be made for expansion.

Cavity Base Closure

Fix Shadowclad cavity base closures to bottom plates through the upstand with 40 x 2.5mm, hot dipped galvanised or stainless steel (as appropriate) flat head nails at 300mm centres.

The cavity base closure should be positioned to allow a minimum drip edge to the wall cladding of 15mm at the base of walls, and 15mm above window head flashings.

Internal and External Flashings

Internal and external angles and 'Z' flashings can be nominally fixed with hot dipped galvanised or stainless steel (as applicable) flat head nails and then permanently fixed with the Shadowclad fasteners penetrating the flashing wings/upstands.

Horizontal 'Z' Flashings

Horizontal aluminium 'Z' flashings should be butted together with a back flashing to create a weathertight joint (refer to SC0102).

Stainless steel back flashings should overlap by a minimum of 150mm at joins to create weathertight joints where horizontal flashings meet (refer to SC0104).

'Z' Flashings Terminations

Where inter-storey 'Z' flashings terminate stop ends must be installed.

A 50mm strip of neutral cure silicon (refer to SC0100 General Silicon Sealing of Horizontal 'Z' Flashings) or stop ends (as applicable) required at all 'Z' flashing terminations excluding terminations at Shadowclad metal corner flashings.

SC0102: Shadowclad Aluminium Flashing Junctions and Connections (Cavity)

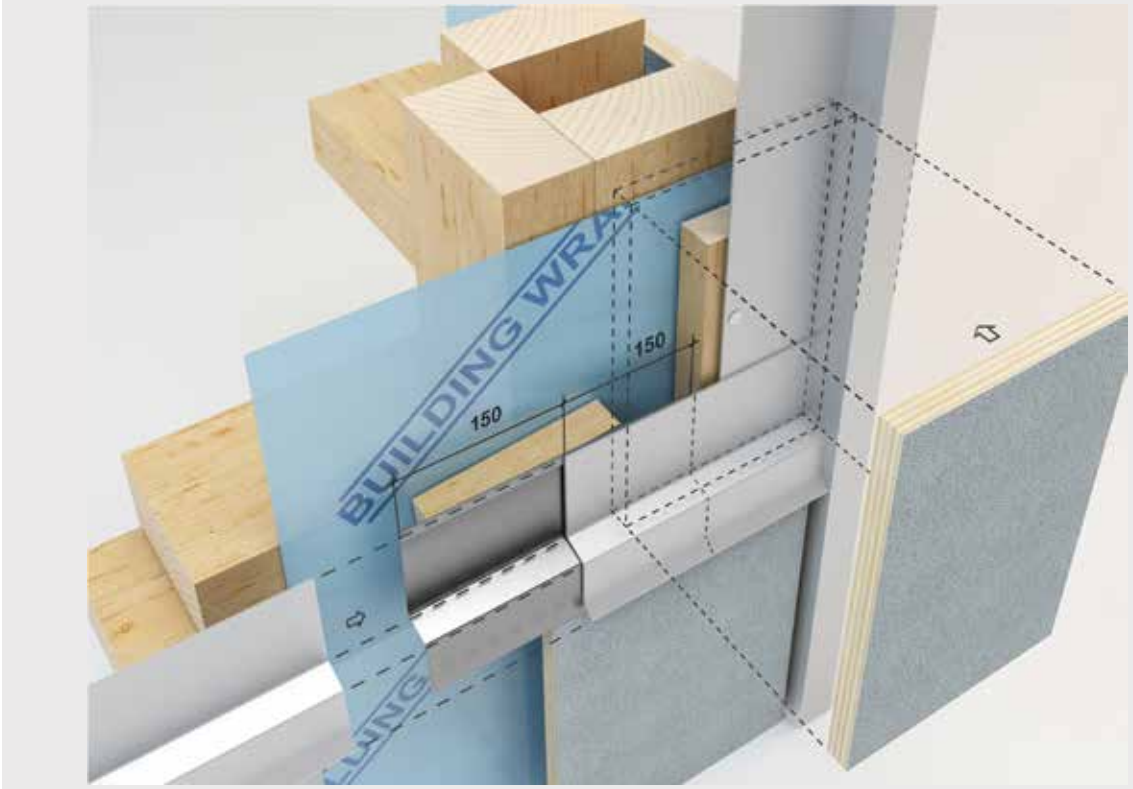

SC0104: Shadowclad Stainless Steel 'Z' Flashing Joins (Cavity)

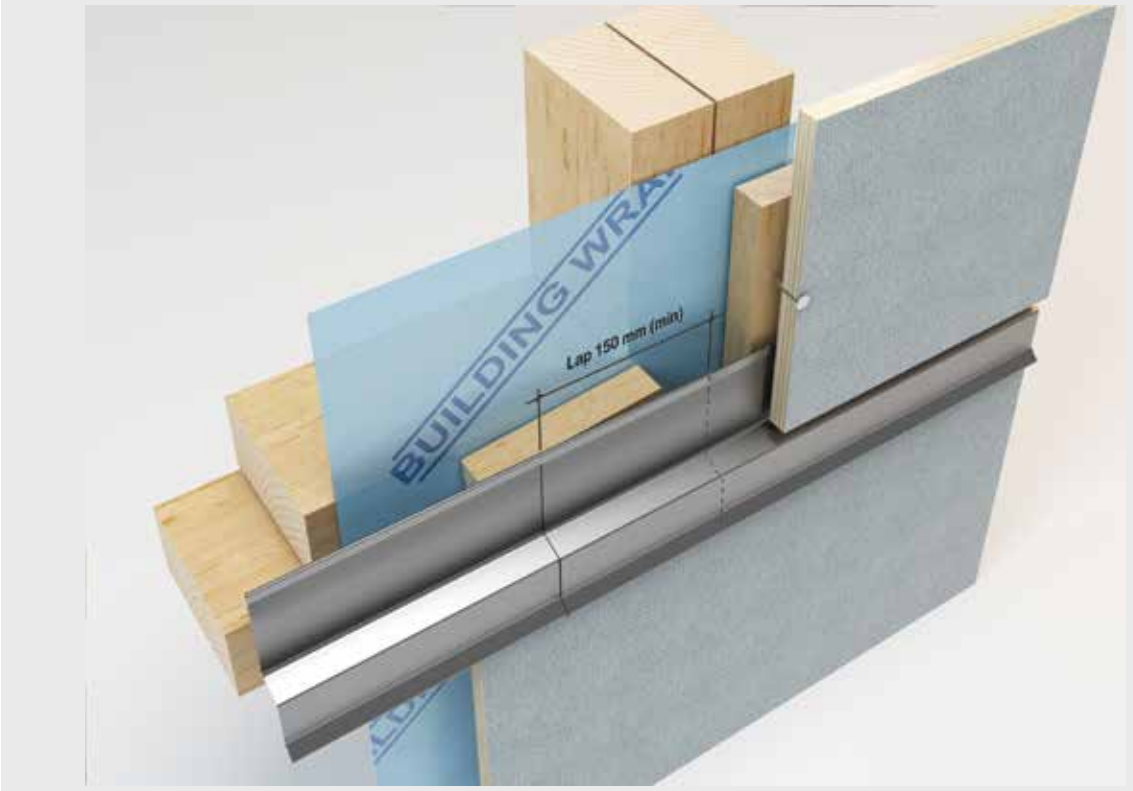

4.15 WINDOW PENETRATIONS

Window joinery flashings (i.e. head and sill flashings) should be sourced from the joinery fabricator to meet the requirements of Acceptable Solution E2/ASI or an Alternative Solution such as the Window Association of New Zealand Window Installation System (WANZ WIS) which can be downloaded at www.wanz.org.nz.

SC028: Shadowclad Window Head Detail (Cavity)

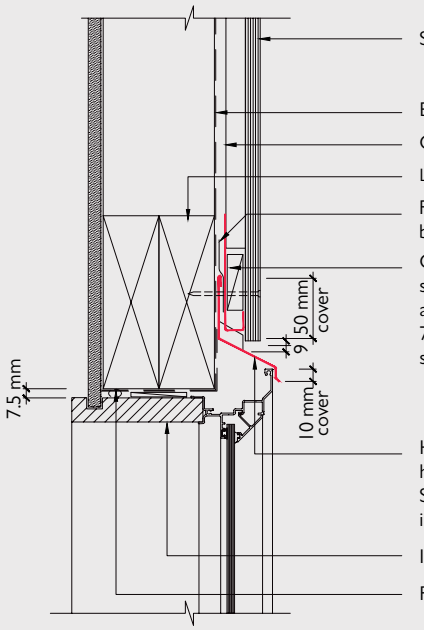

Shadowclad®

Building underlay

Cavity battens

Lintel

Flexible flashing tape strip placed over building underlay and flashing joint

Cavity spacers with 50 mm minimum air gap on both sides. 5° minimum slope (1:12). Position to allow Shadowclad fixing at 150 mm centres
75 mm minimum upstand cavity base closure vent strip. Position to give 15 mm drip edge to cladding

Head flashing with 15° slope. 15 mm high stop ends within cavity
Sealant between head flashing and window flange in very high wind zone and above

Interior jamb liner over timber packer

Fit air seal over PEF

Note:
1. Treat all cut edges with Soudal® Metalex® Clear
2. Stop ends to head flashing terminations



SC030: Shadowclad Jamb Detail (Cavity)

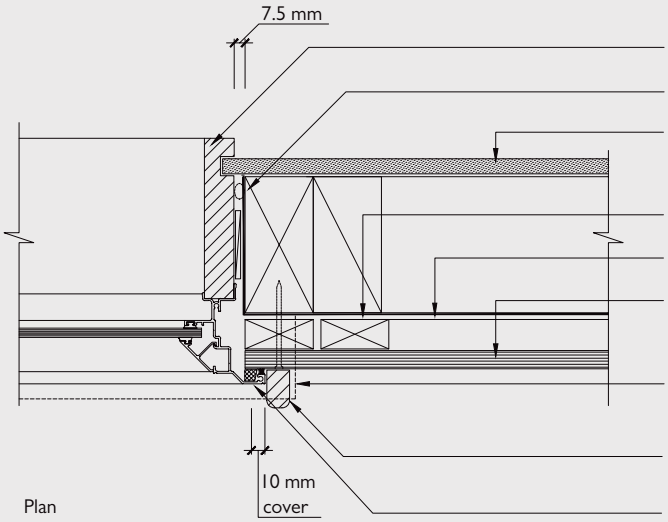

Interior jamb liner over timber packer

Fit air seal over PEF rod

Interior lining

Flexible flashing tape (as required as building underlay/rigid air barrier) Refer E2/AS1

Building underlay

Shadowclad® Treat all cut edges with Soudal® Metalex® Clear

Head flashing to overhang joinery line for 20 mm minimum cover

Optional scriber

Continuous protective seal with foam bond breaker to form rain screen

Note:
1. Treat all Shadowclad cut edges with Soudal® Metalex® Clear
2. 50 mm strip of sealant must be provided at the termination point of all 'Z' flashings at windows, corner boxes, etc



SC032: Shadowclad Window Sill Detail (Cavity)

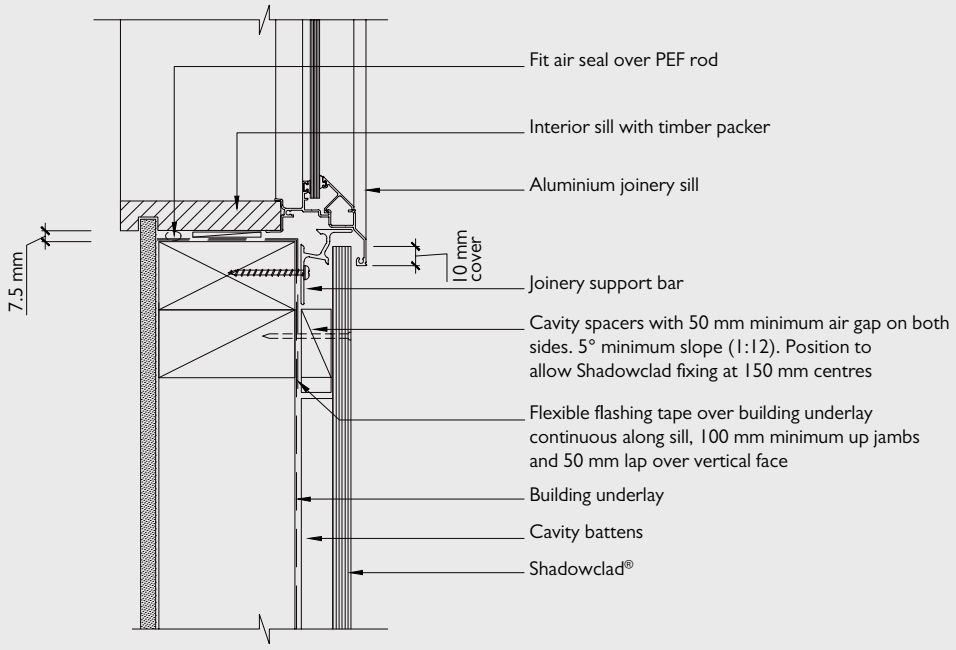

Vertical section

Note:
1. Treat all cut edges with Soudal® Metalex® Clear

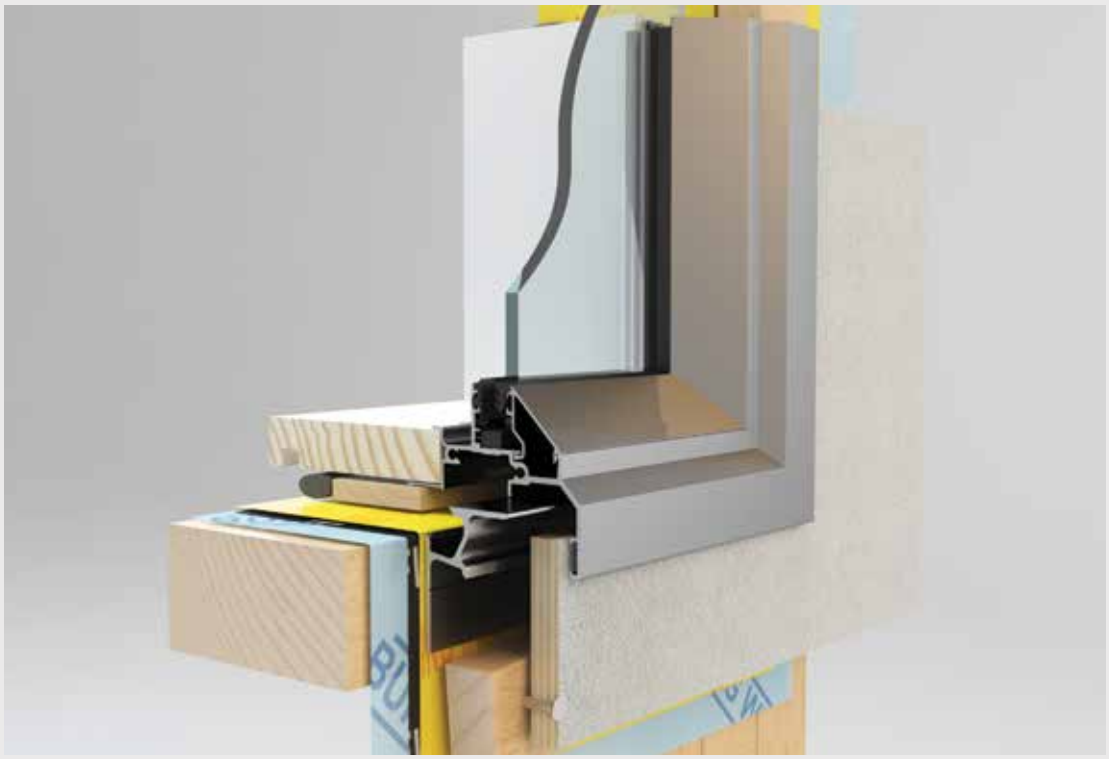

4.16 WALL PENETRATIONS

SC034A: Shadowclad Meterbox Vertical Cross Section (Cavity)

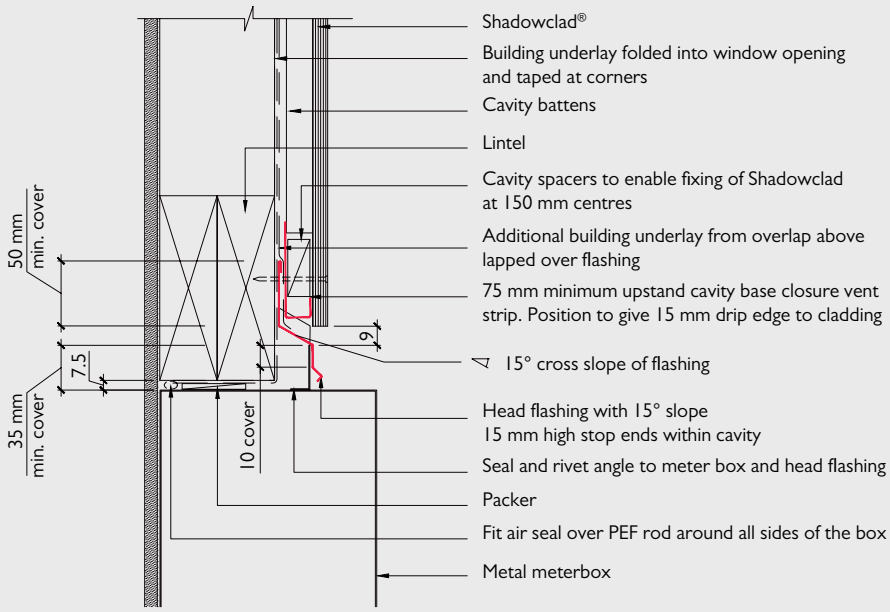

Vertical section

Note:
1. Treat all cut edges with Soudal® Metalex® Clear
2. Priming the bottom edge and back (rear) of the sheets to a height 150 mm is required

SC034B: Shadowclad Meterbox Horizontal Cross Section (Cavity)

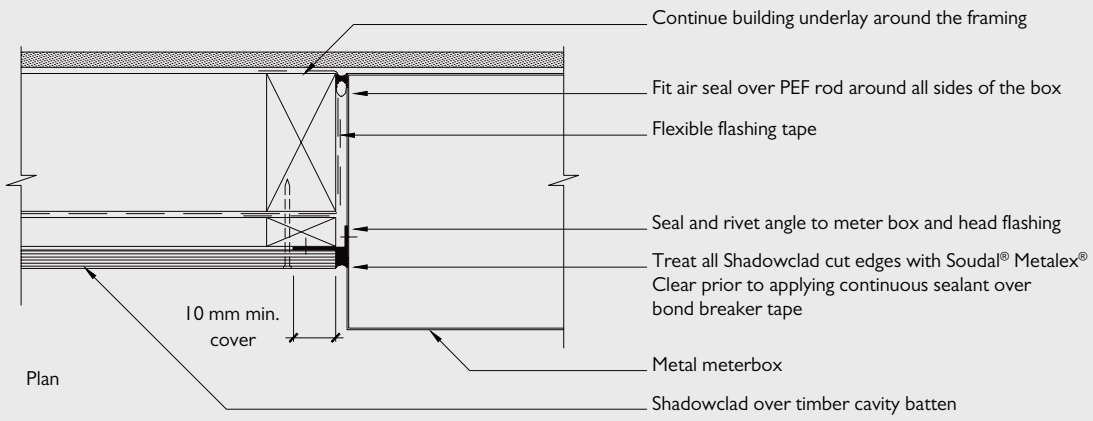

Plan

Note:
1. Treat all cut edges with Soudal® Metalex® Clear
2. 50 mm strip of neutral cure silicon sealant must be provided at termination points of all 'Z' flashings at meter boxes

SC036: Shadowclad Soffit Detail (Cavity)

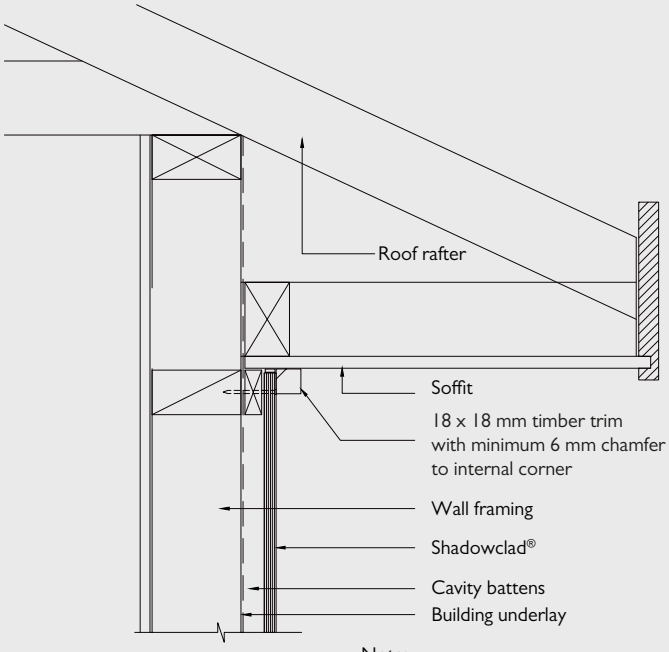

Vertical section

Note:
1. Cut edges should be placed at the top of the sheet to avoid rain drips soaking into cut end grains
2. Treat all cut edges with Soudal® Metalex® Clear

SC036A: Shadowclad Alternative Soffit Detail (Cavity)

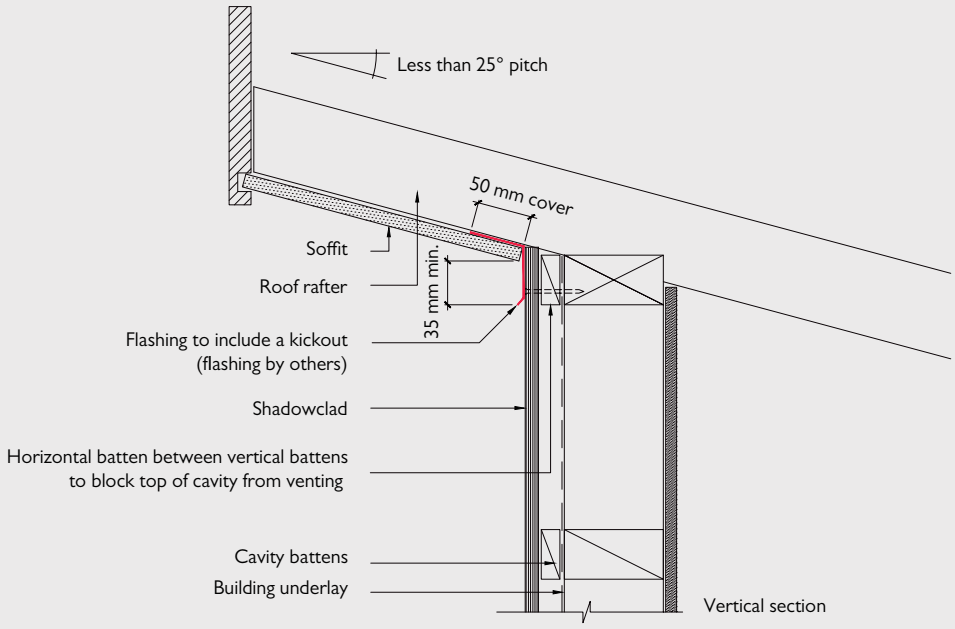

Note:
1. Cut edges should be placed at the top of the sheet to avoid rain drips soaking into cut end grains
2. Treat all cut edges with Soudal® Metalex® Clear

SC038: Shadowclad Soffit Alternative Detail (Cavity)

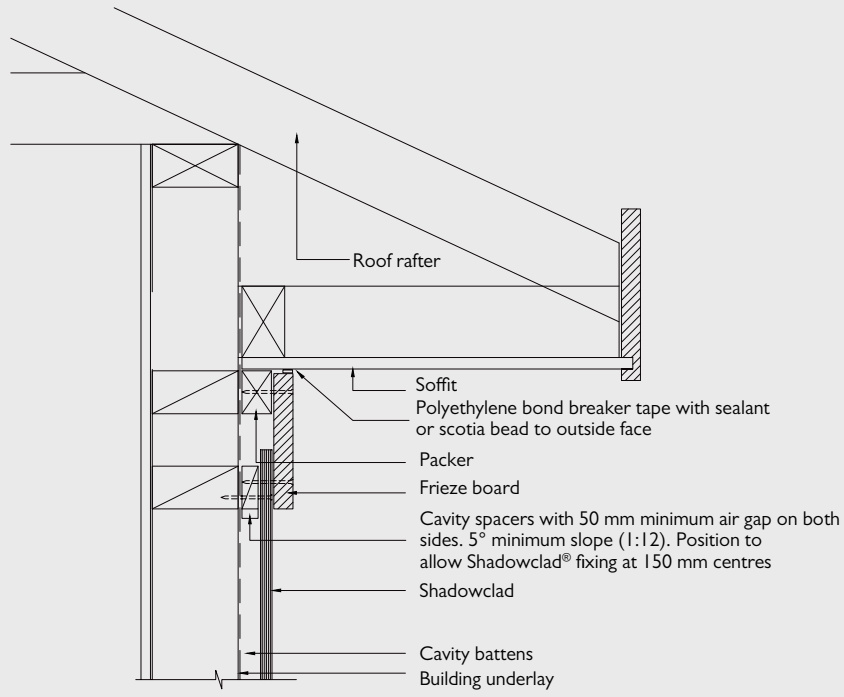

Note:
1. Cut edges should be placed at the top of the sheet to avoid rain drips soaking into cut end grains
2. Treat all cut edges with Soudal® Metalex® Clear

SC038A: Shadowclad Alternative Soffit Detail (Cavity)

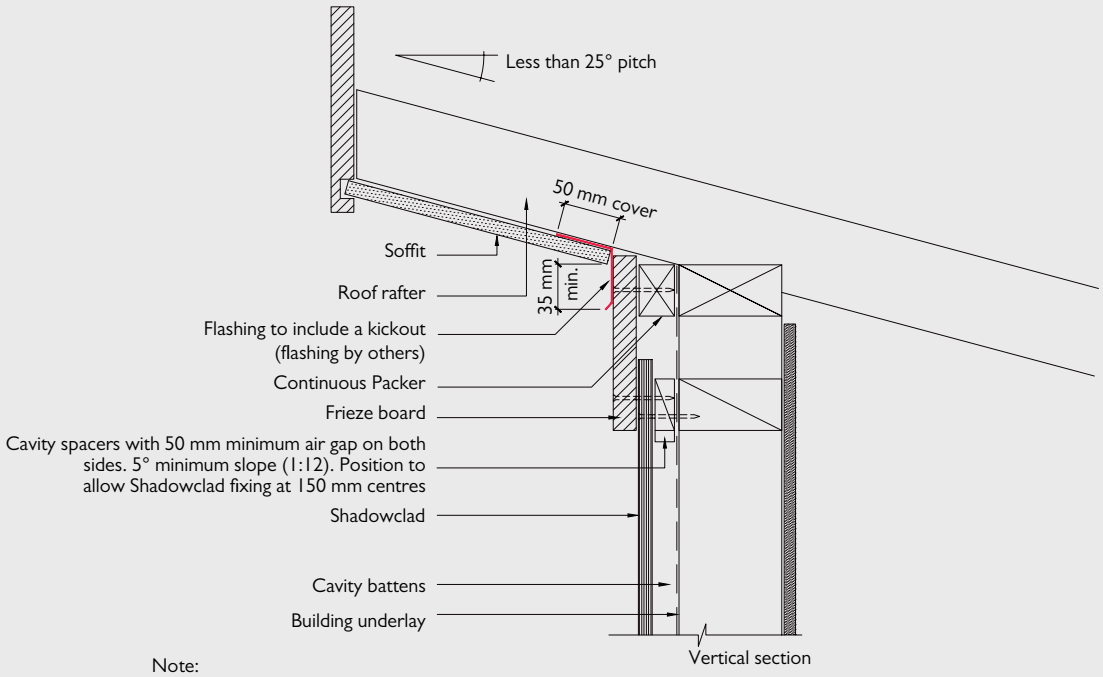

Note:
1. Cut edges should be placed at the top of the sheet to avoid rain drips soaking into cut end grains
2. Treat all cut edges with Soudal® Metalex® Clear

SC040: Shadowclad Pipe Penetration (Cavity)

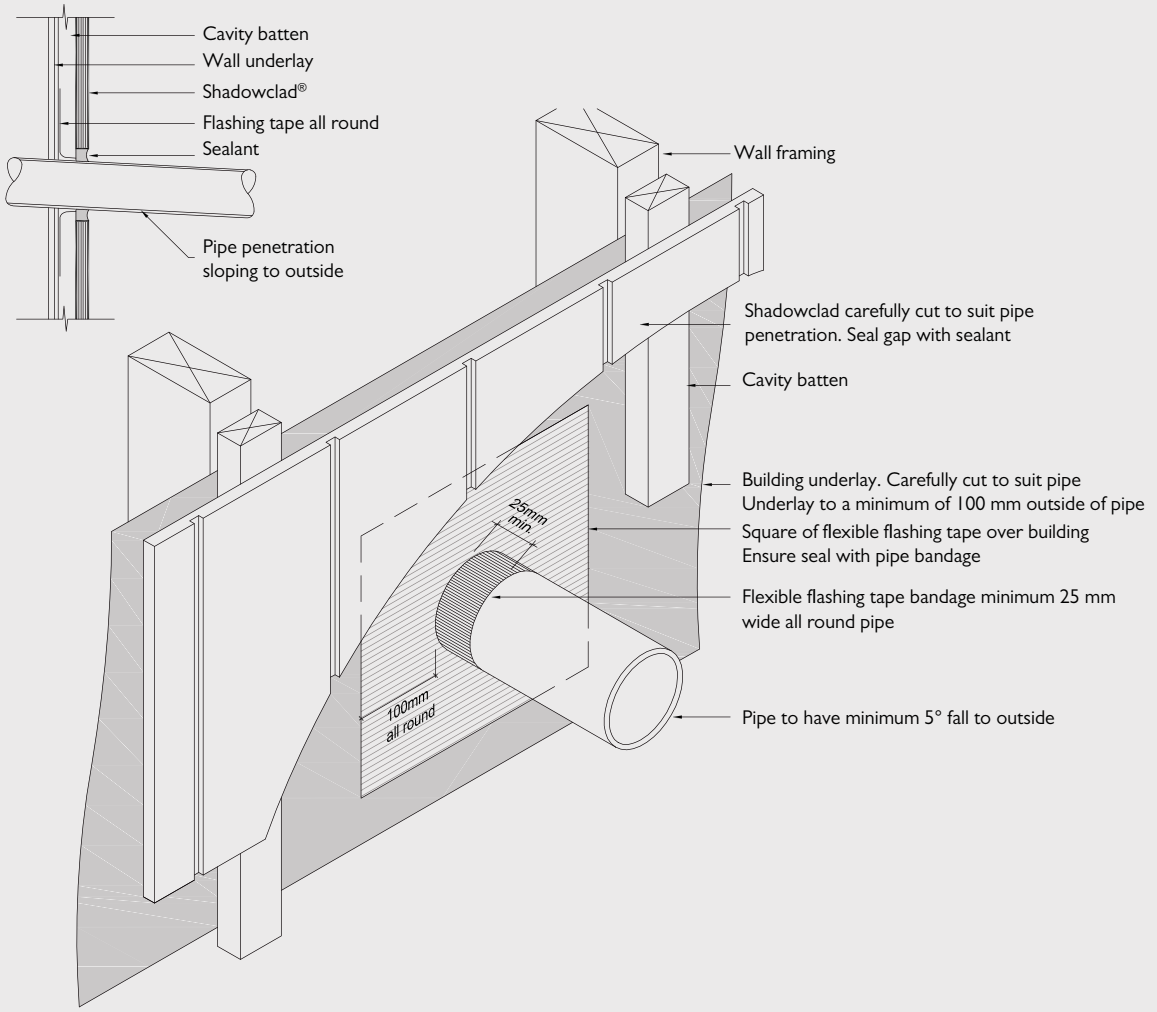

4.17 SHEET CLEARANCES

Ground Clearances

Shadowclad must overhang the bottom plate on a concrete slab by a minimum of 50mm as required by NZS 3604 and E2 - External Moisture. Maximum distance from the bottom of the sheet to the fixing shall not exceed 75mm.

The bottom edge of the Shadowclad sheet must be a minimum of 50mm above decks and verandahs, 100mm above paved ground and a minimum of 175mm above unprotected ground.

For garage door openings, refer Paragraph 9 "Openings to garages" in Acceptable Solution E2/AS1.

SC042: Shadowclad Overhangs and Ground Clearances (Cavity)

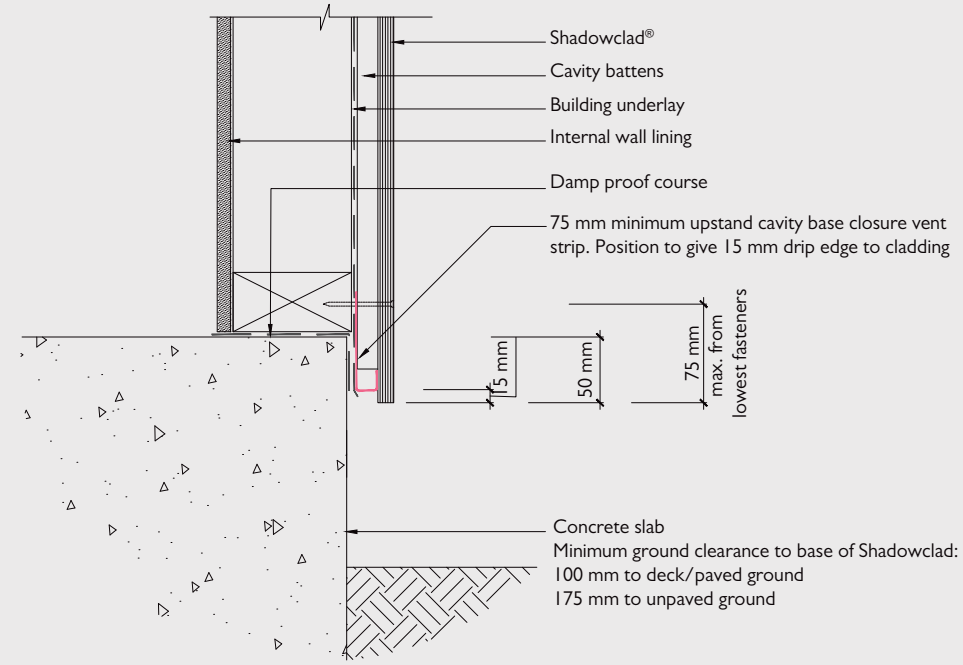

Vertical section

Note:
1. Cut edges should be placed at the top of the sheet to avoid rain drips soaking into cut end grains
2. Treat all cut edges with Soudal® Metalex® Clear
3. Priming the bottom edge and back (rear) of the sheets to a height 150 mm is required

SC042A: Shadowclad Overhang for Timber Ground Floor to Non-Cantilevered Wall

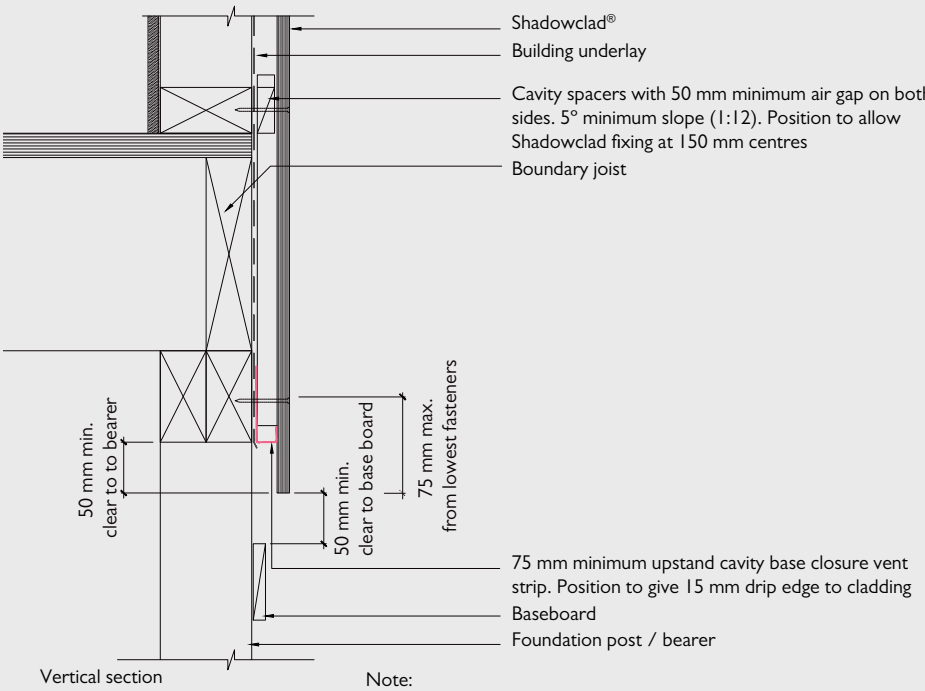

Note:
1. Cut edges should be placed at the top of the sheet to avoid rain drips soaking into cut end grains
2. Treat all cut edges with Soudal® Metalex® Clear
3. Priming the bottom edge and back (rear) of the sheets to a height 150 mm is required

SC042B: Shadowclad Overhang for Timber Ground Floor to Cantilevered Wall

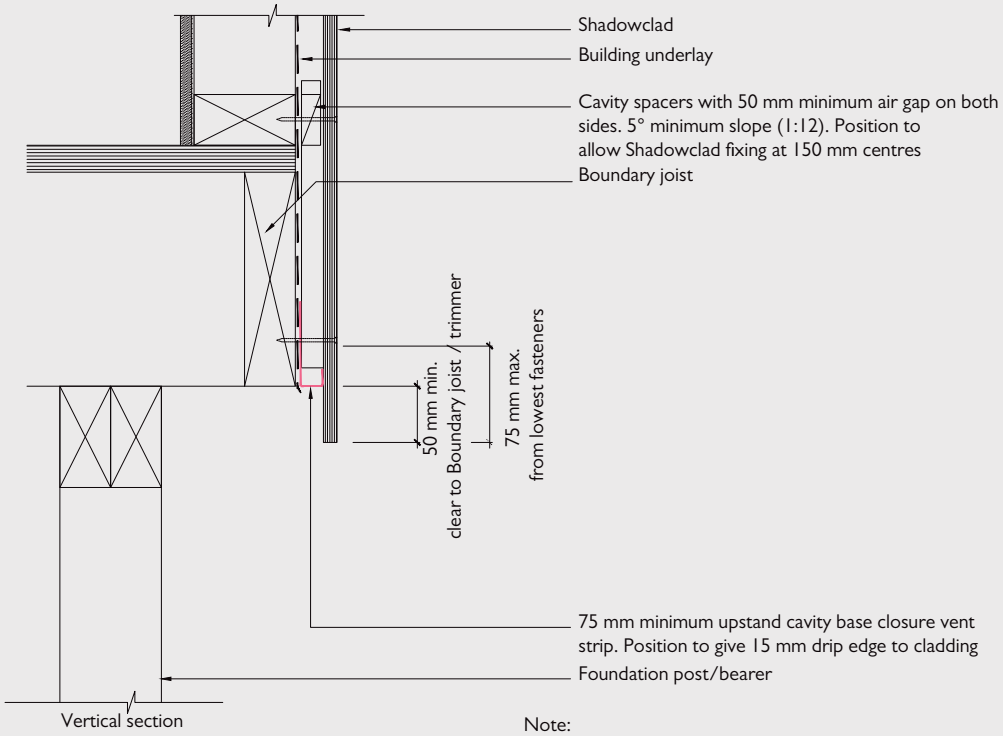

Note:
1. Cut edges should be placed at the top of the sheet to avoid rain drips soaking into cut end grains
2. Treat all cut edges with Soudal® Metalex® Clear
3. Priming the bottom edge and back (rear) of the sheets to a height 150 mm is required

SC044: Shadowclad Upper Storey to Masonry Lower Storey (Cavity)

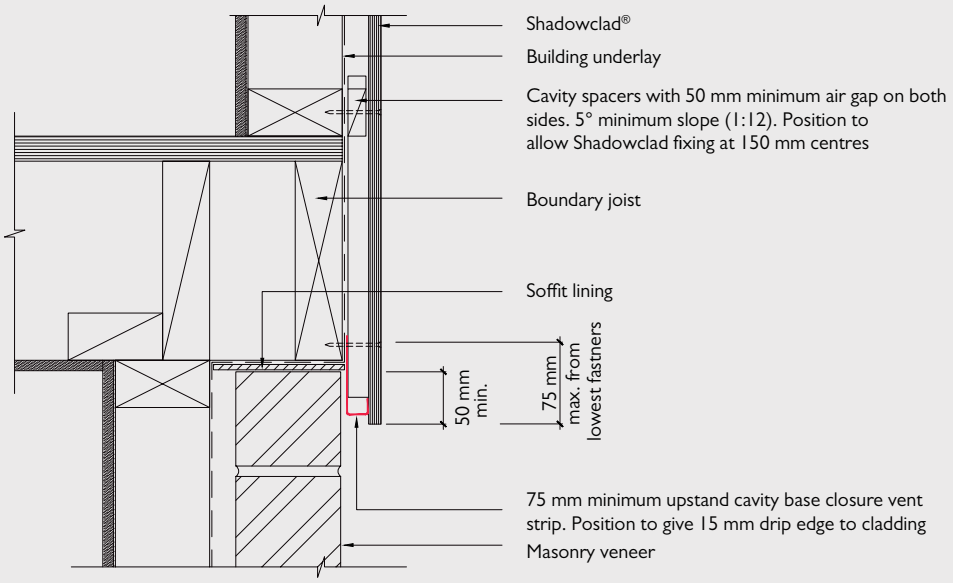

Vertical section

Note:
1. Cut edges should be placed at the top of the sheet to avoid rain drips soaking into cut end grains
2. Treat all cut edges with Soudal® Metalex® Clear
3. Priming the bottom edge and back (rear) of the sheets to a height 150 mm is required

4.18 OTHER DETAILS

SC046: Shadowclad® Timber Ground Floor to Non-Cantilevered Deck (Cavity)

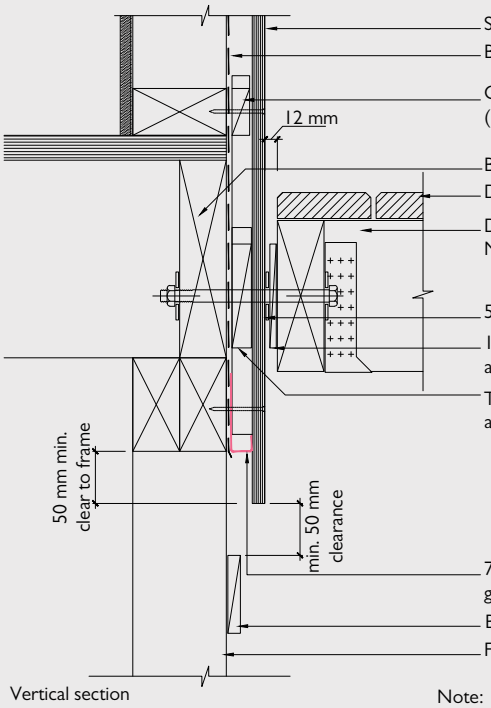

Vertical section

- Shadowclad®
- Building underlay
- Cavity spacers with 50 mm minimum air gap on both sides. 5° minimum slope (1:12). Position to allow Shadowclad fixing at 150 mm centres
- Boundary joist
- Decking
- Deck joists attached to stringer with joist hangers Refer NZS3604 for fixing details Shadowclad sealed prior to fixing packer
- 50 x 3 mm thick EPDM washer
- 12 mm thick by 150 mm long H3.2 CCA treated solid timber packer at fixings
- Timber packer behind Shaowclad with 5° slope to top of packer as per cavity battens
- 75 mm minimum upstand cavity base closure vent strip. Position to give 15 mm drip edge to cladding
- Baseboard
- Foundation post/bearer

Note:
1. Cut edges should be placed at the top of the sheet to avoid rain drips soaking into cut end grains
2. Treat all cut edges with Soudal® Metalex® Clear
3. Priming the bottom edge and back (rear) of the sheets to a height 150 mm is required

SC048: Shadowclad Mid Floor to Non-Cantilevered Deck (Cavity)

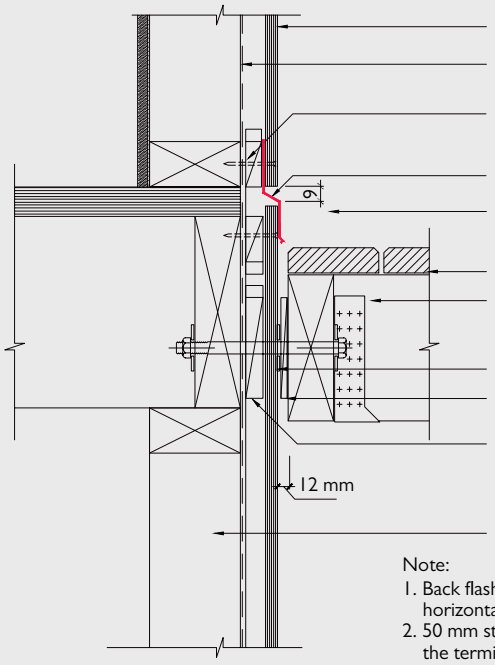

Vertical section

- Shadowclad
- Building underlay
- Cavity spacers with 50 mm minimum air gap on both sides. 5° minimum slope (1:12). Position to allow Shadowclad fixing at 150 mm centres
- ◁15° cross slope of flashing
- Shadowclad Horizontal 'Z' head flashing
- Decking
- Deck joists attached to stringer with joist hangers. Refer NZS3604 for fixing details Shadowclad sealed prior to fixing packer
- 50 x 3 mm thick EPDM washer
- 12 mm thick by 150 mm long H3.2 CCA treated solid timber packer at fixings
- Timber packer behind Shaowclad with 5° slope to top of packer as per cavity battens
- Foundation / wall detail

Note:
1. Back flashing or 150 mm overlap required at all horizontal flashing butt joints
2. 50 mm strip of neutral cure silicon sealantmust be provided at the termination point of all 'Z' flashings at windows, corner boxes, etc
3. Treat all cut edges with Soudal® Metalex® Clear

SC050: Shadowclad Basic Apron Flashing (Cavity)

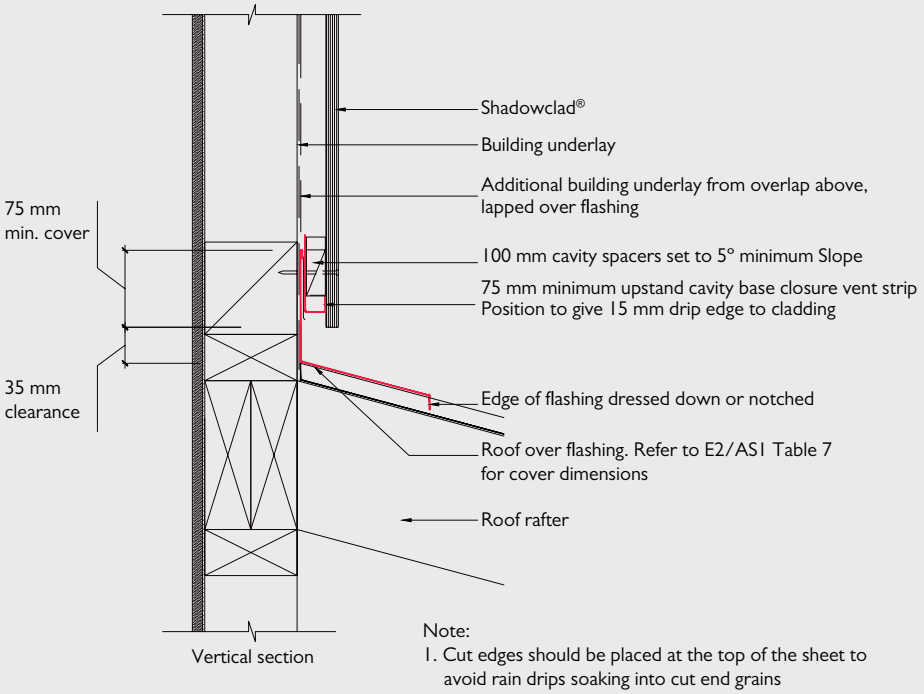

Note:
1. Cut edges should be placed at the top of the sheet to avoid rain drips soaking into cut end grains
2. Treat all cut edges with Soudal® Metalex® Clear
3. Priming the bottom edge and back (rear) of the sheets to a height 150 mm is required

SC052: Shadowclad Balustrade to Wall Junction (Cavity)

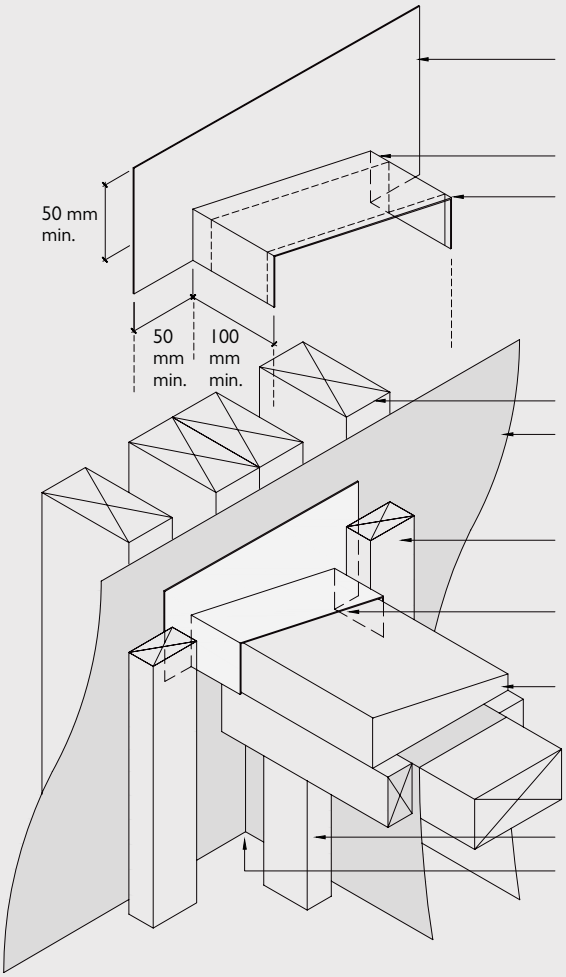

Metal saddle flashing installed behind the cladding line

Continuous lines of sealant

Continuous lines of sealant

Wall framing

Building underlay

Position cavity batten to form clear channel between sloped timber capping and batten

Flexible flashing tape dressed up and securely adhered to wall underlay at rear of cavity
Dress 50 mm minimum down vertical face of battens

Sloping packer to extend across cavity with 5° minimum fall to interior side

Cavity batten

Drain channel formed in corner

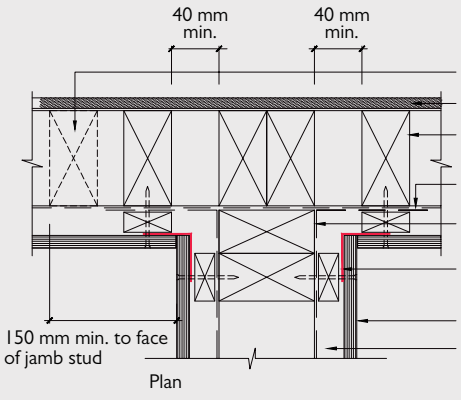

Plan

Window trimming stud

Wall lining

Wall framing

Building underlay

Parapet underlay continuous around corner

Shadowclad 90° internal corner flashing

Shadowclad®

Cavity batten

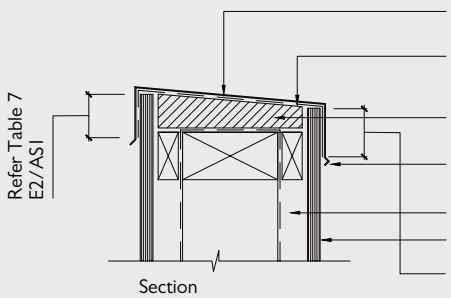

Section

Metal saddle capping flashing.
5° minimum slope (1:12) to interior line

Building underlay to provide separationpan between capping and timber

Sloping timber packer extends across cavity both sides

Bird's beak edge where used as ballustrade capping

Cavity batten

Shadowclad

Refer Table 7 E2/AS1

Note:
1. Treat all cut edges with Soudal® Metalex® Clear

SC054: Shadowclad Balustrade to Wall Junction (Cavity)

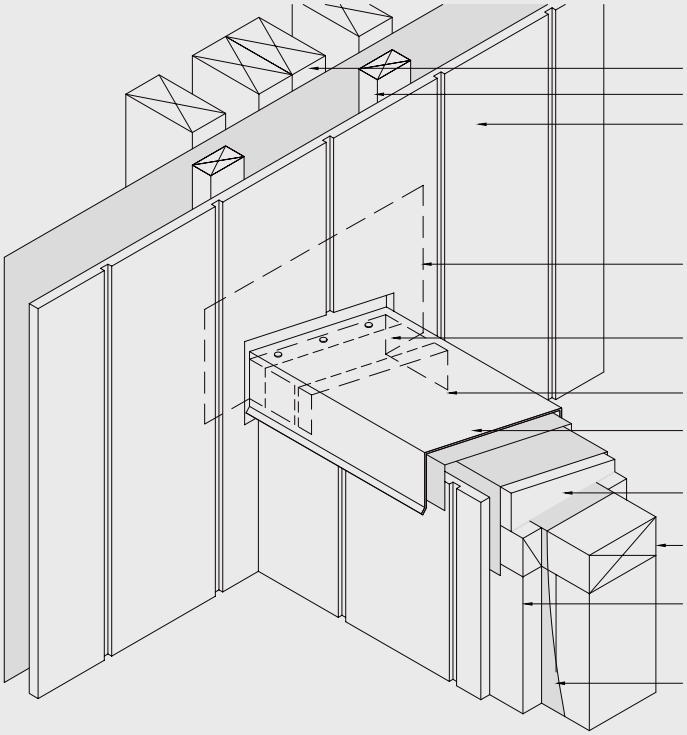

Note:
1. Treat all cut edges with Soudal® Metalex® Clear

SC056: Shadowclad Junction with Wall for Cantilevered Deck (Cavity)

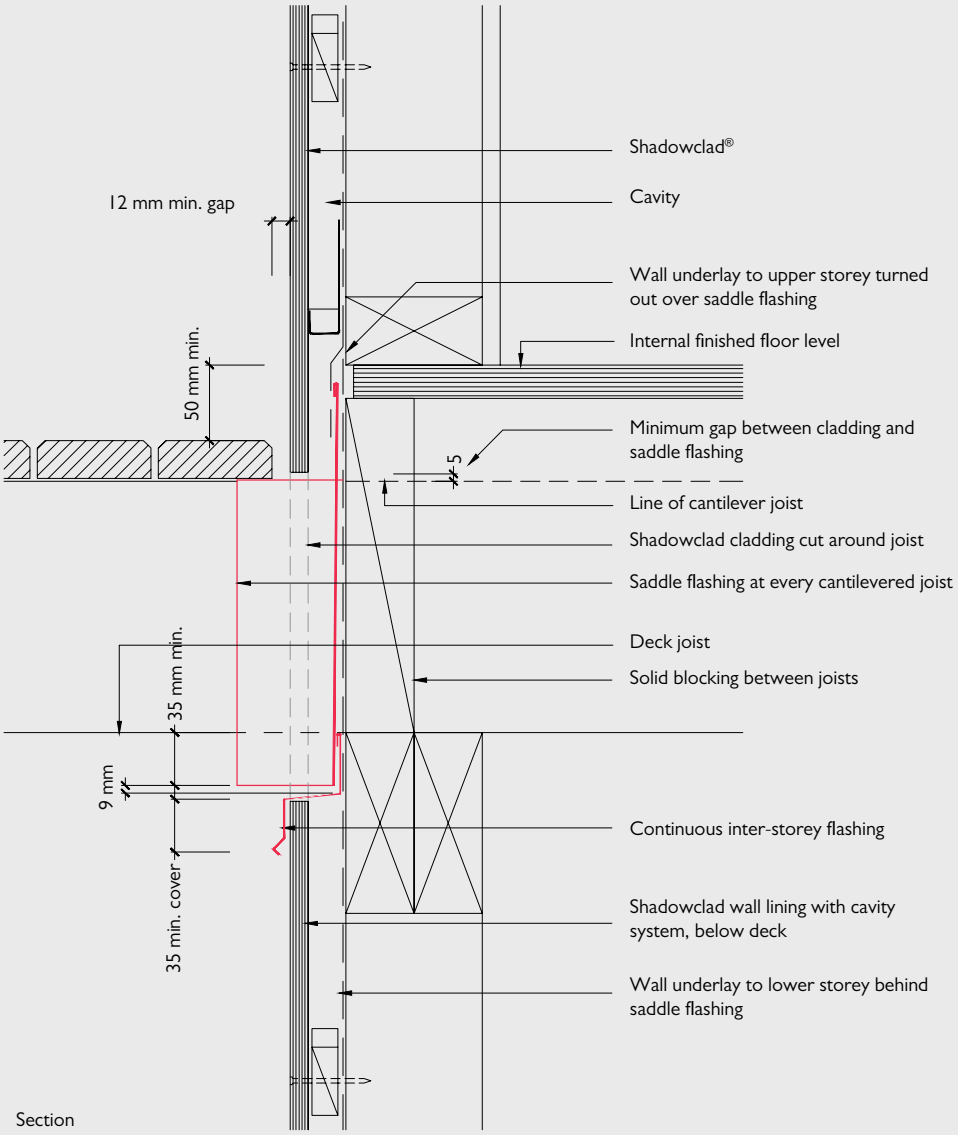

Section

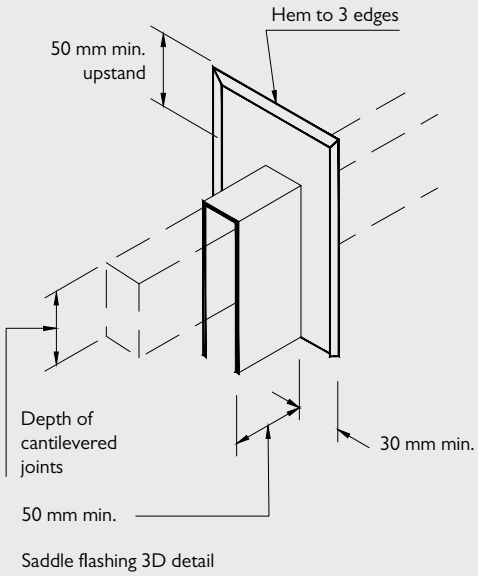

Saddle flashing 3D detail

Note:
1. Building wrap at back of cavity shall be taped around joist penetration
2. The back of the saddle flashing shall be positioned behind the cladding
3. Saddle flashing terminates over inter-story flashing
4. Treat all cut edges with Soudal® Metalex® Clear

SC058: Shadowclad Detailing for Enclosed Balustrade (Cavity)

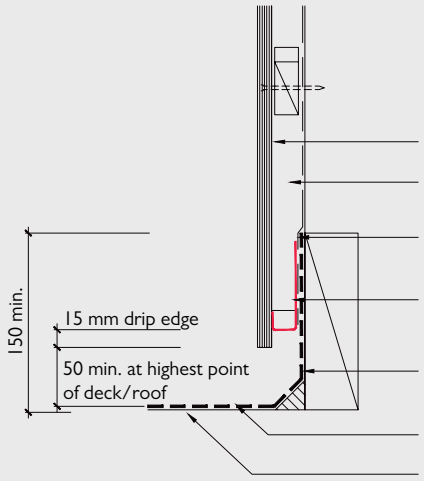

Shadowclad®

Cavity

Wall underlay dressed over deck membrane upstand

75 mm minimum upstand cavity base closure vent strip. Position to give 15 mm drip edge to cladding

Fully supported membrane upstand

Deck membrane

Deck structure

Note:
1. Cut edges should be placed at the top of the sheet to avoid rain drips soaking into cut end grains
2. Treat all cut edges with Soudal® Metalex® Clear
3. Priming the bottom edge and back (rear) of the sheets to a height 150 mm is required

5.0 COATING & APPLICATION – EXTERIOR CLADDING

5.1 SURFACE PREPARATION

- Shadowclad is manufactured, treated and stored in dry conditions at CHH Ply manufacturing facilities.
  The H3 treatment provides temporary repellence to mould prior to on site coating, however it remains the applicators responsibility to ensure the surface is dry and free from dust and mould prior to coating.
- If Shadowclad has been exposed to external weathering for over 3 months wash surfaces with a mild detergent solution to remove any dirt, dust, mould or sea spray prior to coating.
- If recoating, remove loose, flaking or unsound coatings and wash walls prior to recoating.
- The Shadowclad surface must be dry prior to applying any surface coating.

5.2 COATING APPLICATION

- If sheets feel greasy to touch, separate and place in a dry, well ventilated area to allow any residual solvents from the treatment process to flash off prior to applying coatings.
- **Shadowclad is envelope preservative treated. Where sheets are cut, cut edges must be coated with a brush on timber preservative in accordance with the relevant manufacturer's instructions. Soudal® Metalex® Clear is recommended. Failure to properly apply preservative to cut edges will negatively affect the durability of cut panels.**
- Coatings should be applied by brush to ensure adequate coating film build is achieved. Application via roller or spray is not recommended.
- Shadowclad Natural panels should be coated within 3 months of installation.
- Priming of sheet edges and on the rear of the sheet to a height of 150mm is considered good practice, and required at the base of all sheets including above window and door joinery and horizontal flashings.
  - Shadowclad Ultra sheets are coated on the rear to a height of 150mm (minimum) to meet this requirement.
- A minimum total coating system film build of 90 microns is recommended when painting or using film forming stains, including a minimum 30 micron thickness per coat, being mindful of achieving an adequate coating in the decorative grooves.
- For detailed advice on surface preparation, coating product suitability and general coating practice always refer to the coating manufacturer prior to application.

5.3 COATING SELECTION

The following coating information should be treated as a generic guide to coating systems typically used with Shadowclad exterior cladding. The selection, application and maintenance of coatings is the responsibility of building owners and the professionals that they engage. For advice on specific coating products and their suitability for use on Shadowclad always refer to the coating manufacturer.

It is important to note regardless of the cladding materials selected there will always be a level of coating maintenance required to ensure the cladding material is sufficiently protected from the elements and maintains the desired appearance.

Paints & Film Forming Stains

Three coats (1 undercoat, 2 top coats) of a good quality, 100% acrylic paint system with a light reflectance value (LRV) of 50% or greater (i.e. light colours) which is regularly maintained will provide the highest level of protection and durability for Shadowclad and is likely to require the least amount of coating maintenance over the life of the cladding.

Dark colours (LRV of below 50%) increase heat and stress on the panel surface, reducing the panels overall lifespan and increasing the level of coating maintenance required to maintain an acceptable visual appearance. For this reason CHH does not support the use of dark colours on Shadowclad exterior cladding.

Some film forming stains (i.e. coatings with the consistency of paint but with an appearance similar to penetrating stains) may offer similar protection qualities to paints however advice and assurance should be sought from the coating manufacturer as to their suitability for use with Shadowclad prior to application.

Where paints or film forming stains are to be used, Shadowclad Ultra is recommended. Shadowclad Ultra features a factory applied performance coating which in most cases eliminates the use of time consuming wet primers. (Refer Table 10).

Shadowclad Natural can also be used with paint however a conventional wet primer is required as part of the coating manufacturers overall system specification.

Penetrating Stains

Penetrating stains show the natural texture and character of timber and are widely used on Shadowclad exterior cladding. Penetrating stains offer less protection for panels from exterior weathering than paints and film forming stains which are considerably thicker in surface film build. Due to their translucency, penetrating stains are likely to require additional coating maintenance during the panel's life to maintain an acceptable visual appearance. Penetrating stains should only be used on Shadowclad Natural and are not recommended for use on Shadowclad Ultra.

CHH Ply does not recommend the use of linseed oil based coating which have the potential to promote mould growth in this product.

Clear Coatings & Uncoated Shadowclad

If Shadowclad is left uncoated or is clear coated in exterior applications the long term aesthetics of the board will be significantly reduced. While the product will meet durability and weather tightness requirements under E2/AS1 a high visual appearance will not be achieved in the long term.

Face Checking

Face checks are lengthwise separations of wood fibres in the face veneer of the plywood. They result from the normal swelling and shrinking of wood as it gains and loses moisture which is exacerbated by darker colours. It is important to realise that these checks are superficial, being confined to the face veneer. They do not alter the structural integrity of the plywood in any way. If you are the specifier, it is important to discuss these issues with your client before finalising colour choice. If checking occurs, repaint with a good quality, 100% acrylic exterior house paint in accordance with the manufacturer's instructions, thoroughly working paint into the face checks with a paint brush.

Table 10: Coating System for Shadowclad Ultra

Within 3 Months of Erection	**Ensure the panel is clean and dry prior to top coating. Top coat with two coats of premium 100% acrylic exterior house paint.**
OR	
Within 3 to 6 Months of Erection	**Wash the surface with a mild detergent solution to remove any chalky material prior to top coating. Top coat with two coats of premium 100% acrylic exterior house paint.**

Note: For best results.

i/ allow 24 hours between coats.

ii/ use a light coloured paint system, LRV above 50%.

iii/ Recommend panel be washed down prior to painting to remove any sea salt spray or dirt deposits.

iv/ Minimum total coating film build of 90 microns is recommended, including a minimum 30 microns per coat.

5.4 COATING REQUIREMENTS IF RUN OFF IS USED FOR DRINKING WATER

Chemical manufacturers recommend that any run-off from treated surfaces should not be used for drinking water. Unsealed (e.g. unpainted) plywood claddings should not be used in situations where run-off directly from such claddings is collected in water tanks for drinking water. Ensure selected coatings act as a sealant and refer to the coating manufacturer's Safety Data Sheets to confirm specified coatings are suitable for use in these applications.

6.0 MAINTENANCE

All cladding materials, including Shadowclad, require careful and regular product maintenance by the building owner throughout the cladding's normal service life to ensure long term durability and to maintain visual aesthetics.

Maintenance is the responsibility of the building owner. CHH will not be responsible for rectifying issues arising from a failure to carry out required maintenance in accordance with the guidance below.

Claddings:

At a minimum, Shadowclad should be maintained by:

- Regularly washing it down (at least annually) with a mild detergent or solution to remove surface dirt, moss, mould, and sea spray.
- Inspect on at least a yearly basis paying particular attention to sheet joints, corners and bases.
- Keep dirt, soil or leaf build-up at least 150mm away from the base of panels.
- Clean spouting and downpipes as required, so that stormwater is not overflowing onto the cladding.
- Repaint as soon as the first sign of coating deterioration is identified in accordance with the coating manufacturer's specifications (including edges and sheet bottoms).
- Panel recoating requirements may vary depending on climate, orientation to the sun, coating type and coating colour selected.
- Maintain the exterior envelope and connections including joints, penetrations, flashings, heat pumps, and sealants that may provide a means of moisture entry beyond exterior cladding to comply with the requirements of the NZBC Clause E2 - External Moisture.
- Prune back vegetation which is close to or touching the building as well as ensuring the NZBC ground clearance requirements are maintained especially where gardens are concerned.
- **Do not** use water blasters to wash down the cladding.

Flashings:

- Flashings should be periodically cleaned on a similar basis to the glass in windows.
- Clean Shadowclad flashings with a diluted solution of mild liquid detergent avoiding excessively hot solutions. Use a soft bristle brush. **Do not** use abrasive tools or cleaners on the coating.
- After cleaning, rinse thoroughly with fresh water. **Do not** use strong solvent type cleaners. Where the use of solvents is required, such as cleaning paint spills, use nothing other than methylated spirit. Ensure contact time is as short as possible, and rinse the solvent cleaner thoroughly from the surface with copious amounts of quality drinking water.
- Where cavity base closures are installed, ensure drainage holes are kept clear.

Also, refer to the Shadowclad Information Bulletin: Shadowclad Maintenance March 2021.

7.0 FREQUENTLY ASKED QUESTIONS

Q: Where can Shadowclad be used?
A: Shadowclad can be used as both exterior cladding or as an internal lining (moisture free areas only). For interior linings untreated Shadowclad should be used. For exterior cladding H3 treated Shadowclad is required.

Q: Do I have to re-treat cut edges of Shadowclad panels?
A: H3 treated Shadowclad is envelope preservative treated. All cuts made in treated plywood **must** have a brush on preservative treatment applied fully to the cut area. CHH Ply recommends the use of Soudal® Metalex® Clear.

Q: When used as an exterior cladding what are the durability expectations of Shadowclad?
A: Under the NZBC Shadowclad (when used as an exterior cladding) is required to meet a 15 year minimum durability level.

To achieve a 15 year durability Shadowclad must be:

- H3 preservative treated.
- Uncoated Shadowclad will meet the durability and weathertightness requirements, but a high visual appearance will not be achieved in the long term.
- Coated with a good quality penetrating stain, film forming stain or paint system.
- Coatings must be regularly maintained as part of a normal building maintenance program throughout the life of the building.

Shadowclad is not recommended to be left uncoated when used as an exterior cladding.

Note – durability according to the NZBC refers to the products ability to continue to perform its primary function as protection for the building structure. Appearance including the performance of the coating product is not covered under the NZBC durability requirements.

Q: Can Shadowclad, when used as an exterior cladding, be coated in dark colours?
A: While dark colours (coatings with an LRV of below 50%) will achieve a 15 year durability however customers must expect an increased level of recoat and general product maintenance compared to where light coating colours are used. For this reason CHH does not support the use of dark colours on Shadowclad exterior cladding.

The greatest level of cladding protection and least amount of coating maintenance can be achieved by using a good quality paint system (applied as per the coating manufacturers specifications) with an LRV of 50% or greater and a minimum total coating system film build of 90 microns, including a minimum 30 micron thickness per coat. For further information on coatings always refer to the applicable coating manufacturer's specification material.

Q: Does Shadowclad comply with the NZBC Requirements?
A: Shadowclad has been tested in accordance with E2/VMI and AS/NZS 4284 "Testing of Building Facades" for compliance with the NZBC requirements and has been BRANZ appraised for use in cavity fix construction.

Q: In the Shadowclad exterior flashing range can I colour the flashings to match the colour of my building?
A: Shadowclad aluminium exterior flashings are available in either anodised or mill finishes. Anodised flashings are silver in colour and can be installed immediately. Mill finished flashings can be powder coated to specific colours by the customer.

Q: Does face checking affect the performance of Shadowclad?
A: Face checks are lengthwise separations of wood fibres in the face veneer of the plywood. They result from the normal swelling and shrinking of wood as it gains and loses moisture which is exacerbated by darker coloured coatings. These checks are superficial, being confined to the face veneer. They do not alter the structural integrity of the plywood in any way.

Q: Where can I download the Shadowclad Installation APP?
A: The Shadowclad Installation APP can be downloaded from www.chhply.co.nz/site-app or the respective device APP procurement marketplace.

Q: Where can I get a Shadowclad Stick from?
A: Shadowclad Sticks may be ordered by contacting CHH Ply direct by phoning 0800 326 759 or ordering via the Shadowclad APP, the Shadowclad website: www.shadowclad.co.nz, or contacting your local merchant.

8.0 GLOSSARY OF TERMS

Sealant: A flexible neutral cure sealant for filling of spaces/ gaps and weatherproofing that complies with NZBC Acceptable Solution E2/AS1, or sealant covered by a valid BRANZ Appraisal for use as a weather sealing sealant for exterior use. It is the designers' and builders' responsibility to ensure that sealants are fit for purpose and compatible with Shadowclad products and any other building materials or components used within the Shadowclad installation.

Air Seal: A continuous seal fitted between a window or door reveal and the surrounding wrap and associated tape enclosing wall framing to prevent the flow of air into the building interior. Air seal must be weathertight so that moisture is not able to access the structure. Refer to NZBC E2/AS1 for further detail.

Foam Bond Breaker: A tape that is polyethylene backed that prevents "3-Point" adhesion mating surfaces that ensures that the sealant only attaches to two surfaces (and not the third which would create an anchor point preventing the sealant moving as its designed to).

PEF Rod: A foam formed polyethylene "noodle" that is designed to be inserted between two surfaces. Should have a 25-33% larger diameter than the gap/space you are inserting it into.

Soudal® Metalex® Clear: A supplementary preservation treatment that preserves the treatment envelope of timbers with a Class H3.1 and above.

9.0 REFERENCES & SOURCES OF INFORMATION

- New Zealand Building Code (NZBC).
- AS/NZS 2269:2012 "Plywood Structural".
- AS/NZS 1604.3:2010 "Specification for Preservative Treatment, Part 3: Plywood".
- NZS 3602:2003 "Timber and Wood-Based Products for use in Buildings".
- AS/NZS 4284:2008 "Testing of Building Facades".
- NZS 3603:1993 "Timber Structures Standard".
- NZS 3604:2011 "Timber Framed Buildings".
- AS 3715:2002 "Metal Finishing – Thermoset powder coating for architectural application of aluminium and aluminium alloys".
- NZBC Clause E1 Surface Water.
- NZBC Acceptable Solution, E1/AS1.
- NZBC Clause E2 External Moisture.
- NZBC Acceptable Solution, E2/AS1.
- NZBC Clause E3 Internal Moisture.
- NZBC Acceptable Solution, E3/AS1.
- NZBC Clause B2 Durability.
- NZBC Acceptable Solution, B2/AS1.
- Product Technical Statement.
  – Shadowclad® for Cavity Construction.
- Ecoply® Specification and Installation Guide.
- Ecoply® Barrier Specification and Installation Guide.
- CHH Ply technical notes – downloadable from www.chhply.co.nz/librarytools/.
- Safety Data Sheet.
  - SDS Shadowclad Azole Treated Plywood.
  - SDS Shadowclad CCA Treated Plywood.
  - SDS Stainless Steel flashings.
  - SDS Aluminium flashings.
  - SDS Shadowclad Ultra CCA Pre-primed Treated Plywood.
  - SDS Shadowclad Ultra LOSP Pre-primed Treated Plywood.
- Producer Statement – Compliance for Surface Treated Aluminium Products.
- Window Association of New Zealand (www.wanz.org.nz).
- APA (www.buildabetterhome.org).
- EWPAA (www.ewp.asn.au).
- BRANZ Appraised 764 – Shadowclad® Cavity Fixed Cladding System.
- BRANZ Recommendations for Building Maintenance.

Standards can be purchased online at www.standards.co.nz.

Building Code Compliance Documents can be downloaded free of charge at www.building.govt.nz/building-code-compliance/.

Line drawings within this literature can be downloaded from www.chhply.co.nz/librarytools/.

10.0 LIMITATIONS

The information contained in this document is current as at February 2021 and is based on data available to CHH Ply at the time of going to print.

All photographic images are intended to provide a general impression only and should not be relied upon as an accurate example of Shadowclad products installed in accordance with this document or the NZBC compliance documents.

This publication replaces all previous CHH Ply design information and literature relating to Shadowclad structural plywood products and flashings installed using a drained and vented cavity. CHH Ply reserves the right to change the information contained in this document without prior notice. It is your responsibility to ensure that you have the most up to date information available, including at the time of applying for a building consent. You can call toll free on 0800 326 759 or visit www.chhply.co.nz to obtain current information.

CHH Ply has used all reasonable endeavours to ensure the accuracy and reliability of the information contained in this document. However, to the maximum extent permitted by law, CHH Ply assumes no responsibility or liability for any inaccuracies, omissions or errors in this information nor for any actions taken in reliance on this information.

11.0 SHADOWCLAD STICK USER GUIDE

CHH Ply developed the Shadowclad Stick, an installation tool for Shadowclad, to remove the need for builders to develop their own 'jigs' and ensure that critical clearances, nail spacings, etc. are applied during the installation of Shadowclad sheets.

The Shadowclad Stick does not replace the need to follow good building practice and the requirement to read and understand the Shadowclad Specification & Installation Guides and the NZBC.

11.1 THE COMPONENTS OF THE SHADOWCLAD STICK

The Shadowclad Stick has been developed specifically to deal with expansion gaps, catering for both Shadowclad texture and Shadowclad groove as well as horizontal and vertical joints. The Shadowclad Stick also provides guidance around nail spacings to suit:

- 150 mm spacing around sheet edges and 300 mm to intermediate studs and nogs;
- 75 mm distance for the bottom of the sheet; and
- 20 mm for the top of the sheet.

Figure 1: The Shadowclad Stick

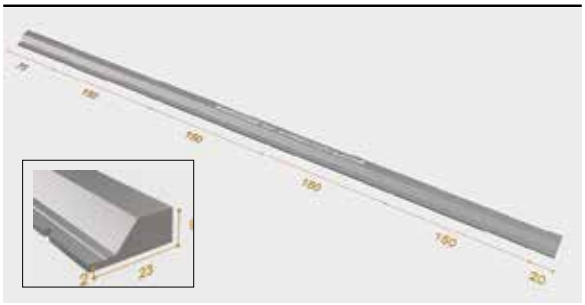

11.2 VERTICAL JOINTS

The Shadowclad Stick is contoured to be 2 mm thick on one edge and 9 mm thick on the other. At 695 mm long, the Shadowclad Stick can be placed in the middle of sheets to provide minimum clearance requirements. Figure 2 illustrates the 2 mm expansion gap required for Shadowclad texture together in use with the Shadowclad Stick. Figure 3 illustrates the 9 mm expansion gap required for Shadowclad Groove, together in use with the Shadowclad Stick.

Figure 2: Shadowclad Texture - 2 mm Vertical Expansion Gap

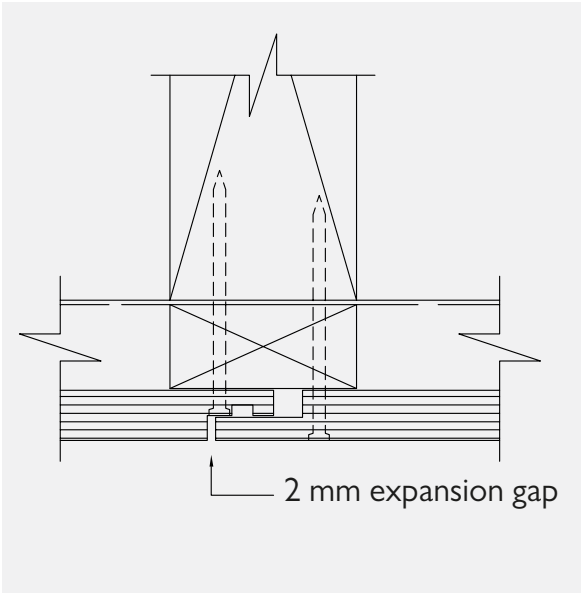

Refer to SC006 for the installation detail

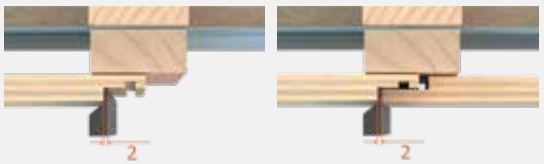





Figure 3: Shadowclad Groove - 9 mm Vertical Expansion Gap

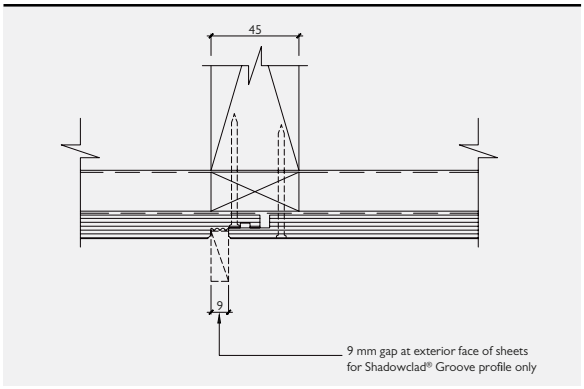

Refer to SC008 for the installation detail

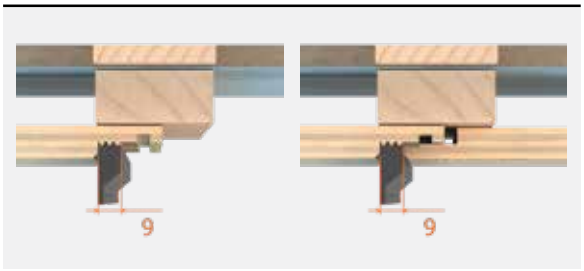

The 2 mm thick edge of the Shadowclad Stick can also be used to measure the 2 mm expansion gap required between vertical flashings and Shadowclad as detailed in Figure 4 (Vertical Top Hat Flashing and 'W' Flashing similar).

Figure 4: 2 mm Vertical Expansion Gap on Shadowclad External Box Corner

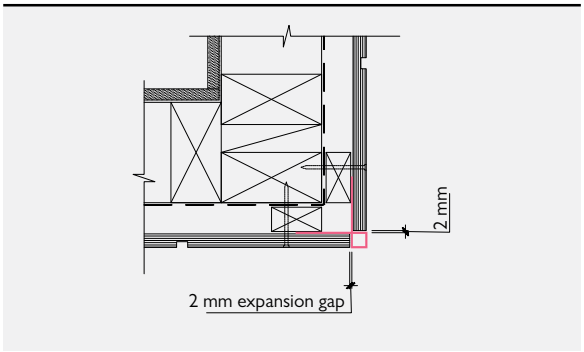

Refer to SC020 for the installation detail

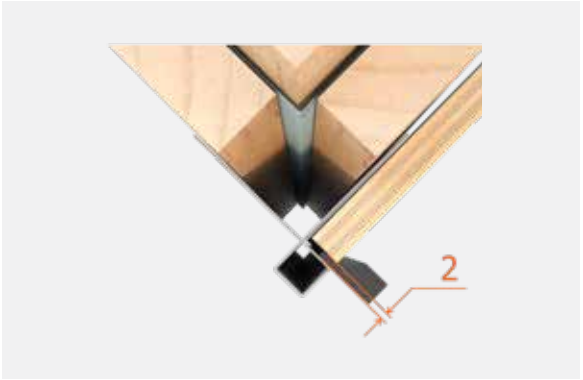

11.3 HORIZONTAL JOINTS

The 9 mm thick edge on the Shadowclad Stick can also be used to provide the appropriate clearance between the top of the horizontal flashings and bottom of sheets as detailed in Figure 5 (Window head and metre box similar) as noted in the detail SC016.

Figure 5: Shadowclad 9 mm Gap at Horizontal 'Z' Flashing

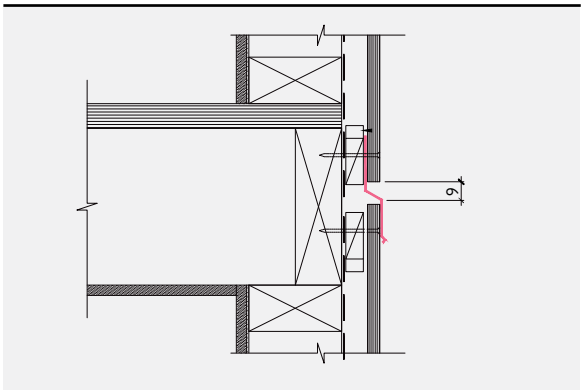

Refer to SC016 for the installation detail

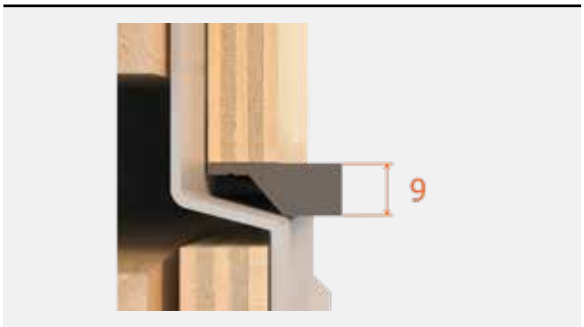

11.4 FASTENER LOCATIONS

The Shadowclad Stick has been detailed to support the correct placement of fastenings corresponding to the Shadowclad Specification & Installation Guides.

11.5 NAIL SPACING'S

Section 4.7 notes "Standard fixing pattern: fasten sheet edges at 150mm centres and within the panel on all supports at 300mm centres". Figure 6 details the use of the Shadowclad Stick at sheet edges with 150 mm nail spacing provided for between half rounds spaced at exactly 150 mm centres. Figure 7 details the use of the Shadowclad Stick at the centre of the sheet to provide fixings at 300 mm centres, whilst figure 8 provides a pictorial representation of the Shadowclad fastener layout.

Figure 6: Sheet fastening around sheet edges at 150 mm

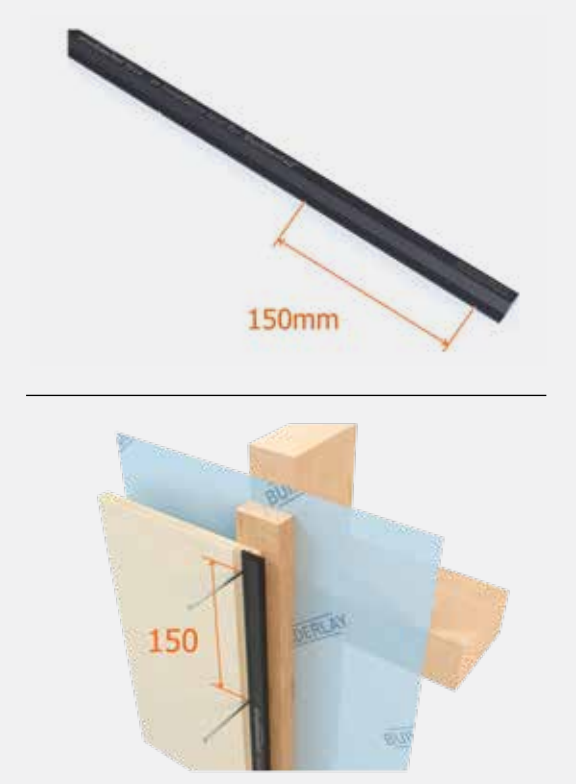

Figure 7: Sheet fastening within the panel at 300 mm



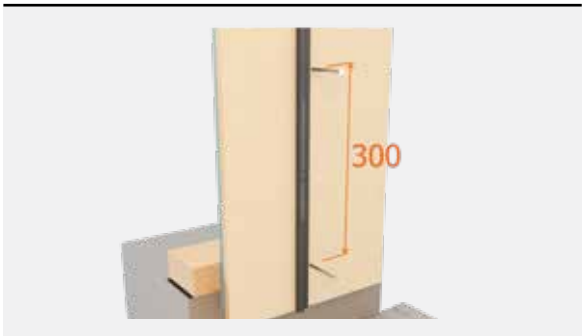

Figure 8: Pictorial representation of nail spacings for sheet edges and intermediate supports

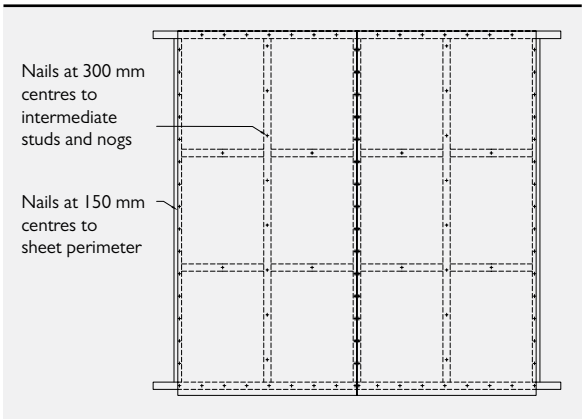

11.6 NAILING OF THE SHIP LAP

Nailing of the ship lap is an important step in ensuring the Shadowclad system's weathertightness. Each Shadowclad sheet is independently nailed off to allow for expansion and contraction of the sheets over their service life, whilst maintaining a weathertight connection. The Shadowclad Stick has two distinct locating devices for the ship lap joint. Figure 9 illustrates the location of the ridge, exactly 13 mm from the edge of the Shadowclad Stick, in combination with the diameter 3 mm half round provides the exact location for nails within the underlap portion of the ship lap. The ridge should be lined up with the edge of the underlap edge of the sheet. Figure 10 details the use of the Shadowclad Stick in this application.

The Shadowclad Stick is exactly 23 mm wide as detailed in Figure 11. To ensure that the Shadowclad sheets are fixed independently of each other, the top of the ship lap should be fixed 23 mm from the edge. The Shadowclad Stick should be placed along the sheet and nailed at 150 mm centres as detailed in Figure 12.

Figure 9: Shadowclad Stick 13 mm dimension

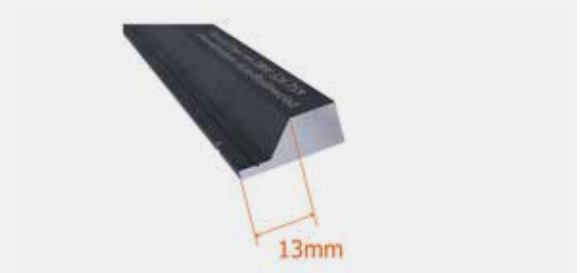

Figure 11: Shadowclad Stick 23 mm dimension



Figure 12: Shadowclad Stick and ship lap nailing

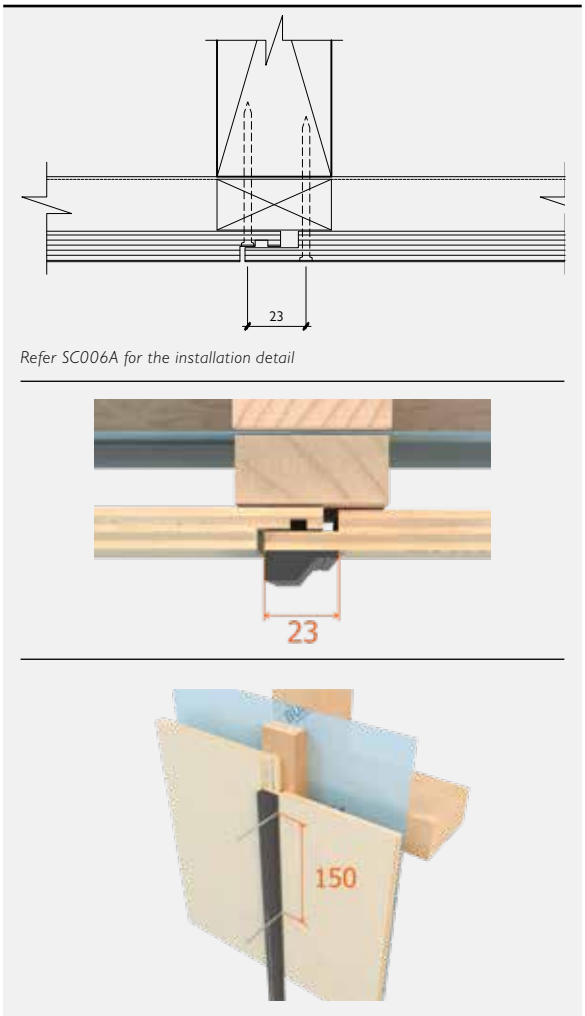

Refer SC006A for the installation detail

11.7 END DISTANCE FASTENER LOCATIONS

Compliance with the end distance nailing is an important step in achieving the weathertight solution. The Shadowclad Stick has two end of sheet identifiers, including a 75 mm edge distance from the bottom of the Shadowclad Stick to the first nail locator as detailed in Figure 13. The top of the Shadowclad Stick has a 20 mm end distance from the top of the Shadowclad Stick to the first nail locator, to suit nailing of the top of the sheet to the centre of the top plate, as detailed in Figure 14.

11.8 END DISTANCE FASTENER LOCATIONS

Compliance with the end distance nailing is an important step in achieving the weathertight solution. The Shadowclad Stick has two end of sheet identifiers, including a 75 mm edge distance from the bottom of the Shadowclad Stick to the first nail locator as detailed in Figure 13. The top of the Shadowclad Stick has a 20 mm end distance from the top of the Shadowclad Stick to the first nail locator, to suit nailing of the top of the sheet to the centre of the top plate, as detailed in Figure 14.

Figure 13: 75 mm end distance

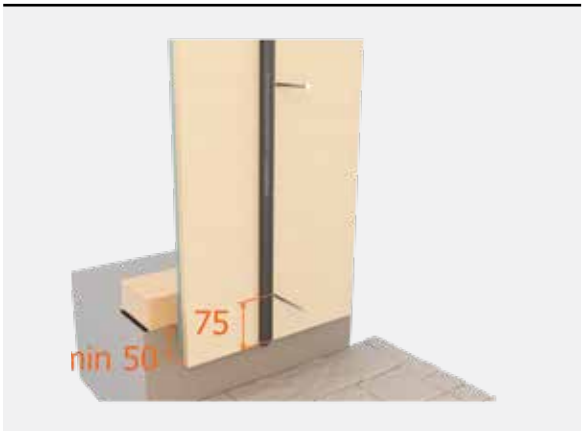

Refer to SC042 for the installation detail

Figure 14: 20 mm end distance



11.9 SHADOWCLAD SPECIFICATION & INSTALLATION GUIDE & SHADOWCLAD APP

The Shadowclad Stick has been developed to compliment the Shadowclad Specification & Installation Guides and the Shadowclad APP all of which are available to download from www.shadowclad.co.nz.

SHADOWCLAD KEY INSTALLATION & DESIGN POINTS

EXTERIOR CLADDING APPLICATIONS

The following tasks are provided to installers to point out key installation and design factors when used as an exterior cladding. These do no detract from the requirements to read and understand this literature as a whole.

Task	Tick when checked
Prior to Specification and Installation	
Read the Shadowclad Specification and Installation Guide in its entirety	☐
Framing Plan	
Framing setout drawings to suit Shadowclad fixing and installation guidelines	☐
Sheet Cuts	
Coat all sheet cuts with a preservative timber treatment such as Soudal® Metalex® Clear	☐
After applying Soudal® Metalex® Clear, apply the surface coating (e.g. paint or stain) to cut edges	☐
Place uncut edge to bottom	☐
Fastener Material Type	
Galvanised fasteners or better used (Stainless steel annular groove nails required in sea spray zones and with H3.2 CCA treated Shadowclad Ultra)	☐
Sheet Fastener Pattern	
Around sheet edge – maximum 150mm centre spacing	☐
Within sheet body – maximum 300mm centre spacing	☐
Horizontal Sheet Joints	
Minimum 9mm separation gap between sheets above all Horizontal 'Z' flashings	☐
Prime the bottom of the sheet edge and 150mm up the back (rear) of the sheets	☐
50 mm strip of neutral cure silicon sealant or stop ends at all 'Z' flashing terminations excluding terminations at Shadowclad metal corner flashings	☐
Back flashings or 150 mm overlap to all flashing butt joints	☐
Expansion Gaps Between Sheets (Vertical Sheet Joints)	
Texture Profile Sheets - 2mm gap between vertical edges of sheets	☐
Groove Profile Sheets - 9mm gap (i.e. full groove space) between vertical edges of sheets	☐
Note: Expansion gaps required between vertical edges of sheets to accommodate natural expansion and contraction of sheets	
Ground Clearances	
Paved/Sealed Ground - minimum 100mm distance from the ground to sheet bottom	☐
Broken Ground - minimum 175mm distance from the ground to sheet bottom	☐
Prime the bottom of the sheet 150mm up the back (rear) of the sheet	☐

Refer to the current Shadowclad Specification and Installation Guide for full installation specifications and suggested details.

shadowclad®

BRANZ Appraised
Appraisal No.784 [2017]



CHH PLY

Private Bag 92102
Victoria Street West
Auckland 1142
New Zealand

Freephone: 0800 326 759
Freefax: 0800 746 400

www.chhply.co.nz

March 2021
SHADOWCLAD_V2.0321

JAS-ANZ

PRODUCT CERTIFIED paa ENGINEERED WOOD

ewpaa

NEW ZEALAND MANUFACTURED

Thermakraft™



Thermakraft
ONE WRAP SYSTEM
10 Products - One system
One warranty

Installation Guide

ALUBAND

Bituminous adhesive flexible window flashing tape.

Aluband is designed specifically as a premium window flashing tape and forms part of the Thermakraft One Wrap System. Made with a heavy bituminous adhesive, the product provides high strength bond and excellent abrasion resistance.

Product usage

Aluband Window Flashing Tape is installed into and around frame joinery opening over the wall underlay and exposed frame to cover both the face and edge of the opening framing as a secondary weather resistant barrier. It can also be installed at joinery heads to seal flashing upstands to the wall underlay.

Smarter products. Better buildings.
thermakraft.co.nz

BRANZ Appraised
Appraisal No.878 [2019]

Installation Guide

Application Method

- Cut the wall underlay/air barrier at a 45° angle away from each corner. Fold flaps tightly into the window or door opening and fix with staples on the back faces of the framing.
- Fix the Thermakraft Corner Moulded Piece to the bottom corners by way of staples or clouts to the two jambs. Always ensure that Aluband is applied to surfaces that are clean and free of dust, contaminates, solvents, oils or waxes. Note the following: 150mm wide tape is used for 100mm wide window or door framing, and the 200mm wide tape is used for 140mm to 150mm wide reveals. (With steel framed houses use Double Sided Tape to attach the Thermakraft Aluband Corner Moulded Piece to metal framing).
- Measure 200mm up both jambs, add 400mm to the length of the window sill and cut to suit that measurement.
- First remove the release film from the tape; align the back edge of the tape with the inside edge of the sill.
- Using the Thermakraft Tool, firmly press the tape onto the wall underlay to ensure good adhesion and ensure the tape is fitted tightly into the jamb to sill corners.
- At the sill/jamb corners cut the tape from the external edge of the frame outwards. Fold flaps back onto the wall underlay/air barrier and press tape firmly for good adhesion.
- Proceed to fit the Window Flashing Tape to the top corners of the frame (200mm across lintel x 200mm down jamb).
- For window or door lintel to jamb junction, apply a butterfly using the 75mm wide x 100mm long Aluband. Fix at a 45° angle to the jamb with an overlap at the corner of 3mm.
- Door frames are to be treated similarly to window openings. The sill may be either a timber or a concrete floor.
- Window Flashing Tape is used to seal the up stand of the window head flashing to the building underlay. (Refer to the cladding manufacturer's details).
- Aluband must NOT be left exposed to the weather or UV for more than 42 days.

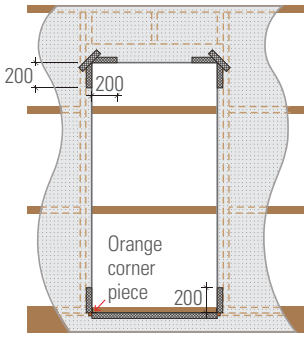

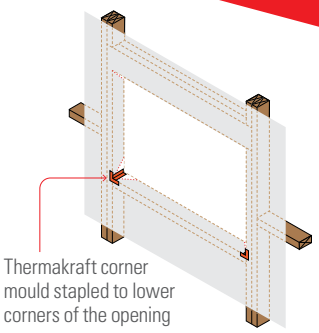

Window and door frames

- Staple orange corner piece to the bottom corner sill. Place tape 200mm up the jambs and across the full width of the sill opening. Align tape with the back of the frame opening.
- At the top corner place tape 200mm down the jamb and 200mm across the lintel. Place a strip of 75mm tape across the top corner.

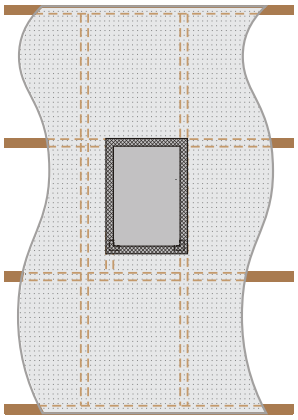

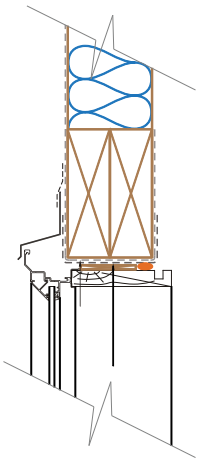

Application Tips

- Always use the Thermakraft Aluband Window Flashing Tool to apply firm pressure onto the tape during installation. This will ensure proper adhesion of the tape to the building underlay or other substrates.
- Install the Aluband Window Flashing above 5°C.
- Unaffected by LOSP or other solvent based treated timber. However, LOSP or other solvent based treated timber must have sufficient time for the solvent chemical to flash off in a well ventilated area. Recommended minimum 7 days.

Important Information

To assist the adhesion of Aluband window flashing tape, Thermakraft suggests the following two options this is particularly relevant in the following conditions:

- In temperatures below 5°C.
- When adhering to difficult to bond substrates such as rough/uneven surfaces.
- When the tape has been lifted or moved after initial application.

Installation Guide

Application of Heat:

- Press the window sill tape into position in the usual manner.
- Apply a gentle heat, using a heat gun on low heat to the top of the window sill tape.
- Once the adhesive starts to soften use the Thermakraft tool or a roller to firmly press the tape into the wall underlay ensuring good adhesion.
- Take care not to damage the foil face lining.

Difficult to Bond Substrates Surface Preparation:

- Always ensure that Aluband is applied to surfaces that are clean and free of dust, contaminates, solvents, oils or waxes.
- Application of Scotch® Super 77™ Spray Adhesive: When installing Aluband Flashing Tapes on difficult to bond substrates, Scotch® Super 77™ Spray Adhesive may be used. Ensure that the substrate is dry and free of dirt before applying the spray adhesive. Apply a light spray/coating of the spray adhesive onto the substrate. Wait for a minute to allow the spray adhesive to become tacky. When tacky to the touch apply the flashing tape in the normal manner.

Adhesives and Sealants:

- After the installation of Aluband window flashing tape, ensure that the edges do NOT come into contact with solvent based sealants or adhesives. Solvents in these products can adversely affect the adhesion or dissolve the bituminous adhesive and cause it to run.
- If the application of solvent based adhesives or sealants are necessary, cover the edges with Thermakraft joining tape or a true aluminium foil tape to form a barrier. With a true aluminium foil tape, the installer must test the bonding strength.
- The installer must check the compatibility of the Aluband window flashing tape with the sealant or adhesive product to ensure the components are fully compatible.

Handling and Storage

Aluband window flashing tape must be handled with care to prevent damage such as tearing, excessive puncture and roll deformation.

The product must be stored under cover well away from direct moisture, rainfall contact and sunlight (UV). Care should be taken not stack other materials on top of the product.

The recommendations contained in Thermakraft's literature are based on good building practice, but are not an exhaustive statement of all relevant information and are subject to any conditions contained in the Warranty. All product dimensions and performance claims are subject to any variation caused by normal manufacturing process and tolerances. Furthermore, as the successful performance of the relevant system depends on numerous factors outside the control of Thermakraft (for example quality of workmanship and design), Thermakraft shall not be liable for the recommendations in that literature and the performance of the Product, including its suitability for any purpose or ability to satisfy the relevant provisions of the Building Code, regulations and standards. Literature subject to change without notification. Latest documentation can be found on the website. E&OE.

Issue 4, January 2020

Design

GIB EzyBrace® Systems

Wall Bracing Calculation Sheet A

JUNE 2011

Box 1

Job Details (tick appropriate boxes)

Name	GINA UHINK		
Street Address	752 SETTLEMENT ROAD RAIWAKA		
Lot No		DPS No	
City/Town			

Location of Storey:		*Floor type:*		*Floor load:*	
Single/upper storey	✓	Sub-floor		2kPa	
Upper storey of two		Slab	✓	3kPa	
Lower storey of two					

Key dimensions			
Building height to apex		3.7	Metres
Roof height above eaves		1.5	Metres
Stud height		2.7	Metres
Average roof pitch		15	Degrees
Building Length	BL	12	Metres
Building Width	BW	8	Metres
Gross Plan Area	GPA	96	Sq Metres

Note: When the average roof pitch is over 25 degrees, use the eaves length and width to determine BL and BW

Cladding weight	(Light)	Medium	Heavy
Sub-floor			
Lower storey			
Upper or Single Storey			

Roof weight	(Light)	Heavy

Room in roof space	Yes	(No)

Box 2

Wind Zone

Action	Reference	Values available	Outcome
Wind Region	Figure 5.1	A, W	
Lee Zone	Figure 5.1	Yes, No	
Ground Roughness	Page 6	Urban, Open	
Site Exposure	Page 7	Sheltered, Exposed	
Topographic Class	Tables 5.2 and 5.3 + Fig 5.2	Gentle to Steep	
Wind Zone	Table 5.4	L, M, H, VH, EH, SED	

Box 3

Earthquake Zone

Action	Reference	Values available	Outcome
Earthquake Zone	Figure 5.4	1, 2, 3, 4	1
Site subsoil classification	Page 9	A, B, C, D, E	

Box 4

BUs required Wind

W Across			40	BUs per m
W Along			45	BUs per m

(From NZS 3604:2011 tables 5.5, 5.6 and 5.7)

Total Wind Load

	Enter BL from box 1	Multiply by	BUs per m Across	Equals Across W required
W Across	12	X	40	48.0

	Enter BW from box 1	Multiply by	BUs per m Along	Equals Along W required
W Along	8	X	45	360

Box 5

BUs required Earthquake

E = 3 | | BUs per m²

(From NZS 3604:2011 tables 5.8, 5.9 and 5.10)

Note: For a room in the roof space use E + 3 BU/m²

Total Earthquake Load

EQ Requirement Along and Across	Enter GPA from box 1	Multiply by	E	Equals E required
	96	X	3	288

Transfer to calculation sheet B

For manual calculations only

© Winstone Wallboards 2011. This page may be photocopied in its entirety for the purpose of carrying out bracing calculations. Winstone Wallboards Limited otherwise reserves all rights including the right to be identified as the owner of copyright in the works.

GIB EzyBrace® Systems

Wall Bracing Calculation Sheet B

JUNE 2011

Design

Along

WALL OR BRACING LINE		BRACING ELEMENTS PROVIDED			WIND		EARTHQUAKE	
1	2	3	4	5	6 W	7 W	6 E	7 E
Line Label	Minimum BUs Required	Bracing Element No.	Bracing Type	Length Element (m) L	Rating BU/m W	BUs Achieved (BU/m x L) W	Rating BU/m E	BUs Achieved (BU/m x L) E
A	180	1	BLI-H	.8m	64			
		2	BLI-H	.8m	64			
		3	GSI-H	2.4m	148	216		
B	100	4	GSI-N	1.2m	75			
		5	GSI-N	.8m	50	125		
C	180	6	GSI-N	3.6	224	224		
D								
E								

Totals Achieved		**W** achieved	565
From Sheet A	**Totals Required**	**W** required*	360
		W achieved must exceed W required*	

E achieved	
E required*	
E achieved must exceed E required*	

*** from Calculation Sheet A**

Across

WALL OR BRACING LINE		BRACING ELEMENTS PROVIDED			WIND		EARTHQUAKE	
1	2	3	4	5	6 W	7 W	6 E	7 E
Line Label	Minimum BUs Required	Bracing Element No.	Bracing Type	Length Element (m) L	Rating BU/m W	BUs Achieved (BU/m x L) W	Rating BU/m E	BUs Achieved (BU/m x L) E
M	120	7	GSI-N	3.0	185	185		
N	100	8	GSI-N	3.0	185	185		
O	120	9	GSI-N	1.6	98			
		10	GSI-N	1.2	74	172		
P								
Q								

Totals Achieved		**W** achieved	542
From Sheet A	**Totals Required**	**W** required*	480
		W achieved must exceed W required*	

E achieved	
E required*	
E achieved must exceed E required*	

For manual calculations only

*** from Calculation Sheet A**

25 June 2021

Client: Gina Utting
ginautting@gmail.com

WGL 21150

RE: On-site 'secondary' wastewater treatment / disposal system for a four-bedroom house and a sleepout at Lot 3, 760 Settlement Road, Hakaru.

Introduction

This document is to form part of building consent application for the relocation of a four-bedroom house and the construction of a sleepout (with toilet and shower) at 760 Settlement Road, Hakaru. Lot 3, DP 560279 (3991 m^2). Title and floor plan attached.

This report outlines the design and technical specifications for the on-site wastewater treatment and disposal system and ensures the chosen wastewater system meets all the relevant requirements from the Proposed Regional Plan for Northland, section C.6.1 (PRPN), Kaipara District Council as outlined in AS/NZS 1547:2012 and G13/VM4 of the NZ building code.

Site Assessment

WGL visited the site on the 9 June 2021and made the following observations:

- Lot 3 is a flat site with a gentle slope to the north.
- The proposed effluent site is to be located at the western (settlement road side) boundary of the section.
- A hand auger investigation was undertaken within a potential effluent field site. Ground cover is grass with some mature trees immediately adjacent to the boundary.
- No obvious signs of instability were noted.
- No evidence was seen or heard of the site being used for activities which could have led to site contamination.

Geology

The GNS geological unit QMAP shows the soils at the proposed site of the effluent field as being alluvium of the Tauranga Group. A geotechnical report for subdivision was undertaken by Wiley Geotechnical Ltd in May 2020 (report 20034). This report deems the soils to be "light clays" and Category 5 in terms of AS/NZS 1547 2012 with a DiR of 3.0 mm/day. Our borehole investigation was consistent with this with a dark brown topsoil to 250mm underlain by a light brown silt.

Design Recommendations: Re AS/NZS 1547 2012

Four-bedroom house equates to a six-person occupancy, and a sleepout with a toilet and shower equates to a 2-person occupancy. (6 + 2 = 8).

The house is to have roof collection of potable water and standard water fixtures installed in the house including an automatic washing machine, daily effluent amounts to 180L/day/person, typical for a relocated house (table H3). Total daily wastewater for the house to be treated is 6 x 180L/day = 1080L/day.

The sleepout is to have standard water reduction fixtures including a dual flush cistern, shower flow restrictors, aerator faucets and a front-loading washing machine daily effluent amounts to 145L/day/person (table H3). Total daily wastewater to be treated is 2 x 145L/day = 290L/day

Total daily wastewater = 1080 + 290 = 1370L/day.

1,370L/day/3.0= 457 m2 **Effluent Field = 457 m².**

The owner has decided to install a 'Biocycle 8200' secondary wastewater an aerated filter wastewater treatment plant using a submerged fixed growth filter system. The Biocycle 8200 is manufactured and distributed by Biocycle Ltd, Hamilton. Manufacturers rated design capacity is 1400L/day and emergency storage 1600L. Technical specifications and OSET results are attached.

The effluent field is to be mole ploughed into the topsoil at a depth of at least 150mm. Where topsoil is less than 200mm extra topsoil will need to be added. A likely source of this extra topsoil is from the sleepout excavation. Effluent field is to be at least 1.5m off any boundary, 15m from any water body/course and 5m from any stormwater flow path downslope of the effluent field. The effluent field is to be installed on slopes under 10^0.

A reserve area is required to be made available in case of effluent field failure, the minimum size to be 30% of the effluent field size. **Reserve = 457 x 0.3 = 137, reserve = 137m².**

Stormwater to be discharged without attenuation as site coverage is less than 15%. Stormwater overflow from the rain water tanks to be taken to a dispersal trench downslope and north of the house. Final roof area of the house plus sleepout will be over 200m^2 but under 300m^2 and so length of in-ground trench to be 14m. See fig C21 attached. Any runoff from driveways should preferably be evenly spread across adjacent grass or into a grassed swale drain so as to abstract heavy metals and other pollutants before entering a watercourse. Piped discharge directly into a watercourse is not accepted these days as it adds to risk of pollution and to peak flood flow and scour of stream banks etc.

Key Environmental Effects

- **The Impact on <u>ground-water</u> *quantity*** from the system will be close to zero as no more water will arrive on the Lot as supply is roof-water, and effluent will be taken up by the grass on the effluent field and stimulate growth. Ground water *quality* will be protected by these taking up the nutrients (nitrates and phosphates) and by micro-organisms in the soil digesting any *e coli*.
- **The Impact on <u>surface-water.</u>** The amount of surface water run-off will be reduced by the increased vegetative growth. Some of the surface water will be taken up by the grass. The extra grass will provide a protective layer above the soils reducing erosion in times of heavy rainfall. The flow on effect is an improvement of **water quality** down-stream. Having some of the roof water applied to the effluent field on fine days will even out the application of water to the ground on the Lot, thereby tending to reduce peak flows to ground. This is a desirable effect.
- **The Impact on <u>soils</u>.** The effect on the soils will be beneficial as the nutrients will not only promote plant growth but also increase the micro-biological activity in the soils themselves and slowly convert any inorganic clays to organics. The topsoil depth will therefore increase over the years as the subsoils become more organic. Less topsoil can be washed away by heavy

rain as it is protected by the increased grass growth. The soils will benefit from the aeration from the installation of the dripper lines.

- **The Impact on Amenity Values.** The effects to flora will be positive in that the adjacent trees will get added nutrients and moisture. The effects on fauna will also be positive in that the boosted tree and grass growth will provide a habitat attractive to birds, insects and people. Not only will this support local diversity, it will create a more pleasantly aesthetic setting for residents and neighbours.

Mitigation Measures

- **Potential odour and noise**.
  When the irrigation pump operates a very small noise can be heard as the effluent fills the dripper lines. The sound is negligible. A slight hum can be heard from the aerator which operates 24/7. When operating correctly the system is odorless.
- **Measures to protect against system failure**
  In the case of a mechanical failure, a high level float is installed in the irrigation chamber with a visible alarm on the control box. This will allow plenty of time to rectify any faults with plenty of emergency storage available (1600L). In the case of a dripper line failure in the effluent field, a 137m2 (30%) reserve area is available.
- **Maintenance plan**
  An annual service is recommended for all secondary wastewater systems. This is to be organized by the owner before COC is issued.

Items not to be flushed:

- No bleaches or chlorine (i.e. Napisan – Bleach – Janola). These products are designed to kill bugs and will kill off the bacteria in the tank causing smells and constant blocking of the Bio (internal) filter. You can use these products if used in a bucket and tip on the lawn or safe place, not down your drain
- **No fats or oils down drains**. Fats and oils may block the tank filters and kill the bacteria in the tank.
- No tea leaves or coffee grounds down drains. These may block the filters in the tank and the external filter.
- No washing paint brushes or disposing of paints down drains. These products will not only kill bacteria in the tank, but the residue is very difficult and costly to remove.
- No disposable nappies, sanitary napkins, tampons or condoms. These products do not break down and cause a mass build up in the tank, and can cause blockages that can be costly to clean.
- Do not have a waste disposal unit. This waste takes a long time to break down and the system will require frequent emptying which is very costly.
- Use low sudsing laundry powder/liquid and non-caustic dish washing powder.

Wastewater Summary for Drainlayer

1 Install a Biocycle 8200 wastewater system approved to AS/NZS 1547:2012 standards, at least 3m away and downhill from the house and sleepout sites.

2 Mole plough into the topsoil (at least 150mm deep) 457m^2 of pressure compensating drip irrigation line with an emitter flow rate of 1.6lph, 500mm dripper spacing and 1.0m spacing between laterals. At no point should the lines be closer than, 1.5m from any boundary or 5m from the settlement road water table, see wastewater site sketch for location.

3 Where the existing topsoil is under 200mm deep extra topsoil will need to be added. The topsoil from the shed excavation a possible source.

4 Do not install on slopes over 10^0.

5 System to be installed and maintained as per manufacturers recommendations, including regular de-sludging of the primary treatment tank and dripper line flush.

6 Because the effluent field is sub surface laid this area is to be fenced from stock.

7 Once the system is operational obtain a commissioning statement from the drainlayer who installed it and send it to the supplier to obtain a warranty.

8 Stormwater overflow from the rain water tanks to be taken to an inground dispersal trench downslope and north of the house. Length of in-ground trench to be 14m. See fig C21 attached.

9 Ensure a service contract is in place.

I trust that this information meets your current requirements. Please do not hesitate to contact the undersigned on 09 421 5353 or cam@wileygeotechnical.co.nz if you require any further information.

Report prepared by:



Cameron Shaw

Wastewater Designer reg 3298



Matt Wiley, CPEng

Principal Engineer

Figure C21
Conceptual Layout of Flow Dispersal Trench

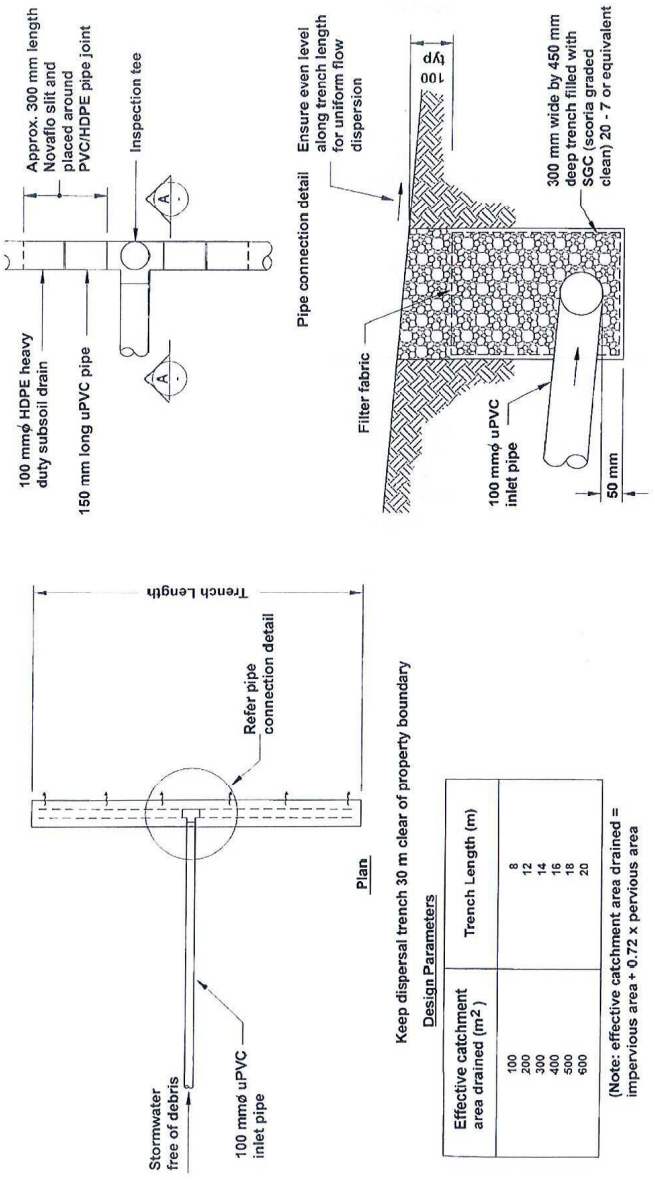

Keep dispersal trench 30 m clear of property boundary

Design Parameters

Effective catchment area drained (m^2)	Trench Length (m)
100	8
200	12
300	14
400	16
500	18
600	20

(Note: effective catchment area drained = impervious area + 0.72 x pervious area

Wiley Geotechnical Ltd

Client: Gina Utting
ginautting@gmail.com

WGL 21150

RE: On-site 'secondary' wastewater treatment / disposal system for a four-bedroom house and a sleepout at Lot 3, 760 Settlement Road, Hakaru.

Wastewater site sketch

457m2 effluent field. To be mole ploughed.

137m2 reserve area.

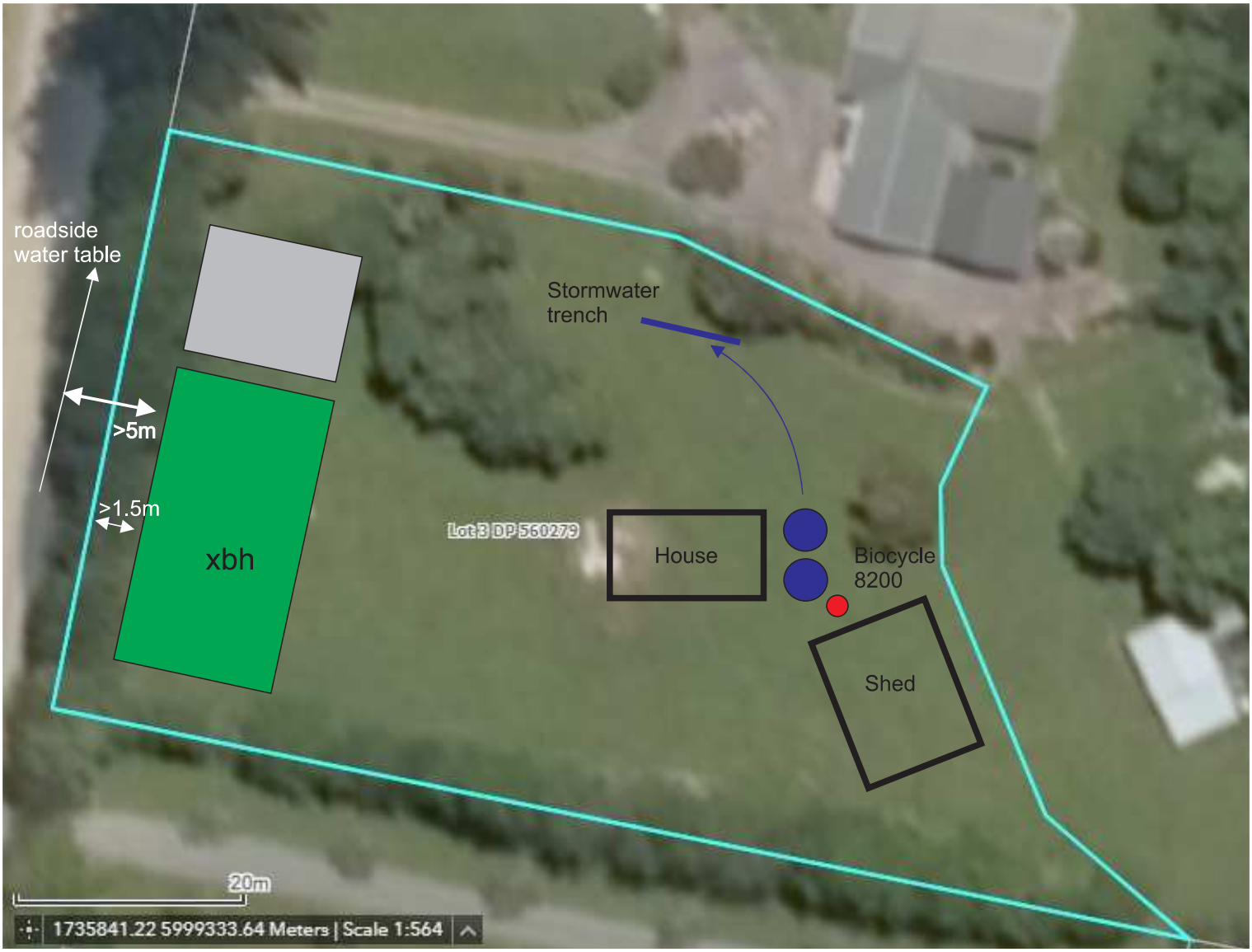

KAIPARA DISTRICT

Kaipara te Oranganui • Two Oceans Two Harbours

KAIPARA DISTRICT COUNCIL

Producer Statement

Design: On-Site Effluent Disposal Systems (AS/NZS 1547:2012)

Issued by: Cameron Shaw ..... (approved qualified design professional)

To: Gina Utting ..... (owner)

To be supplied to: Kaipara District Council.....

Property Location: 760 Settlement Road, Hakaru

.....

Lot 3 .....DP 560279.....Valuation Number.....

To Provide: Design an onsite effluent disposal system that will comply with the principles and procedures of AS/NZS 1547:2012 and provide a schedule to the owner for the system's maintenance.

The Design: Has been designed in accordance with Verification Method G13/VM4 On-Site Disposal and B2 (durability 15 years) of the Building Regulations 1992 in Compliance with the New Zealand

Building Code

As an independent approved design professional covered by a current policy of Professional Indemnity Insurance (Design) to a minimum value of $200,000, **I believe on reasonable grounds** that subject to:

1 Site verification – An Installation and commissioning report verifying the system and all components have been installed and operate in conformity with the design is required upon completion in accordance with 6.2.5.4, AS/NZS1547(2012).

2 The proposal All proprietary products met the performance requirements.
the proposed design will meet the re levant provisions of the Building Code and Northland Regional Council discharges rules.

☐ I understand and accept that Council may rely on this document, for the purposes of establishing compliance with the above building consent and that the content including the signature, whether electronic or not, is truly representative and authoritative of the information contained.

Digitally signed by Cameron Shaw
DN: C=US, E=csmangawhai@gmail.com, O=Wiley Geotechnical Ltd, OU=Wastewater Design, CN=Cameron Shaw
Date: 2019.12.27 09:27:35+13'00'

Cameron Shaw ..... (Signature of approved design professional)

Approved designer, BSc ..... (Professional qualifications)

3298 ..... (Licence Number or professional Registration number)

Address Unit 4, 6 Molesworth Drive, Mangawhai .....

.....

Telephone Number 09 4315353 ..... Fax Number .....

Cellphone ..... Date 24 June 2021 .....

KAIPARA DISTRICT

Kaipara te Oranganui • Two Oceans Two Harbours

KAIPARA DISTRICT COUNCIL

Note: This form is to accompany every application for a Building Consent incorporating AS/NZS 1547:2012 Approval as a design professional is at Council's discretion.

Kaipara District Council

AS/NZS 1547:2012

On-site Wastewater Disposal Site and Soil Evaluation

KAIPARA DISTRICT

Part A: Owners Details

1 Applicant Details:

Applicant Name	Gina Utting	
Company Name		
	First Name(s)	Surname
Property Owner Name(s)	Gina & Dawn	Utting & Owens
Nature of Applicant*	Owner	

*(*i.e. Owner, Leaser, Prospective Purchaser, Developer)*

2 Consultant / Site Evaluator Details:

Consultant/Agent Name	Wiley Geotechnical Ltd			
Site Evaluator Name	Cameron Shaw			
Postal Address				
Telephone Number	Business	094315353	Private	
	Mobile		Fax	
Name of Contact Person				
E-mail Address	cam@wileygeotechnical.co.nz			

3 Are there any previous existing discharge consents relating to this proposal or other waste discharge on this site?

Yes		No	✔	Please tick

If yes, give reference numbers and description

KAIPARA DISTRICT

4 List any other consent in relation to this proposal site and indicate whether or not they have been applied for or granted

If so, specify Application Details and Consent Nº.

(E.g. Land Use, Water Take, Subdivision, Earthworks Stormwater Consent)

Part B: Property Details

1 Location Details

Physical Address of Property	760 Settlement Rd, Hakaru.
Territorial Local Authority	**Kaipara District Council**
Regional Council	**Northland Regional Council**
Legal Status of Activity	Permitted: ✔ Controlled: ☐ Discretionary: ☐
Relevant Regional Rule(s)	section C.6.1 (PRPN),
Total Property Area (m²)	3,911
Map Grid Reference of Property if Known	36 08 27.50S 174 30 33.69E

2 Legal description of land (as shown on Certificate of Title)

Lot Nº	3	DP Nº	560279	CT Nº	
Other (specify)					

Please ensure copy of Certificate of Title is attached.

KAIPARA DISTRICT

Part C: On-Site Evaluation

(Refer AS/NZS 1547:2012 See Appendix D)

Has a relevant property history study been conducted?

Yes		No	✔

(Please tick one)

If yes, please specify the findings of the history study, and if not please specify why this was not considered necessary.

No evidence of pre-European or early European settlement at the time of our site visit.

recent council approved subdivision

1 Has a Slope Stability Assessment been carried out on the property?

Yes		No	✔

If **No**, why not?

effluent field on flat land

Please tick

If **Yes**, please give details of report (if possible, please attach report):

Author	
Company/Agency	
Date of Report	
Brief Description of Report Findings:	

KAIPARA DISTRICT

2 Site Information (See Table 1 attached):

Provide descriptive details below:
Performance of Adjacent Systems: primary on next door house working well.
Estimated Rainfall and Seasonal Variation:
Information available from **N.I.W.A MET RESEARCH**
Vegetation / Tree Cover: grass
Slope Shape: (Please provide diagrams) flat
Slope Angle: under 2 degrees
Surface Water Drainage Characteristics: downhill to north
Flooding Potential: **Yes** ☐ **/ No** ☑
If **Yes**, specify relevant flood levels on appended site plan i.e. one in five years and/or 20 year and/or 100 year return period flood level, relative to disposal area.
Surface Water Separation: 110m north east to Hakaru river
Site Characteristics: or any other limitation influencing factors proximity to boundary, topsoil depth

3 Site Geology Check Rock Maps

Alluvium of the Tauranga Group	
Geological Map Reference Number	NZL GNS

4 What Aspect(s) does the proposed disposal system face? (please tick)

North	☐	**West**	☐
North-West	☐	**South-West**	☐
North-East	☑	**South-East**	☐
East	☐	**South**	☐

KAIPARA DISTRICT

5 Site clearances (Indicate on site plan where relevant)

Separation Distance from	Proposed Clearances (m)	Septic Tank Treated Allowed(KDC+	Secondary Treated Allowed (KDC+NRC)
Boundaries	1.5	1.5 m	1.5 m
Surface water (i.e. permanent or intermittently flowing rivers, creeks,	110m		
Groundwater Bores horizontal distance	na	20 m	20 m
Subsurface water vertical separation	>1.2m		
Embankments/retaining walls	na	1.5 m	1.5 m
Other			
Reserve area set aside	30%	100 %	30 %

Part D: Site Assessment - Subsoil Investigation

(Refer AS/NZS 1547:2012 clause D2, Appendix D Site-and-Soil for Individual Lots

1 Please identify the soil profile determination method:

Test Pit		(Depth_____m)	Nº of Test Pits	
Bore Hole	1	(Depth_____m)	Nº of Bore Holes	1
Other (specify):				

Soil Report attached?

Yes	✔	No	

Please tick

2 Was fill material intercepted during the subsoil investigation?

Yes		No	✔

Please tick

If yes, please specify the effect of the fill on wastewater disposal

KAIPARA DISTRICT

3 Percolation testing (Soil Permeability) (Recommended for conventional trenches in all clay soils)

Please specify the method (refer to Appendix G AS/NZS 1547:2012					
Test Report Attached?	Yes	☐	No	☐	Please tick

4 Are surface water interception/diversion drains required?

Yes	☐	No	✔	Please tick

If yes, please show on site plan

4a Are subsurface drains required

Yes	☐	No	✔	Please tick

If yes enter details

5 Please state the depth of the seasonal water table:

Winter	>1.2	m	Measured	✔	Estimated	☐
Summer	>1.2	m	Measured	☐	Estimated	✔

6 Are there any potential storm water short circuit paths?

Yes	☐	No	✔	Please tick

If the answer is yes, please explain how these have been addressed

7 Estimated soil category *(Refer AS/NZS 1547:2012 (See E4.1 and Table E1)*

Is Topsoil Present?	cat 5	If so, Topsoil Depth?	0.2	(m)

Classification	Properties	Tick One
Sand	Very little to no coherence, cannot be molded., single grains	☐
Loamy sand	Slightly coherence, give a short ribbon 5mm that breaks easy	☐
Sandy loam	Forms a cast but will not roll in a ball. Individual sand grains can be seen	☐
Fine sandy loam	As for Sandy loam. Individual sand grains cannot be seen	☐
Loam	As for Sandy loam. But cast feels spongy	☐
Silty loam	As for loams but not spongy. Very smooth and silky	☐
Sandy clay loam	Can be rolled into a ball. Sand grains can be felt	☐
Fine sandy clay Loam	As for sandy clay loam but no sand grains visible	☐
Clay loam	Can be rolled into a ball with spongy feel, slightly plastic	☐
Silty clay loam	As for clay loams but not very spongy. Very smooth and silky	☐
Sandy clay	Forms a plastic ball in which sand grains can be seen, felt and heard	✓
Light clay	Smooth plastic ball that can be rolled into a rod. Slight resistance to shearing	✓
Silty clay	As for light clay but very smooth and silky	☐
Medium clay	Smooth plastic ball like plasticine. Can be moulded. Some resistance to ribboning	☐
Heavy clay	Smooth plastic ball like plasticine. Can be moulded. Firm resistance to ribboning	☐

Reasons for placing in stated category

PART E: Discharge Details

1 Water supply source for the property (please tick):

Rainwater (roof collection)	✓
Bore/well	☐
Public supply	☐

KAIPARA DISTRICT

2 Calculate the maximum daily volume of wastewater to be discharged, unless accurate water meter readings are available

(Refer AS/NZS 1547:2012 See 5.5.5 and Appendix L, M and N

Number of Bedrooms	1 - 2 - 3 - 4 - 5 - 6			4 + 1
Design Occupancy	8			(Number of People)
Per capita Wastewater Production	140	160	180	(tick) (Litres per person per day)
Other - specify	200	220	145	
Total Daily Wastewater Production	1370			(litres per day)

3 Do any special conditions apply regarding water saving devices

A) Full water Conservation Devices?	Yes	☐	No	✔	Please tick
b) Water Recycling – what %?	%	☐	No	☐	Please tick

If you have answered yes, please state what conditions apply and include the estimated reduction in water usage.

roof collection and standard water reduction fixtures dual flush cistern, shower flow restrictors, aerator faucets and front-loading washing machine roof (only for sleepout, house standard features) (145L/pp/day sleepout) (180L/day/pp house)

4 Is Daily Wastewater Discharge Volume more than 3000 litres per day:

Yes	☐	Please tick
No	✔	Please tick

Note if answer to the above is yes, an N.R.C wastewater discharge permit will be required

KAIPARA DISTRICT

PART F: Primary Treatment

(Please also refer to NRC rules)

1 Please indicate below the no. and capacity (litres) of all septic tanks including type (single/dual chamber grease traps) to be installed or currently existing: If not 4500 litre dual chamber, explain why not.

Number of Tanks	Type of Tank	Capacity of Tank (Litres)
	primary 2,900L Anoxic 600L aeration 2,800L Clarification 1,200L	
	Total Capacity	7,800L

2 Type of Septic Tank Outlet Filter to be installed?

(min 3.5mm screen required see NRC rules)

Azud 130 micron final filter

PART G: Secondary and Tertiary Treatment

(Please also refer to NRC rules)

1 Will the discharge effluent have a 5-day biochemical oxygen demand (BOD5) that is less than or equal to 30 grams per cubic metre and the total suspended solids (TSS) concentration that that is less than or equal to 45 grams per cubic metre?

(Manufacturers specifications required see NRC rules)

Yes	✓	No		(Please tick)	No means this is considered a primary system

KAIPARA DISTRICT

2 Please indicate the type of additional treatment, if any, proposed to be installed in the system: (please tick)

Secondary Treatment	✔		
Home aeration plant	✔		
Commercial aeration plant			
Intermediate sand filter			
Recirculating sand filter			
Recirculating textile filter			
Clarification tank	✔		
Tertiary Treatment			
Ultraviolet disinfection			
Chlorination			
Other		Specify	

PART H: Land Disposal Method

(Refer AS/NZS 1547:2012 appendices L, M and N)

1 Please indicate the proposed loading method: (please tick)

Gravity	
Dosing Siphon	
Pump	✔

2 High water level alarm to be installed in pump chamber(s)

Yes	✔	No	

If not to be installed, explain why.

3 If a pump is being used, please provide the following information:

Total Design Head	26 or 32	(m)
Pump Chamber Volume	300L	(Litres)
Emergency Storage Volume	1600L	(Litres)

KAIPARA DISTRICT

4 Please identify the type(s) of land disposal method (land application systems) proposed for this site: (please tick)

(Refer AS/NZS 1547:2012 appendix K)

Surface Dripper Irrigation			
Sub-surface Dripper irrigation	✔		
Standard Trench			
Deep Trench			
Mound			
Evapo-transpiration Beds			
Other		Specify	

5 Please identify the loading rate you propose for the option selected in the above, stating the reasons for selecting this loading rate:

(Refer to AS/NZS 1547:2012 appendix L)

Loading Rate 3.0mm/m2/day		(Litres/m2/day)
Disposal Area 594	Design 457	(m2)
	Reserve 137	(m2)

Explanation

(2 x 145 = 290) + (6 x 180 = 1080) = 1370/3.0 = 457m2. reserve 457 x 30% = 137m2

KAIPARA DISTRICT

6 What is the available reserve wastewater disposal area?

Reserve Disposal Area (m²)	137m2
Percentage of Primary Disposal Area (%)	30

7 Please provide a detailed description of the design and dimensions of the disposal field and attach a detailed plan of the field relative to the property site:

Description and Dimensions of Disposal Field:

see wastewater site sketch

Plan Attached?	Yes	✔	No		Please tick

If not, explain why not

PART I: Maintenance & Management

(Please also refer to NRC rules)

1 Has a maintenance agreement been made with the treatment and disposal system suppliers?

Yes		No		Please tick

Name of Suppliers

Biocycle Hamilton

KAIPARA DISTRICT

PART J: Assessment of Environmental Concerns

1 Is an assessment of environmental concerns included with application? *(Refer Fig 4.1C3)*

Yes	✔	No		Please tick

If Yes, list and explain possible effects

PART K: Is Your Application Complete?

1 Is a Northland Regional Council Discharge Consent Required?

Yes		No	✔	Please tick

2 In order to provide a complete application you have remembered to:

Fully Complete this Assessment Form	yes
Include a *Location Plan* and *Site Plan* (with Scale Bars)	yes
Attach an Assessment of Environmental Concerns	yes

3 Declaration

☐ I understand and accept that Council may rely on this document, for the purposes of establishing compliance with the above building consent and that the content including the signature, whether electronic or not, is truly representative and authoritative of the information contained.

I hereby certify that, to the best of knowledge and belief, the information given in this application is true and complete.

Name	Matt Wiley	Signature	Matt Wiley Digitally signed by Matt Wiley DN: C=NZ, E=matt@wileygeotechnical.co.nz, OU=Wiley Geotechnical Ltd, CN=Matt Wiley Date: 2020.03.17 10:08:14+13'00'
Position	Principle engineer. CPENG	Date	24 June 2021

Note:

Any alteration to the site plan or design after approval will result in non-compliance.

An Installation and commissioning report verifying the system and all components have been installed and operate in conformity with the design is required upon completion in accordance with 6.2.5.4, AS/NZS1547(2012)is required before the Code Compliance Certificate can be issued.

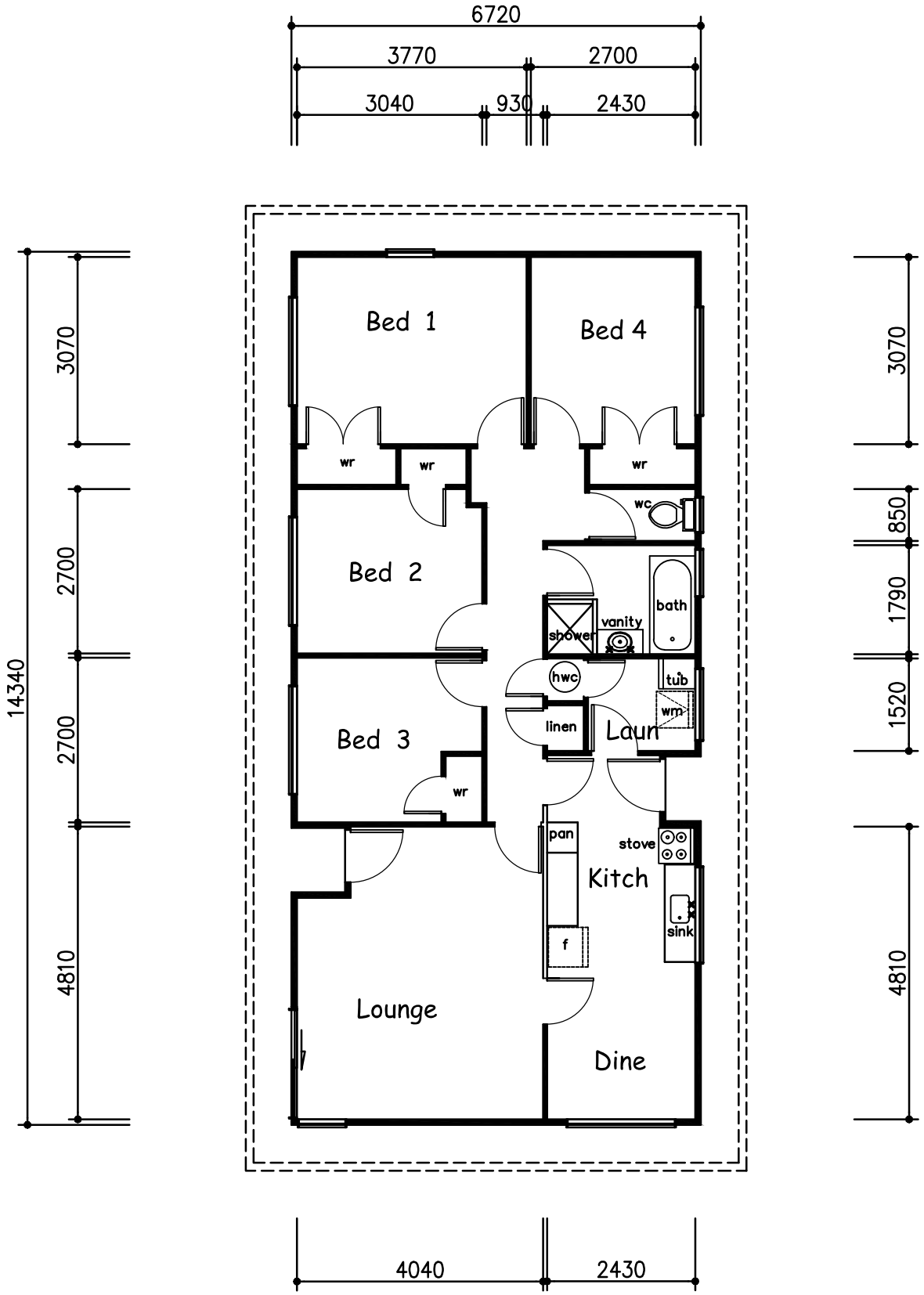

Floor Layout
96.36m²

All dimensions are to the framing, before commencing any works on the building verify dimensions.

HHR 126

BCW Design Ltd
54 Halsey Drive
Lynfield 1042
Ph 09 626 3803
Mob 0274 887 377
bruce@bcwdesign.co.nz

House for Relocation
ex 5 Topliss Drive

Drawn by B. C. Wood
Scale 1:100 (A4)
Date 22.04.2021

Job No 21036

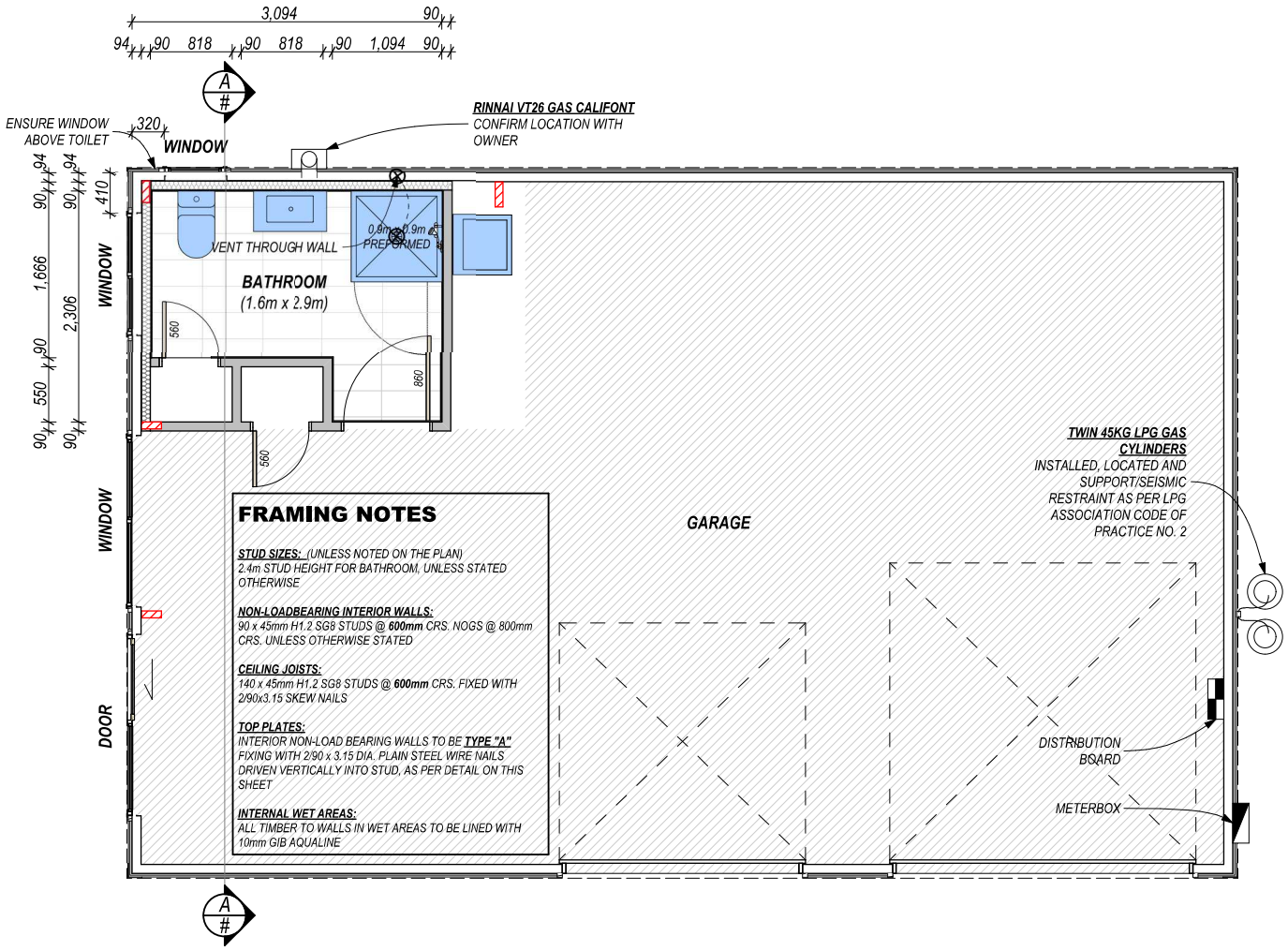

FLOOR PLAN
1:50

FLOOR FINISHES:
HATCHING SHOWN INDICATING FLOORING FINISH INDICATIVE ONLY. CONFIRM LOCATION AND EXTENT WITH OWNER

DIMENSIONS:
CONTRACTOR IS TO CONFIRM ALL DIMENSIONS ONSITE BEFORE COMMENCING ANY WORKS

G4 VENTILATION:
NATURAL VENTILATION =
- 5% OF FLOOR AREA (OPENABLE WINDOW)

MECHANICAL VENTILATION =
REFERENCE AS1668.2 TABLE B1 EXTRACT RATES

- BATHROOM/TOILETS:	MIN. 25L/S
- LAUNDRIES:	MIN. 20L/S
- KITCHENS:	MIN. 50L/S

JOINERY NOTES:
(JOINERY)
DOUBLE GLAZED CLEAR , ALUMINIUM POWDERCOATED JOINERY.
ALL UNITS VIEWED FROM EXTERIOR
ALL DIMENSIONS ARE **TRIM** SIZE (NOT WINDOW SIZE)
CONFIRM BEFORE COMMENCING CONSTRUCTION.
ALL JOINERY TO BE POWDERCOATED ALUMINIUM AND BE INSTALLED IN STRICT ACCORDANCE WITH THE MANUFACTURERS REQUIREMENTS.
ALL JOINERY TO HAVE H3.1 JAMBLINERS.
ALL GLAZING BELOW 800mm FROM F.F.L. TO BE TOUGHENED SAFETY GLASS

JOINERY MANUFACTURER TO CHECK AND VERIFY ALL DIMENSIONS, AND STRUCTURAL SUPPORTS WHERE REQUIRED.

GLAZING TO COMPLY WITH THE FOLLOWING STANDARDS
NZS 3504: SPECIFICATION FOR ALUMINIUM WINDOWS
NZS 4223: CODE OF PRACTICE FOR GLAZING IN BUILDINGS
NZS 4211: SPECIFICATION FOR THE PERFORMANCE OF WINDOWS

ALL GLASS SHOWER SCREENS TO BE TOUGHENED SAFETY GLASS TO COMPLY WITH NZS 4223:

ANY WINDOW SILL CLOSER THAN 760mm TO THE TOP OF A TOILET SEAT OR WINDOW SEAT TO HAVE RESTRICTORS INSTALLED AS PER F4/AS1 2.0 AND BE TOUGHENED SAFETY GLASS TO COMPLY WITH NZS 4223:

GLASS, TOUGHENED AS REQUIRED FOR PANE SIZE.
ALL FIXINGS AND FLASHINGS TO MANUFACTURERS DETAILS AND SPECIFICATIONS.
INSTALL WITH FLASHING TAPE SYSTEM TO WRAP MANUFACTURERS SPECIFICATIONS AND DETAILS.

FINISHES TO ALL SILL TRAYS AND FLASHINGS TO MATCH JOINERY FRAMES.

REV.	DATE	DESCRIPTION	DRAWN
A	07/10/19	WDC RFI	CC

BARNES SHED
TUDEHOPE ROAD, MATARAU, WHANGAREI

FLOOR PLAN

****BC SET ONLY****

JOB NO:	0097
REVISION:	A
SHEET SIZE:	A3
PAGE:	03 OF 5
DATE:	14/10/2019
DRAWN:	CC

EXPOSURE ZONE C: FIXINGS ARE TO COMPLY WITH NZBC B2 DURABILITY AND NZS 3604:2011 SECTION 4 - DURABILITY.
ALL EXPOSED FIXINGS AND FIXINGS WITHIN 600mm OF GROUND LEVEL (SHELTERED & EXPOSED) TO BE TYPE 304 STAINLESS STEEL

NOTE
ALL BOLTS SHALL HAVE 50SQ X 3MM WASHERS TO TIMBER FACES

FLASHING AND WRAP SYSTEMS
ALL FLASHINGS, FLASHING TAPES, WRAPS, UNDERLAYS AND ASSOCIATED ACCESSORIES ARE TO BE INSTALLED STRICTLY IN ACCORDANCE WITH THE MANUFACTURERS SPECIFICATIONS.

LIGHTING
ARTIFICIAL LIGHTING TO COMPLY WITH NZBC G8/AS1
SMOKE ALARMS.-IF REQUIRED
SMOKE ALARMS SHALL COMPLY WITH APPROVED DOCUMENT F7 WARNING SYSTEMS.

CONFIRM THE LOCATION OF THE FOLLOWING WITH OWNER PRIOR TO INSTALLATION:
- FLOOR COVERINGS - CONFIRM LOCATION, EXTENT AND DIRECTION OF FLOOR COVERINGS SHOWN
- METER BOX & DISTRIBUTION BOARD

WET AREAS WATERPROOFING SYSTEM OPTIONS.
ALL DETAILS/WINDOWS TO COMPLY WITH NZBC E3 INTERNAL MOISTURE AND MANUFACTURER'S PRODUCT DETAILS.
PROVIDE AN IMPERVIOUS AND EASILY CLEANABLE SURFACE TO ALL WALLS & FLOOR AREAS LIKELY TO BE SPLASHED TO COMPLY WITH E3/AS1.
(WALLS)
GIB AQUALINE TO BATHROOM WALLS
WET AREA VENTILATION.
TO COMPLY WITH NZBC G4 VENTILATION

INTERIOR DOORS
TYPICAL DOORS:
1980mm PAINT QUALITY HOLLOW CORE DOORS WITH 18mm PAINT QUALITY DOOR JAMBS UNLESS STATED OTHERWISE

INSULATION
WALL INSULATION: R2.2 WALL INSULATION TO EXTERIOR BATHROOM WALL

TIMBER TREATMENT:
TREATMENT LEVELS TO COMPLY WITH NZBC CLAUSE B2/AS1 DURABILITY, NZS3602. TIMBER AND WOOD BASED PRODUCTS FOR USE IN BUILDING AND NZS3640 CHEMICAL PRESERVATION OF ROUND AND SAWN TIMBER.

H1.2-ALL WALL FRAMING AND ASSOCIATED MEMBERS
ROOF FRAMING, TRUSSES AND CEILING JOISTS
ENCLOSED FRAMING WITHIN SKILLION / FLAT ROOFS

H3.1-CLADDING CAVITY BATTENS

STUD GRADE
UNLESS SPECIFIED OTHERWISE WALL FRAMING IS GRADED TO SG8 AS PER NZS3604:2011
STUD SIZE
90x45 STUDS

CLAYTON
DRAFTING & DESIGN LTD
corry.clayton@hotmail.com PH: 021589219

ONLY COUNCIL STAMPED PLANS TO BE USED FOR CONSTRUCTION.
DO NOT SCALE OFF PLANS.
© COPYRIGHT CLAYTON DRAFTING & DESIGN LTD
0097-BARNES-(BC REV-A)-141019.pln

Diag. A

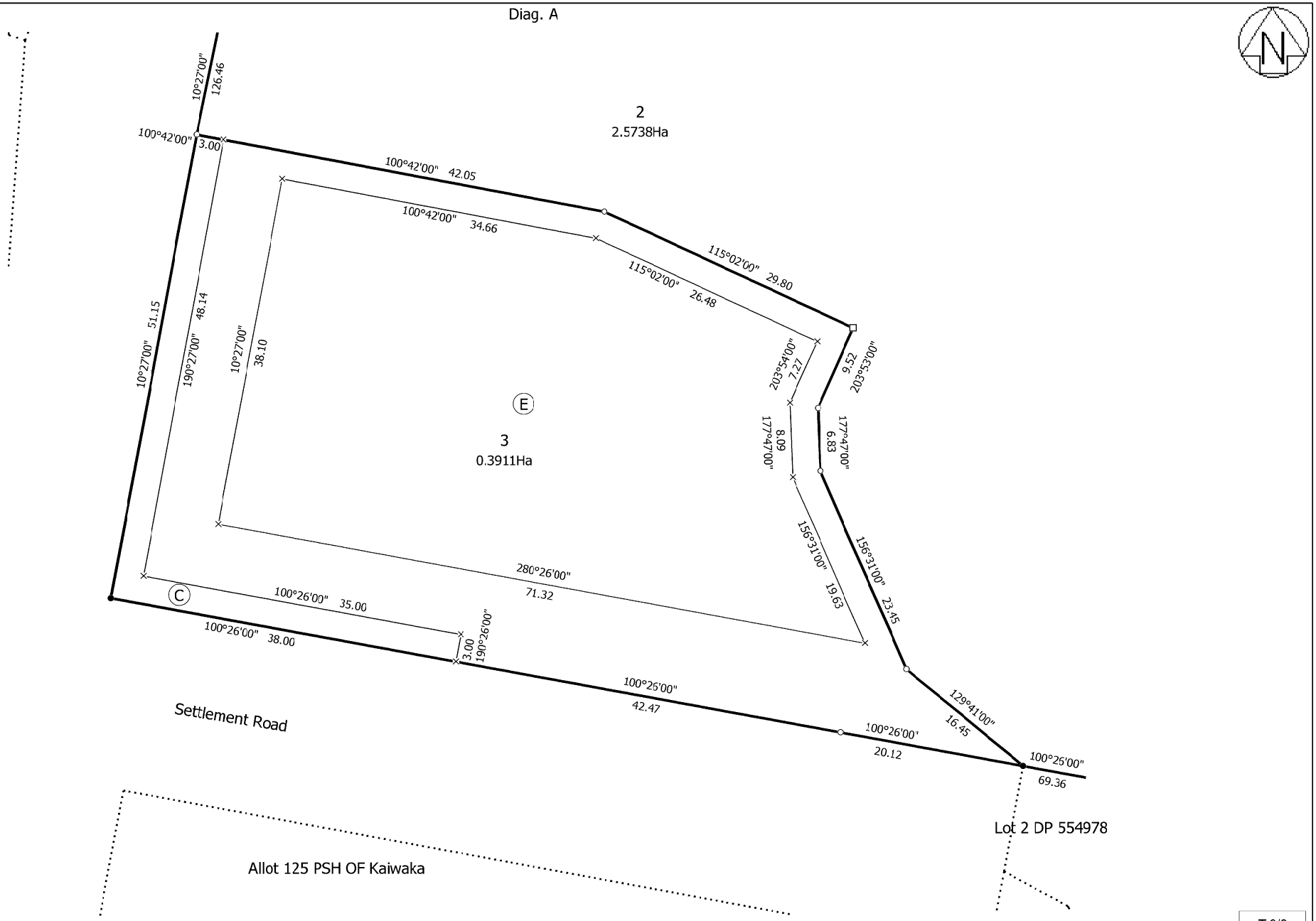

T 2/6

Land District: North Auckland Digitally Generated Plan Generated on: 17/05/2021 10:29am Page 4 of 8	Lots 1 - 3 Being a Subdivision of Allotment 310 Parish of Kaiwaka	Surveyor: Adam Paul Stanley Booth Firm: Pacific Coast Surveys Limited (Mang	Title Plan LT 560279 Approved on: 17/05/2021

RECORD OF TITLE
UNDER LAND TRANSFER ACT 2017
FREEHOLD

Search Copy

R.W. Muir
Registrar-General
of Land

Identifier	**988296**
Land Registration District	**North Auckland**
Date Issued	23 April 2021

Prior References
NA42B/368

Estate	Fee Simple
Area	3911 square metres more or less
Legal Description	Lot 3 Deposited Plan 560279

Registered Owners
Gina Maree Utting and Dawn Owens

Interests

Subject to Section 59 Land Act 1948
12086992.2 Consent Notice pursuant to Section 221 Resource Management Act 1991 - 23.4.2021 at 11:29 am
12126265.3 Mortgage to ANZ Bank New Zealand Limited - 2.6.2021 at 3:49 pm

BioCycle Systems Ltd
15 Mexted Place
P O Box 9262
HAMILTON
0800 246 292

Technical Design Specifications - BioCycle 8200 Aerated Treatment Plant

The BioCycle 8200 Aerated Wastewater Treatment System can be used to treat domestic effluent from residential or light commercial properties to a level where it can be safely dispersed on site without any negative effect on the environment.

The modular construction of the BioCycle plant makes it possible to manufacture a system for any flow rate that may be required. It is a cost-effective alternative for areas where ground porosity is at varying ends of the spectrum. On undulating sites where the land at lower levels is consumed by buildings or other facilities the BioCycle system allows effluent to be distributed on a level above the tanks location.

The BioCycle system complies with all specifications for AWTS treatment units in New Zealand providing effective and reliable wastewater treatment over a long period of time. The design parameters have been derived from proven technology in the field of on-site wastewater treatment. This is achieved by application of the specified parameters with excellent design and construction principals, including thorough testing of the system and final effluent.

The Biocycole 8200 system is capable of treating up to 1600Litres per day. The large primary septic chamber allows raw sewage a minimum 24 hours of primary treatment to be achieved enabling a minimum 20% reduction of BOD's through sedimentation before secondary processing is commenced.

Inside The BioCycle 8200 system

Septic Tank:

Raw effluent enters the primary tank (2900L) from the dwelling. The primary tank also receives the return activated sludge from the clarification tank, providing a stimulant for further breakdown of the influent load. The capacity of the primary tank allows 24 hours of residence for effluent ensuring sufficient BOD reduction and anaerobic breakdown has occurred.

Anoxic Chamber:

Filtered effluent enters the anoxic chamber from the primary holding via a 4' Biotube filter. This chamber acts as an additional septic, anaerobic zone which also receives recycled sludge from the clarification chamber to assist the further removal of nitrates.

BioCycle Systems Ltd
15 Mexted Place
P O Box 9262
HAMILTON
0800 246 292

Aeration Chamber:

Following primary treatment, aeration is provided in a 2800L chamber which contains submerged media. This purpose-built media is attached to the walls of the tank allowing even distribution of air through the chamber and media.

Diffused air at a minimum rate of 100Litres/min is required for adequate oxygenation. Air is blown via a pipe into the Aeration Chamber and released at the bottom by way of purpose made fine air bubble diffuser assemblies.

The aeration system is designed to maintain a minimum dissolved oxygen concentration of 2mg/L in the aerobic chamber within the maximum two hourly flow.

Clarification Chamber:

With a capacity of 1200L, effluent is further polished within the clarification chamber. This chamber is provided to remove settling and floatable solids passing through from the aerobic chamber.

Provision is made for constant automatic return of settled solids to the anoxic chamber by means of a subsurface sludge mechanism operated by venturi suction off the air supply manifold; this is done so that sufficient nitrified waste is recycled back to the oxygen deficient anoxic stage for denitrification to occur.

Pump Out Chamber:

Treated effluent enters the final 300L chamber where it will be pumped out to the irrigation field via a fine 130-micron disc filter to assist further removal of fine particles and ensuring a long-lasting irrigation field.

Tank Construction

In New Zealand, the BioCycle Systems Ltd standard concrete tank is constructed of steel reinforced concrete to a strength of 40Mpa. Tank walls are monolithic. The lid is constructed separately and sealed to the tanks walls to prevent leakage.

Dart Concrete Ltd manufacture the tank in accordance with the structural requirements of AS/NZS 1546.1.2008.

Manhole lids are formed in HDPE and internal components are PVC pressure pipe.

All electrical box housings and electrical control units are made of HDPE, fastened to the tank lid.

Each system is fitted out prior to leaving the factory. Prerequisite drainage, irrigation and electrical connections are completed on the destination building site.

BioCycle Systems Ltd
15 Mexted Place
P O Box 9262
HAMILTON
0800 246 292

Operating Plant Specifications

Aeration

LP80 HN Air Pump located inside the HDPE enclosure on top of the tank

- 85-watt power rating is single phase
- Exhaust capacity is 100 litres per minute per pump
- Noise level at 1.0m from the tank is approximately 35dB(A)

Irrigation Pump

A Bianco B42A/B (or Davey D42A/B, or similar) submersible pump with a maximum Head of at least 29m is fitted.

Power consumption is subjective and varies with total flow during any day and the type of irrigation system installed.

An estimated cost of power consumption used by the Biocycle blower and irrigation pump is around $150.00 per year, based on around 1.6kWhr/day at 0.25c/kWhr.

Monitoring System

All BioCycle units are installed with two alarms as warning devices. An alarm plate (audible/visual) is supplied to be installed in a convenient position inside the house. The alarm plate is commercial grade, similar to a light switch, with two coloured LED lights. A switch plate provides for the alarm to sound and to be switched to 'mute' when heard.

The alarm panel is incorporated into an electrical circuit breaker, located at the Biocycle system or fuse box, as a safeguard against electrical faults.

The two LED lights indicate:

1. High-Water level, designed to sound if water level in the irrigation chamber reaches a critical level. This indicates that the submersible pump is malfunctioning, or the irrigation filter is blocked.
2. Air pressure fault, designed to sound if the blower ceases to operate or there is an air blockage.

The home occupants are responsible for keeping the irrigation filter clean and ensuring the irrigation drip lines and flush valves are not obstructed or broken.

BioCycle Systems Ltd
15 Mexted Place
P O Box 9262
HAMILTON
0800 246 292

Final Effluent Quality

A properly maintained system produces treated water of a very high quality.

Testing of the BioCycle 8200 at the OSET facility in Rotorua has reported the following:

AS/NZS 1547:2012 Secondary Effluent Quality Requirements

These requirements are that 90% of all test samples must achieve a BOD_5 of $\leq$ 20 g/m^3 and TSS of $\leq$ 30 g/m^3 with no one result for BOD_5 being >30 g/m^3 and no one result for TSS being >45 g/m^3.

The **BioCycle 8200 system achieved** a performance level of **100%** for BOD_5 and **100%** for TSS based on the full set of 37 test results in weeks 9 to 35, with no results exceeding the maximums. The **BioCycle 8200 system** thus **meets** the secondary effluent quality requirements of **AS/NZS 1547:2012** at the test flow rate of 1,000 L/day (ie at 70% of the plants advised design capacity).

Benchmark Ratings

The **BioCycle 8200 system achieved** the following effluent quality ratings for the sixteen benchmarking results in weeks 20 to 35.

Indicator Parameters	Median	Std Dev	Rating	Rating System				
				A+	*A*	*B*	*C*	*D*
BOD (mg/L)	*4.5*	*1.4*	A+	*<5*	*<10*	*<20*	*<30*	*≥30*
TSS (mg/L)	*7.7*	*3.6*	A	*<5*	*<10*	*<20*	*<30*	*≥30*
Total Nitrogen (mg/L)	*22.1*	*2.4*	B	*<5*	*<15*	*<25*	*<30*	*≥30*
NH_4- Nitrogen (mg/L)	*0.2*	*0.1*	A+	*<1*	*<5*	*<10*	*<20*	*≥20*
Total phosphorus (mg/L)	*4.4*	*0.3*	B	*<1*	*<2*	*<5*	*<7*	*≥7*
Faecal Coliforms (cfu/100mL)	*54,000*	*23,660*	C	*<10*	*<200*	*<10,000*	*<100,000*	*≥100,000*
Energy (kWh/d) (mean)	*6.3*	*1.9*	D	*0*	*<1*	*<2*	*<5*	*≥5*

Ongoing testing on the BioCycle 8200 allows for continuous improvement to exceed final effluent quality expectations.

BioCycle Guarantee / Warranty

Each BioCycle system is covered by a limited warranty of 10 years on the concrete tank, and two years (24 months from date of installation) on all electrical components within the system.

Within the warranty periods stated above, BioCycle Systems Ltd guarantees to repair or replace any part of the system requiring remedy due to defective manufacture, provided BioCycle is given notice of the problem within 24 hours of the customer being aware of the problem.

BioCycle Systems Ltd
15 Mexted Place
P O Box 9262
HAMILTON
0800 246 292

Essential rules for the care of your wastewater system.

All wastewater (toilets, bathrooms, laundry) produced on a rural property is discharged via pipes to an on-site wastewater treatment and land disposal system. The wastewater treatment system is a fragile biological (bacterial) process and therefore requires care by all residents and visitors.

You can help maintain an effective wastewater treatment system on your site by ensuring **no toxic chemicals** are put down sinks or toilets and by using only environmentally friendly cleaning products. Toxic chemicals, drugs (e.g. antibiotics) kill bacteria in the treatment system. These organisms are needed to treat wastewater and if healthy populations are not maintained, the system will fail resulting in poorly treated wastewater discharging into the soil, offensive odour and increased maintenance costs. You should also manage your water use to protect the system from overloading.

DO

- Try to take short showers in preference to baths.
- Use bio-degradable soaps and cleaners.
- Check all your cleaning products to see if they are suitable for septic tanks.
- Use natural soaps (rather than chemicals) for cleaning.
- Scrape all plates and dishes to compost/rubbish, removing as much food/fat as possible.
- Repair/fix all leaking taps as soon as possible.
- Use phosphate free or low phosphorus laundry detergents.

DO NOT

- Do Not pour any toxic/strong chemicals (paint, oil, grease, thinners, pesticides down any drains).
- **Do Not flush any products other than standard toilet paper** down the toilet! This means no tampons, pads, condoms, cigarette butts or 'wet-wipes'.
- Do Not discard any drugs down the toilet or sink.
- Do Not use strong cleaners (bleach, Canesten, Napisan, strong citrus or alcohol base).
- Do Not tip chlorine, anti-**septic,** anti-**bacterial**, or disinfectant type products down drain.
- Do Not use chemical drain cleaning products to clear a blockage – call a plumber.
- Do Not do all your laundry in one day – spread your loads through the week.
- Do Not install sink garbage grinders. If a grinder exists, don't discharge high volumes of scraps, especially carbohydrates, bones or fats & oils into it.
- Do Not put coffee grinds down the sink drain.

On-site Effluent Treatment National Testing Programme (OSET NTP)

PERFORMANCE CERTIFICATE
BioCycle 8200 On-site Domestic Wastewater Treatment System,
OSET NTP Trial 11, 2015/2016

System Tested

The **BioCycle 8200 system** is a Submerged Aerated Filter Wastewater Treatment Plant using Kompakt 2 tubular submerged fixed growth filter system [298 m^2 (2.16 m^3)]. The manufacturers rated design capacity is 1,400 litres/day. Total operational liquid volume is 7,800 litres (Primary Chamber 2,900 litres; Anoxic chamber 600 litres; Aeration Chamber 2,800 litres; Clarification Chamber 1,200 litres; Pump Chamber 300 litres; Emergency storage 1,600 litres). No tertiary treatment (such as UV disinfection) is incorporated. It comprises a single 5 chamber concrete tank. The air blower is Thomas LP-80, 0.08kW, running continuously and operating a continuous venturi airlift recirculation pump at 40 lph. There is a 100mm Biotube effluent filter in the Primary Chamber and an Azud 130 micron final effluent filter. The discharge pump was a Davey D42A/B 0.90kW. The manufacturers stated service frequency is 6 monthly.

Test Flow Rate

The **BioCycle 8200 system** was tested at 1,000 litres/day (equivalent to servicing a 3-bedroom 5 to 6 person household) over an 8 month (35 week) period November 2015 to July 2016 followed by a 1 month (4 week) high load effects test involving 3 days at 1,500 litres/day followed by 2 days at 2,000 litres/day then 1,000 litres/day over the following 2 weeks.

Testing and Evaluation Procedures

A total of 37 treated effluent samples of organic matter (BOD_5) and suspended solids (TSS) at generally six day intervals during weeks 9 to 35 were tested and evaluated against the secondary effluent quality requirements of the joint Australia/NZ standard AS/NZS 1547:2012.
A total of 16 treated effluent samples of organic matter (BOD_5), total suspended solids (TSS), total nitrogen (TN), ammonia nitrogen (NH_4-N), total phosphorus (TP) and faecal coliforms (FC) at generally six day intervals during weeks 23 through 35 were tested and the results benchmarked and rated on their median values. In addition, the energy used by the treatment system was assessed on the mean of consumption levels over the 16 sample days.

General Performance

The BioCycle 8200 plant had a number of major issues throughout the testing period requiring frequent operator attendance including: correction to wiring of the discharge pump, repair of a significant air leak, repair of a significant water leak and attendance to clean a clogged effluent filter on a number of occasions. **This number of structural and operational errors is considered by the Audit Group to be unsatisfactory**.

AS/NZS 1547:2012 Secondary Effluent Quality Requirements

These requirements are that 90% of all test samples must achieve a BOD_5 of $\leq$ 20 g/m^3 and TSS of $\leq$ 30 g/m^3 with no one result for BOD_5 being >30 g/m^3 and no one result for TSS being >45 g/m^3. The **BioCycle 8200 system achieved** a performance level of **100%** for BOD_5 and **100%** for TSS based on the full set of 37 test results in weeks 9 to 35, with no results exceeding the maximums. The **BioCycle 8200 system** thus **meets** the secondary effluent quality requirements of AS/NZS 1547:2012 at the test flow rate of 1,000 L/day (ie at 70% of the plants advised design capacity).

Benchmark Ratings

The **BioCycle 8200 system achieved** the following effluent quality ratings for the sixteen benchmarking results in weeks 20 to 35.

Indicator Parameters	Median	Std Dev	Rating	Rating System				
				A+	*A*	*B*	*C*	*D*
BOD (mg/L)	*4.5*	*1.4*	A+	*<5*	*<10*	*<20*	*<30*	*≥30*
TSS (mg/L)	*7.7*	*3.6*	A	*<5*	*<10*	*<20*	*<30*	*≥30*
Total Nitrogen (mg/L)	*22.1*	*2.4*	B	*<5*	*<15*	*<25*	*<30*	*≥30*
NH_4- Nitrogen (mg/L)	*0.2*	*0.1*	A+	*<1*	*<5*	*<10*	*<20*	*≥20*
Total phosphorus (mg/L)	*4.4*	*0.3*	B	*<1*	*<2*	*<5*	*<7*	*≥7*
Faecal Coliforms (cfu/100mL)	*54,000*	*23,660*	C	*<10*	*<200*	*<10,000*	*<100,000*	*≥100,000*
Energy (kWh/d) (mean)	*6.3*	*1.9*	D	*0*	*<1*	*<2*	*<5*	*≥5*

On-site Effluent Treatment National Testing Programme,
c/- Technical Manager 10 Tide Close, Mount Wellington, AUCKLAND 2013
Mob: 021 626 772 E-mail: ray@hedgland.co.nz

On-site Effluent Treatment National Testing Programme (OSET NTP)

This Performance Certificate is specific to the **BioCycle 8200** model as specified above when operated at a flow rate of 1,000 litres/day (70% of advised plants design capacity), and is valid for 5 years from the date below. For the full OSET NTP report on the performance of the **BioCycle 8200 system** contact Murray White of **BioCycle Systems**, Hamilton, P: 0800 246 292, or M: 0274 998 799 or E: murray@biocyclesystems.co.nz.

Authorised By:



Ray Hedgland, Technical Manager, OSET NTP
1 February 2017

On-site Effluent Treatment National Testing Programme,
c/- Technical Manager 10 Tide Close, Mount Wellington, AUCKLAND 2013
Mob: 021 626 772 E-mail: ray@hedgland.co.nz

SUBMERSIBLE DRAINAGE PUMPS
Model Numbers: D42A, D42M, D42A/B

DEPEND ON DAVEY

WATER PRODUCTS



D42A, D42M D42A/B

SUMP PUMPS

PRODUCT DESCRIPTION

Submersible sump pump with twin impeller design for higher pressure, up to 32m head

APPLICATIONS

- Lawn & garden irrigation
- Sump emptying to higher heads
- Treated effluent disposal
- Water transfer from wells
- Model D42A/B specially designed for non potable rainwater applications

"A" suffix models equipped with present length automatic float switch fitted for automatic operation.

FEATURES & BENEFITS

Double mechanical seal, one in oil bath on motor and extra mechanical seal on pump
- Superior reliability
- Long service life

Corrosion resistant 304 stainless steel shaft, motor shell and fasteners
- Long service life

D42A/B has cast 316 stainless steel motor caps and super tough engineered thermo plastic pump casing
- Outstanding corrosion resistance
- Long life

Centrifugal multistage twin impeller design
- Higher pressures & increased efficiency

Closed vane impellers with long engagement "D" drives
- Positive operation
- Long service life

D42A & D42M have labyrinth impeller neck rings
- Maintain pump performance
- Less susceptible to wear

D42A/B has patented independently floating neck rings
- Outstanding pump performance
- Long pump life

Corrosion resistant hard wearing polycarbonate impellers
- Long service life

Corrosion resistant stainless steel fine mesh suction strainer with large surface area
- Prevents blockages of the pump by solids

In-built automatic thermal overload
- Protects the motor in the event of blockage or voltage supply problems

HO7RNF oil resistant leads, 10 metres long with 3 pin power plug
- Easy to connect to power supply
- Longer life in dirty water

OPERATING LIMITS

	D42A,M	D42A/B
Capacities to	110lpm	130lpm
Max. total head	26m	32m
Max. submergence	12m	
Max. pumped water temperature	40°C	
Max. soft solids	1.9mm O.D.	
Outlet size (BSP)	1" F	

Suitable Fluids
Clean water of neutral pH containing up to 1% small solids. Some wear should be expected while pumping hard solids in suspension.

H/O & MFG SCORESBY Quality System
Quality Endorsed Company
ISO 9001 Lic 10636 Standards Australia

TECHNICAL SPECIFICATIONS

MATERIALS OF CONSTRUCTION

PART	MATERIAL
Impeller	Glass filled polycarbonate
Lock nut	304 stainless steel
Pump casing	Cast iron - FC200 (D42A&M) Glass filled polycarbonate (D42A/B)
Diffuser and blanking ring	Glass filled noryl
Mechanical seal - pump	Carbon/ceramic
Mechanical seal - motor	Silicon carbide/ceramic in oil bath
Shaft seal elastomer	Nitrile rubber
Pump shaft	304 stainless steel
Orings	Nitrile rubber
Motor shell	304 stainless steel
Bottom bearing housing	Cast iron - FC200 (D42A&M) Cast 316 stainless steel (D42A/B)
Upper motor cover	Cast iron - FC200 (D42A&M) Cast 316 stainless steel (D42A/B)
Handle	304 stainless steel
Fasteners	304 stainless steel
Float & power supply leads	HO7RN-F oil resistant

HYDRAULIC PERFORMANCE

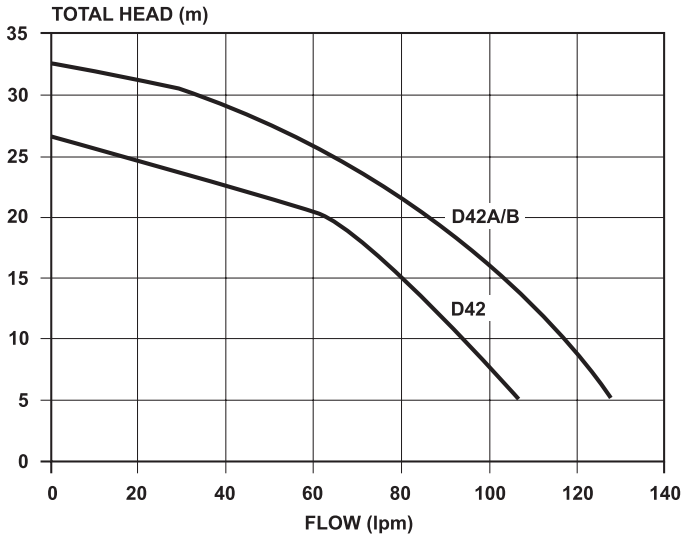

ELECTRICAL DATA

Supply voltage	220-240V
Supply frequency	50Hz single phase
Speed	2 pole, 2850rpm
Full load current	4.0A
Locked rotor current	14A
Input power (P_1)	0.94kW
Output power (P_2)	0.60kW
IP rating	X8
Insulation class	Class F
Starting	P.S.C.
Lead	10m long

DIMENSIONS

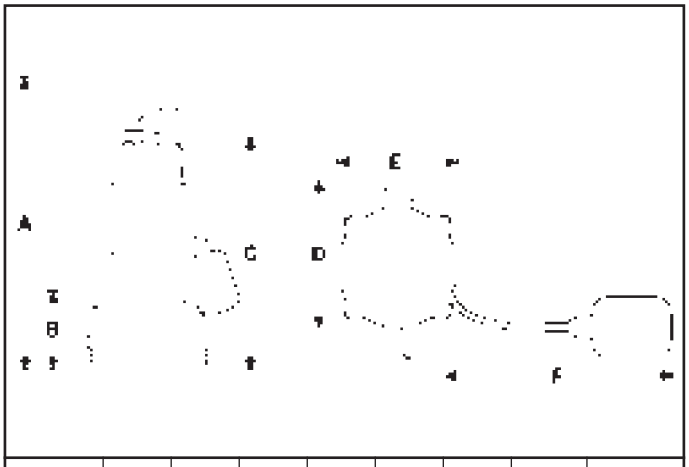

Model	A	B	C	D	E	F	Outlet B.S.P.	Net Weight (kg)
D42A	475	130	370	235	195	330	1″F	20
D42M	475	130	370	235	195	330	1″F	19.5
D42A/B	475	130	370	235	195	330	1″F	18.5

All dimensions in mm unless otherwise stated.

INSTALLATION & PRIMING

Use a rope to position and retrieve the pump. Do not lower or retrieve the pump using the power lead as this may damage the cable entry seals, causing water leaks and unsafe operation.
Don't use this product for recirculating or filtering swimming pools, spas, etc. While these pumps are built to high safety standards, they are not approved for installations where people will be in the water while they are operating.
Don't pump abrasive materials. Sand and grit in the water being pumped will accelerate wear, causing shortened pump life.
Keep your pump clean, particularly in situations where lint, hair or fibrous materials may get bound around the pump shaft. Regular inspection and cleaning will extend pump life.
Make room for the float switch to operate. Automatic models have a float switch to turn them on when the water level rises and turn them off again when it has been pumped down to the safe operating level of the pump. If the float switch is not free to rise and fall, correct pump operation may not be possible.
Don't run your pump dry. Non-automatic models must be switched off manually or by way of an external float/level switch when the water level is reduced to the top of the pump housing.

This literature is not a complete guide to product usage. Further information is available from your Davey dealer, Davey Customer Service Centre and from the relevant product Installation and Operating Instructions. This data sheet must be read in conjunction with the relevant product Installation and Operating Instructions and all applicable statutory requirements. Product specifications may change without notice.
® Davey is a registered trademark of Davey Products Pty Ltd. © Davey Products Pty Ltd 2001.

Visit Davey on-line for further information
www.davey.com.au

DEPEND ON
DAVEY
WATER PRODUCTS

Davey Products Pty Ltd
Member of the GUD Holdings Ltd Group
ABN 18 066 327 517
Head Office and Manufacturing
6 Lakeview Drive,
Scoresby, Australia 3179
Ph: +61 3 9730 9222
Fax: +61 3 9753 4100
Website: www.davey.com.au
Customer Service Centre
Ph: 1300 367 866
Fax: 1300 369 119
E-mail: sales@davey.com.au
Interstate Offices
Sydney - Brisbane - Adelaide
Perth - Townsville

International
6 Lakeview Drive,
Scoresby, Australia 3179
Ph: +61 3 9730 9121
Fax: +61 3 9753 4248
E-mail: export@davey.com.au

Germany
Kantstrasse 47,
04275 Leipzig
Ph: +49 341 301 0412
Fax: +49 341 301 0413
E-mail: akrenz@daveyeurope.com

New Zealand
2 Rothwell Avenue,
North Harbour, Auckland 1330
Ph: +64 9 914 3680
Fax: +64 9 914 3685
E-mail: sales@daveynz.co.nz

USA - Davey Pumps Inc.
1005 N. Commons Drive
Aurora, Illinois 60504
Ph: +1 630 898 6976
Fax: +1 630 851 7744
Website: www.daveyusa.com
E-mail: sales@daveyusa.com

DPM128-3a/0806/WEB supersedes DPM128-3/3K/0706/SC

WILEY GEOTECHNICAL LTD

BOREHOLE No. 1

SITE: Lot 3, 760 Settlement Road, Hakaru (Effluent Field)

REF: 21150

Sheet 1 of 1

REDUCED LEVEL (RL) / INFERRED GEOLOGY	DESCRIPTION OF SOIL	SOIL SYMBOL	DEPTH (m)	SAMPLE TYPE	WATER CONTENT (%)	WATER LEVEL	CORRECTED VANE SHEAR STRENGTH (kPa) ● Peak Field Vane ○ Remoulded Field vane 50 100 150	SCALA PENETROMETER BLOWS / 100 mm 5 10 15
	FILL/TOPSOIL dark brown							
Alluvium of the Tauranga Group	SILT slightly clayey, slightly plastic, brown increase clay and plasticity		1 2 3 4 5					
	E.O.H: 1.2m							

NOTES Groundwater was not encountered.

LOGGED BY: CS

DATE DRILLED: 9-Jun-21

DRILL METHOD 50 mm Hand Auger

Habitat Design Ltd

SPECIFICATION
of work to be done and materials to be used in carrying out the works shown on the accompanying drawings

Proposed Garage/Sleepout

Project Specification

752 Settlement Road, Hakaru, Kaiwaka, New Zealand
Project Ref:

Printed: 07 September 2021

masterspec

Specification built using Masterspec software
Project ID: 233811 - 230348

TABLE OF CONTENTS

1220	PROJECT	2
1232	INTERPRETATION & DEFINITIONS	4
1232S1	EXPLANATION OF SCHEDULE SECTIONS	6
1233	REFERENCED DOCUMENTS	7
3155	RAFT FLOOR SYSTEM	8
3820	CARPENTRY	13
4161T	THERMAKRAFT UNDERLAYS, FOILS, DPC, DPM, & TAPES	17
4223SC	SHADOWCLAD® PLYWOOD CLADDING	23
4311RI	ROOFING INDUSTRIES PROFILED METAL ROOFING	30
5113G	GIB® PLASTERBOARD LININGS	36
6700	PAINTING GENERAL	42
6711	PAINTING EXTERIOR	48
7123B	BUTELINE HOT & COLD WATER SYSTEM	50
7701	ELECTRICAL BASIC	58

1220 PROJECT

1 GENERAL

This general section describes the project including:

- A description of the work
- Design construction safety
- Principal's Health & Safety matters
- Site description, features and restrictions
- Design parameters for design by contractor
- Archaeological discovery

1.1 READ ALL SECTIONS TOGETHER

Read all general sections together with all other sections.

1.2

1.3 RESTRICTED BUILDING WORK

This project includes Restricted Building Work.

Design Construction Safety

1.4 DESIGN CONSTRUCTION SAFETY

The project designers are unaware of unusual or atypical features, which a reasonably experienced contractor may not be aware of, that may present a hazard or risk during a typical construction process. The Contractor is still required to undertake its own assessment, to determine if they consider there are any further safety matters and provide for these in carrying out the construction of the work.

Principal's Health & Safety Matters

1.5 PRINCIPAL'S KNOWN SITE HAZARDS

Site hazards known to the principal are:
~

1.6 PRINCIPAL'S SITE HEALTH AND SAFETY PLAN

Obtain a copy of the principal's site health and safety plan.

Site

1.7 SITE

The site consists of: ~
As shown on drawing: ~

1.8 LEGAL DESCRIPTION

The site of the works, the street address and the legal description are shown on the drawings.

1.9 EXISTING SERVICES

The services are also shown on the drawings.

1.10 SITE FEATURES

~

Site environment - Durability

1.11 EXPOSURE ZONE

The exposure zone is to NZS 3604, Section 4 Durability, 4.2 Exposure zones and NZBC E2/AS1.
The site zone is: ~

Site environment - Wind

1.12 WIND DESIGN PARAMETERS - NON SPECIFIC DESIGN

The design wind pressures are to NZS 3604, Table 5.4 Determination of wind zone, up to and including Extra High Wind Zone.
Building wind zone High

Site environment - Seismic

1.13 EARTHQUAKE ZONE - NON SPECIFIC DESIGN

The zone is to NZS 3604, Section 5 Bracing design, 5.3 Earthquake bracing demand.
The earthquake zone is: 1

Archaeological discovery

1.14 REPORT FINDING ANY ANTIQUITIES AND ITEMS OF VALUE

Report the finding of any fossils, antiquities and other items of value, to the Contract Administrator. All to remain undisturbed until approval is given for removal.

Pre-1900, items or evidence of human activity on the site, come under the Heritage New Zealand Pouhere Taonga Act 2014. If such items or evidence is discovered work must stop immediately and the Contract Administrator must be notified immediately. The site may be classified as an Archaeological Site under the Act, and the Contract Administrator or Owner must contact the Heritage New Zealand for authority to proceed.

Post-1900 items remain the property of the owner, pre-1900 items may remain the property of the owner or the Crown subject to what is found.
Known archaeological information relating to this site includes the following: -
~

1232 INTERPRETATION & DEFINITIONS

1 GENERAL

This general section relates to definitions and interpretation that are used in this specification.

Definitions

1.1 DEFINITIONS

Hold point:	A stage of the construction where the contract administrator and any other nominated person requires notice to be given that particular work is to be carried out. Work may not proceed on that particular part until the contract administrator and any other nominated person has advised that work can continue. A notice period of 2 Working Days is required unless stated otherwise.
Notification point:	A stage of the construction where the contract administrator and any other nominated person requires notice to be given that particular work is to be carried out. Work may continue and the contract administrator and any other nominated person may choose whether or not they wish to witness the particular work being carried out. A notice period of 2 Working Days is required unless stated otherwise.
Product:	A thing or substance produced by natural process or manufacture.
Proprietary:	Identifiable by naming the manufacturer, supplier, installer, trade name, brand name, catalogue or reference number.
Provide and fix:	"Provide" or "fix" or "supply" or "fix" if used separately mean provide and fix unless explicitly stated otherwise.
Required:	Required by the documents, the New Zealand Building Code or by a statutory authority.
Review:	Review by the contract administrator and other consultants is for general compliance only. Review does not remove the need for the contractor to comply with the stated requirements, details and specifications of the manufacturers and suppliers of individual components, materials and finishes. Neither can the review be construed as authorising departures from the contract documents.
Working day:	Working day means a calendar day other than any Saturday, Sunday, public holiday or any day falling within the period from 24 December to 5 January, both days inclusive, irrespective of the days on which work is actually carried out.
Workplace:	Workplace means the place where work is being carried out, or is customarily carried out, for a business or undertaking including any place where a worker goes, or is likely to be, while at work (under Health and Safety at Work Act 2015).

1.2 PERSONNEL

Principal:	The person defined as "Principal" in the conditions of contract.
Contractor:	The person contracted by the principal to carry out the contract.
Contract administrator:	The person appointed by the principal to administer the contract on the principal's behalf. Where no person has been appointed by the principal, it means the principal or the principal's representative.

1.3 ABBREVIATIONS

The following abbreviations are used throughout the specification:

AAMA	American Architectural Manufacturers Association
AS	Australian Standard
AS/NZS	Joint Australian/New Zealand Standard
ASTM	American Society for Testing and Materials
AWCINZ	Association of Wall and Ceiling Industries of New Zealand Inc.
BCA	Building Consent Authority
BRANZ	Building Research Association of New Zealand
BS	British Standard
COP	Code of practice
CSIRO	Commonwealth Scientific and Industrial Research Organisation
HERA	Heavy Engineering Research Association
LBP	Licensed Building Practitioner
MBIE	Ministry of Business, Innovation and Employment
MPNZA	Master Painters New Zealand Association Inc
NZBC	New Zealand Building Code
NZS	New Zealand Standard
NZS/AS	Joint New Zealand/Australian Standard
NZTA	New Zealand Transport Agency
NUO	Network Utility Operator
OSH	Occupational Safety and Health
PCBU	Person Conducting a Business or Undertaking (under Health and Safety at Work Act 2015)
RBW	Restricted Building Work
SARNZ	Scaffolding and Rigging New Zealand Inc
SED	Specific Engineering Design
TA	Territorial Authority
TNZ	Transit New Zealand (Transit New Zealand is now New Zealand Transport Agency NZTA - some specifications are still prefixed TNZ)

1.4 DEFINED WORDS

Words defined in the conditions of contract, New Zealand Standards, or other reference documents, to have the same interpretation and meaning when used in their lower case, title case or upper case form in the specification text.

1.5 WORDS IMPORTING PLURAL AND SINGULAR

Where the context requires, words importing singular only, also include plural and vice versa.

1232S1 EXPLANATION OF SCHEDULE SECTIONS

1 GENERAL

This general section provides an explanation of schedule sections and their relationship to general sections and work sections. Specific schedule sections contained within this specification are also identified.

1.1 EXPLANATION OF SCHEDULE SECTIONS

A schedule section identifies work sections that contain common requirements, as identified in the title of the schedule section. For example 1235S1 SCHEDULE OF SHOP DRAWINGS identifies work sections that have requirements for shop drawings. Details of the requirements are contained in the identified work sections with additional requirements contained in the general section 1235 SHOP DRAWINGS.

Some schedule sections are identified by the 4 digit CBI (Co-ordinated Building Information) number of the general section that they relate to, followed by the letter "S" followed by a numeral (1-9). The numeral allows for multiple schedule sections to be associated with the same general section.

Other schedule sections that do not share a common CBI number with a general section, have their own unique 4 digit CBI number, followed by the letter "S" followed by a numeral. These schedule sections contain additional subject content relating to the schedules and the identified work sections.

1.2 SCHEDULE SECTIONS

There are no work section requirements.

1233 REFERENCED DOCUMENTS

1 GENERAL

1.1 REFERENCED DOCUMENTS

Throughout this specification, reference is made to various New Zealand Building Code Compliance Documents (NZBC __), acceptable solutions (__ AS_) and verification methods (__ VM_) for criteria and/or methods used to establish compliance with the New Zealand Building Code.

Reference is also made to various standards produced by Standards New Zealand (NZS, AS/NZS, NZS/AS), overseas standards and to listed Acts, Regulations and various industry codes of practice and practice guides. The latest edition (including amendments and provisional editions) at the date of this specification applies unless stated otherwise.

It is the responsibility of the contractor to be familiar with the materials and expert in the techniques quoted in these publications.

Documents cited both directly and within other cited publications are deemed to form part of this specification. However, this specification takes precedence in the event of it being at variance with the cited documents.

1.2 DOCUMENTS

Documents referred to in the GENERAL sections are:

NZBC F5/AS1	Construction and demolition hazards
AS/NZS 1170.2:2011	Structural design actions - Wind actions
NZS 1170.5	Structural design actions - Earthquake actions - New Zealand
AS/NZS 3012	Electrical installations - Construction and demolition sites
NZS 3109	Concrete construction
NZS 3114	Specification for concrete surface finishes
NZS 3602	Timber and wood-based products for use in building
NZS 3604	Timber-framed buildings
NZS 4210	Masonry construction: Materials and workmanship
NZS 4781	Code of Practice for Safety in Welding and Cutting
AS/NZS 5131	Structural steelwork - Fabrication and erection
NZS 6803	Acoustics - Construction Noise

Building Act 2004
Building Regulations 1992
Health and Safety at Work Act 2015
Health and Safety at Work (General Risk and Workplace Management) Regulations 2016
Health and Safety at Work (Hazardous Substances) Regulations 2017
Health and Safety in Employment Regulations 1995
New Zealand Building Code
Heritage New Zealand Pouhere Taonga Act 2014
Resource Management Act 1991
Smoke-free Environments Act 1990

WorkSafe	Guidelines for the provision of facilities and general safety in the construction industry
WorkSafe	Good Practice Guidelines - Excavation Safety
WorkSafe	Scaffolding in New Zealand - Good Practice Guidelines
WorkSafe	Managing Work Site Traffic - Good Practice Guidelines

3155 RAFT FLOOR SYSTEM

1 GENERAL

This section relates to a raft floor system, a non specific design reinforced concrete waffle raft floor slab-on-ground.

1.1

1.2 ABBREVIATIONS AND DEFINITIONS

Refer to the general section 1232 INTERPRETATION & DEFINITIONS for abbreviations and definitions used throughout the specification.

The following definitions apply specifically to this section:

ACRS	Australian Certification Authority for Reinforcing Steels - An independent certification scheme for reinforcing steel and structural steel, by product and manufacturer/processor. Certifies compliance with Australia/New Zealand Standards. ACRS Web site - www.steelcertification.com

1.3 DOCUMENTS

Documents referred to in this section are:

NZBC B1/VM1	Structure
NZS 3104	Specification for concrete production
NZS 3109	Concrete construction
NZS 3114	Specification for concrete surface finishes
NZS 3604	Timber-framed buildings
NZS 4229	Concrete masonry buildings not requiring specific engineering design
AS/NZS 4671	Steel reinforcing materials

Documents listed above and cited in the clauses that follow are part of this specification. However, this specification takes precedence in the event of it being at variance with the cited document.

1.4

Requirements

1.5 QUALIFICATIONS

Tradespeople to be competent, experienced and familiar with the raft floor system materials and techniques specified.

1.6 STEEL REINFORCING COMPLIANCE

Steel reinforcing materials for concrete to AS/NZS 4671. Steel to be manufactured in New Zealand, or by an overseas manufacturer holding a current valid (or equivalent) NZ S Mark or ACRS certificate for that type of steel. Confirm compliance and provide evidence if requested.

1.7 QUALITY RECORDS

Keep accurate records relating to strength and quality of materials used during construction. Include records of workmanship during construction and photographs of as-built details. Make the information available to the Building Consent Authority inspector on request.

Performance

1.8 INSPECTION NOTIFICATION REQUIREMENTS

~

1.9 INSPECTIONS BY CONSTRUCTION REVIEWER

~

1.10 INSPECTIONS BY BUILDING CONSENT AUTHORITY

~

2 PRODUCTS

Materials

2.1 BLINDING

50mm maximum compacted GAP 7.

2.2 TIMBER FORMWORK

No. 2 framing and dressing or merchantable grade radiata pine boards to NZS 3631.

2.3 DAMP-PROOF MEMBRANE

0.25mm minimum polyethylene to NZS 3604: clause 7.5.4, Damp-proof membrane (DPM). Refer to SELECTIONS.

2.4 POLYSTYRENE PODS

Proprietary purpose made polystyrene pods.

2.5 REINFORCEMENT

Bars to AS/NZS 4671. Grade 500E deformed, other than for ties, stirrups and spirals, unless shown otherwise on the drawings.

2.6 INTERNAL CORNER REINFORCEMENT

Minimum 2 x D10 bars Grade 300E to AS/NZS 4671.

2.7 MESH

Welded reinforcing mesh to AS/NZS 4671 as modified by NZS B1/VM1, generally, Class E, minimum to NZBC B1/AS1 - Grade 500E, 2.27kg/m2 (1.14kg/m2 in each direction). Minimum SE62 500E mesh or the equivalent.

2.8 TYING WIRE

Mild drawn steel wire not less than 1.2mm diameter.

2.9 CONCRETE - RAFT APPLICATIONS

20 MPa 100mm slump mix in either 13mm or 19mm nominal aggregate size.

Components

2.10 SPACERS

Proprietary spacers. Refer to SELECTIONS for size.

3 EXECUTION

Conditions

3.1 STORAGE

Take delivery of and accept all materials and accessories dry and undamaged. Store on timber fillets on hard ground protected from weather, contamination and damage in a secure area clear of any building operation.

Handle and store reinforcing steel and accessories without damage or contamination.
Ensure reinforcement is clean and remains clean so that at the time of placing concrete it is free of all loose mill scale, loose rust and any other contamination that may reduce bonding capacity. Store steel fabric flat.

3.2 HANDLING

Avoid distribution and contact with damaging substances. Do not drag sheets across each other and other materials. Protect edges and surface finishes from damage.

Application - raft floor system

3.3 SITE CLEARANCE

Clear the slab area of any vegetation and topsoil down to the subgrade level.

3.4 BUILDING PLATFORM

Create a building platform to a level surface approximately 330mm below finished floor level. Cut and/or fill sloping sites. Confirm finished floor level.

3.5 POST-CUT INSPECTION

Inspect and confirm that the soil conditions are as anticipated by the geotechnical investigation and report and conform to the requirements of the raft system supplier manual.

3.6 TEMPORARY BUILDING PLATFORM DRAINAGE

Construct suitable drainage to keep excessive ground water off the building platform during and after construction as required.

3.7 HARDFILL

Place hardfill and ensure it is spread and compacted with mechanical compaction.

3.8 UNDERGROUND SERVICES

Ensure underfloor services are installed in the subsoil or hardfill in locations as shown on the drawings and according to the raft floor system manufacturer's requirements.

3.9 BLINDING LAYER

Spread GAP 7 blinding layer to a minimum 500mm past the outside edge of the slab, compact to a level layer no greater than 50mm thick and no higher than 305mm below finished floor level.

3.10 FORMWORK

Construct formwork as required, well braced and tied to remain in position, straight and plumb during construction. Ensure formwork will provide for the topping depth, including rebates and the required concrete finish.

3.11 INSTALL DAMP-PROOF MEMBRANE

Apply DPM to the prepared basecourse extending to the outside of all edge beams or fold and staple up the inside of the formwork. Overlap all joints in the DPM sheets a minimum 150mm. Tape laps and penetrations with 50mm wide pressure sensitive plastic tape. Ensure DPM is not damaged during the construction process. Repair all damage to DPM before proceeding with following procedures.

3.12 PLACE POLYSTYRENE PODS

Place polystyrene pods in a regular waffle pattern using the spacers in the specified grid pattern to fit the floor plan. Cut pods on site with a saw or suitable hot wire as required. Cut holes for services and trim around piles as required on site.

3.13 INSTALL SPACERS

Install spacers and locations to the raft floor system manufacturer's requirements.

Form standard ribs between pods using 100mm spacers. Place the spacers at a minimum of one spacer along each edge of each pod or part pod. The ribs in both directions form a waffle pattern throughout the slab.

Form the edge beam using 300mm spacers. Place the spacers at 1200mm centres maximum along the perimeter of the slab at least and one spacer per pod or part pod.

Form ribs to support load bearing walls using 300mm spacers. Place the spacers at a minimum of one spacer along the edge of each pod or part pod.

3.14 PLACE REINFORCING STEEL: RIB STEEL

Place rib reinforcing steel in the bottom of the internal ribs and supported in the correct position by spacers. Lap all steel 480mm minimum, and hook all plain bars. At the junction with the edge beam, each rib steel bar shall sit on top of the edge beam bars and extend to the outermost bar. Allow for 75mm cover to the edge of the beam. Place 1 x H12 bar in each 100mm wide rib and 2 x H12 bars in each 300mm wide rib.

3.15 PLACE REINFORCING STEEL: EDGE BEAM STEEL

Place the two edge beam reinforcing bars in the bottom of the edge beam and supported in the correct position by the spacers. Tie one edge beam bar below the mesh at the perimeter of the area covered by the polystyrene pods. Lap all steel 480mm minimum, and hook all plain bars. At corners, the inner bottom bars and the top bars cross each other and extend to 75mm from the outside face of the edge beam. Tie these bars together where they cross. Tying of edge beam steel is only required at corners.

3.16 PLACE REINFORCING STEEL: RE-ENTRANT CORNER STEEL

Place two D10 bars, 1200mm in length across the corner. Tie to the top of the mesh at re-entrant corners at 200mm centres with 50mm side cover from the internal corner.

Install specified steel to raft floor system manufacturer's requirements. Ensure specified minimum cover requirements are maintained.

3.17 PLACE REINFORCING MESH AND CHAIRS

Place reinforcing mesh over the pods and support on the mesh chairs spaced at 1200mm centres minimum, with two mesh chairs minimum placed per pod and with one mesh chair minimum per part pod.

3.18 MESH LAPS

Welded reinforcing mesh to be lapped and tied, such that the outermost wires overlap by the greater of:

- the spacing of the cross wires plus 50mm
- 150mm or
- manufacturer's requirements

Do not count bar extensions beyond the outermost cross wire.

3.19 FORM SLAB AND OPENING REBATES

Form rebates, as detailed on drawings.

Form a minimum 50mm rebate in slab for masonry veneer construction with a width dependent on the veneer width, cavity width and overhang. Waterproof the rebate with a bituminous sealer on both the vertical and horizontal faces.

3.20 TOPPING SLAB DEPTH

85mm minimum plus additional cover as required for infloor heating.

3.21 PRE-PLACEMENT INSPECTION

Arrange for excavations, formwork and reinforcement to be inspected and passed by the Building Consent Authority.

3.22 EQUIPOTENTIAL BONDING REINFORCING

If it is a project requirement, ensure that reinforcing is electrically equipotential bonded (or at least conductor cable attached) before the concrete is poured. For bonded reinforcing ensure all reinforcing is interconnected with good contact at joints and tight conductive ties.

3.23 CONCRETE PLACEMENT AND COMPACTION

Ensure the rib and edge beam canals are clean, free of debris. Pour the floor in a single pour ensuring that the pods remain in position during placing. Pour concrete onto the top of each pod prior to filling the ribs around the pod to help prevent them from floating and lifting.

Compact concrete using a suitable poker vibrator for the ribs and ground beams and into all corners of the formwork. Screed as required. Confirm levels with a laser level.

3.24 CONCRETE FINISHING

Float and trowel to provide a U3 finish to NZS 3114: table 2, Classes of floor, exterior pavement and invert finishes.

3.25 CONCRETE CURING

Curing of the concrete slab must take place immediately after finishing the concrete to NZS 3109 by one of the following curing methods:

- ponding or continuous sprinkling of water
- placing a wet covering or plastic membrane over the slab
- the use of liquid membrane curing compounds

3.26 SHRINKAGE CONTROL JOINTS

Cut shrinkage control joints as shown on the plans after hardening to a minimum depth of 25mm within 24 hours in summer or 48 hours in winter.

Where shrinkage control joints have not been shown on the plans, position the shrinkage control joints to coincide with major changes in the floor plan. Agree position of shrinkage control joints with the designer.

Bay dimensions formed by the shrinkage control joints to be limited to a maximum ratio of length to width of 2 to 1 with a maximum dimension of 6 metres. Place the shrinkage control joints over the 100mm wide internal ribs wherever possible. Where a shrinkage control joint runs along the line of a 300mm wide loadbearing rib, locate the cut directly above one edge of the 300mm rib. Do not place supplementary reinforcing bars (including re-entrant corner steel) across any shrinkage control joints.

3.27 CLEAN OUT SHRINKAGE CONTROL JOINTS

Clean out control joints. If required fill with suitable flexible sealant.

Finishing

3.28 STRIKE FORMWORK

Strike formwork at least 12 hours after the slab has been finished without damaging or overloading structure.

3.29 SURFACE DEFECTS

Make good surface defects immediately after forms are stripped. Make good hollows or bony areas with suitable patching mortar, finished to the same tolerances as the parent concrete. Fill any tie rod holes with 1:2 mortar.

Completion

3.30 LEAVE

Leave work to the standard required by following procedures.

3.31 CLEAN UP

Clean up surrounding areas following completion of the concrete placement.

3.32 REMOVE

Remove debris, unused materials and elements from the site.

4 SELECTIONS

4.1 DAMP-PROOF MEMBRANE

Type: ~

4.2 POLYSTYRENE PODS

Brand: ~
Size: ~mm x ~mm x ~mm

4.3 SPACERS

Brand: ~
Size: ~mm and ~mm

4.4 CONCRETE SURFACE FINISH

Location: ~
Finish class: U3 (interior)

3820 CARPENTRY

1 GENERAL

This section relates to the supply and erection of timber framing, as a framed structure, or as partitioning. It includes prefabricated timber and engineered wood.

1.1 RELATED WORK

Refer to 4161 UNDERLAYS, FOIL AND DPC for underlays, foils and DPC.

1.2 DOCUMENTS

Refer to the general section 1233 REFERENCED DOCUMENTS. The following documents are specifically referred to in this section:

NZBC B2/AS1	Durability
AS/NZS 1328.1	Glued laminated structural timber - Performance requirements and minimum production requirements
AS/NZS 1604.1	Preservative-treated wood-based products - Part 1: Products and treatment
NZS 3602	Timber and wood-based products for use in building
NZS 3603	Timber structures standard
NZS 3604	Timber-framed buildings
NZS 3622	Verification of timber properties
NZS 3640	Chemical preservation of round and sawn timber
AS/NZS 4357.0	Structural laminated veneer lumber - Specification
FTMA CoP	Frame and Truss Manufacturers Association Code of Practice

***A copy of NZS 3604 Timber-framed buildings, must be held on site.**

1.3 MANUFACTURER/SUPPLIER DOCUMENTS

1.4 QUALIFICATIONS

Workers to be experienced, competent trades people familiar with the materials and techniques specified.

1.5 DIMENSIONS

All timber sizes except for battens are actual minimum dried sizes.

2 PRODUCTS

2.1 TIMBER FRAMING, TREATED

Species, grade and in service moisture content to NZS 3602, NZBC B2/AS1 and treatment to NZS 3640, NZBC B2/AS1. Structural grade (SG) to NZS 3604, NZS 3622 with properties to NZS 3603.

2.2 WALL DWANGS, NOGS AND BLOCKING

If dwangs, nogs or blocking is required for exterior insulated walls, ensure they are not full depth of framing. Install flush with face of wall required, leaving a minimum 20mm or 45mm preferable gap to the other face to NZS 3604, 8.8. Dwangs and nogs if required to be at 1350mm centres maximum to NZS 3604, 8.8.

2.3 EXTERIOR CAVITY WALL BATTENS - TIMBER - NON-STRUCTURAL

H3.1 or H3.2 Radiata pine battens, minimum 20mm thickness, width and height to match timber framing studs. Temporary fix battens before being fixed into the framing with the cladding fixings. To NZS 3602, table 1, reference 1D.10, Requirements for wood-based building components to achieve a 50-year durability performance.

2.4 EXTERIOR CAVITY WALL BATTENS - PROPRIETARY - NON-STRUCTURAL

Extruded polypropylene battens, size approximately 45mm wide x 18mm thickness. Temporary fix battens before being fixed into the framing with the cladding fixings. To the scope limitations of NZBC E2/AS1, and NZS 3604 Building Wind Zones up to, and including "Extra High".

Components

2.5 NAILS

Type to NZS 3604, section 4, **Durability**, and of the size and number for each particular types of joint as laid down in the nailing schedules of NZS 3604, sections 6-10.

2.6 SCREWS

Wood screws to the requirements of NZS 3604, 2.4 Fastenings and Fabrication, and section 4, **Durability**, and of the type, number and form required for each screw application to NZS 3604, sections 6 - 10.

2.7 BOLTS AND COACH SCREWS

Bolts and coach screws complete with washers, to the requirements of NZS 3604, clause 2.4.5 Bolts and Coach Screws, and section 4, **Durability**, and of the type, number and form required for each particular junction to NZS 3604, sections 6 - 10.

2.8 NAIL PLATES

Comply with the requirements of NZS 3604, section 4, **Durability**, and of the number and form required for each particular junction to NZS 3604, sections 6 - 10. Plates to the plate manufacturer's design for the particular locations as shown on the drawings.

2.9 CONNECTORS

Comply with the requirements of NZS 3604, section 4, **Durability**, and of the number and form required for each particular junction to NZS 3604, sections 6-10. Connectors and structural brackets to the connector manufacturer's design for particular locations shown on drawings.

2.10 CORROSION RISKS

For interior timber, treated with copper-based timber preservatives (H3.2 or higher), use a minimum of hot-dipped galvanized steel fixings and fasteners.

For exterior timber, timber in damp areas and timber subject to occasional wetting, use only stainless steel (or equivalent) fixings and connectors, when the timber is treated with; Copper Azole (CuAz, Preservative code 58), Alkaline Copper Quaternary (ACQ, Preservative code 90), Micronise Copper Azole (code 88) or Micronised Copper Quaternary (code 89).

2.11 DPC

Refer to 4161 UNDERLAYS, FOIL AND DPC section

3 EXECUTION

3.1 EXECUTION GENERALLY

To NZS 3604 except as varied in this specification. Execution to include those methods, practices and processes contained in the unit standards for the National Certificate in Carpentry and the National Certificate in Joinery (cabinetry, exterior joinery, stairs).

3.2 SEPARATION

Separate all timber framing timbers from concrete, masonry and brick by: -

- a full length bituminous damp-proof membrane overlapping timber by at least 6mm; or
- a 12mm minimum free draining air space

3.3 ATTENDANCE

Provide and fix blocks, nogs, openings and other items as required by other trades.

3.4 MOISTURE CONTENT

Maximum allowable equilibrium moisture content (EMC) for non air-conditioned or centrally heated buildings for framing to which linings are attached.

Framing at erection:	24% maximum
Framing at enclosure:	20% maximum
Framing at lining:	16% maximum

3.5 SET-OUT

Set out framing in accordance with the requirements of NZS 3604 and as required to support sheet linings and claddings. When necessary provide framing to suit any required cladding/lining control joints and sheet joints.

3.6 FRAMING WALLS

Frame to required loading and bracing complete with lintels, sills and nogs, all fabricated and fastened to NZS 3604, section 8, **Walls**.

3.7 FRAMING ROOFS

Frame to required loading and bracing complete with valley boards, ridge boards and purlins. Design and fit roof trusses complete with anchorage. All fabricated and fastened to NZS 3604, section 9, **Posts** and 10, **Roof framing**.

3.8 FRAMING CEILINGS

Frame to required loading and bracing complete with runners and battens set out to support ceiling lining. All fabricated and fastened to NZS 3604, section 13, **Ceilings**. Trim for openings in ceilings and hatches to NZS 3604 section 13.3, **Openings in ceilings**. Provide blocking for water tanks located in the ceiling space to NZS 3604, section 13.4, **Water tanks in roof space**.

3.9 INSTALLING WALL UNDERLAYS

Refer to 4161 UNDERLAYS, FOIL AND DPC section

3.10 FIT CAVITY BATTENS

Fit and fix 20mm cavity battens over wall underlay or rigid air barrier, fully nail to timber studs to the requirements of the manufacturer or to NZS 3604. Fit and fix related flashings. Make allowance for cladding control joints where required. Fit and fix cavity closers to base of walls, open horizontal (or raking) junctions and over openings (windows, meters etc.).

3.11 DPC TO LOSP TREATED TIMBER

Refer to 4161 UNDERLAYS, FOIL AND DPC section.

3.12 DPC TO TIMBER

Refer to 4161 UNDERLAYS, FOIL AND DPC section.

4 SELECTIONS

4.1 EXTERIOR WALL FRAMING - RADIATA PINE

Member	Species	Grade	Treatment
Exterior walls:	Radiata pine	SG8	H1.2
Parapets:	Radiata pine	SG8	H1.2
Enclosed decks and balconies:	Radiata pine	SG8	H1.2
Cantilevered joists enclosed decks and balconies:	Radiata pine	SG8	H3.2
Nogs	Radiata pine	SG8	H1.2
Wall battens (not cavity):	Radiata pine	Merch	H1.2
Jamb battens:	Radiata Pine	Merch	H3.1

4.2 CAVITY BATTENS

Cavity battens	Species	Grade	Treatment
Timber - Non Structural:	Radiata pine	Merchantable	H3.1
Proprietary - non structural:	Manufacturer ~	Type ~	Reference ~
Cavity closer:	Manufacturer ~	Type ~	Reference ~

4.3 ROOF FRAMING - RADIATA PINE

Member	Species	Grade	Treatment
Rafters:	Radiata pine	SG8	H1.2
Trusses:	Radiata pine	SG8	H1.2
Purlins:	Radiata pine	SG8	H1.2
Ceiling joists and battens:	Radiata pine	SG8	H1.2
Valley boards:	Radiata pine	Merchantable	H1.2
Sarking:	Radiata pine	Merchantable	H1.2
Skillion roof framing:	Radiata pine	SG8	H1.2
Enclosed flat roof framing:	Radiata pine	SG8	H1.2

4.4 INTERIOR FRAMING - RADIATA PINE

Member	Species	Grade	Treatment
Non structural walls:	Radiata pine	SG8	H1.2
Structural and braced walls:	Radiata pine	SG8	H1.2

4.5 SPECIAL FRAMING ELEMENTS

Member	Species	Grade	Treatment
~			

4.6 NAILS

Location	Type	Material	Finish
~			

4.7 SCREWS

Location	Type	Material	Finish
~			

4.8 BOLTS AND COACH SCREWS

Location	Type	Material	Finish
~			

4.9 NAIL PLATES

Location	Type	Material	Finish
~			

4.10 CONNECTORS

Location	Type	Material	Finish
~			

4161T THERMAKRAFT UNDERLAYS, FOILS, DPC, DPM, & TAPES

1 GENERAL

This section relates to the application of **Thermakraft Ltd**, DPC, DPM, Wall & Roof Underlays, Foils, Flashing Tapes, and accessories.

1.1 RELATED WORK

Refer to ~ for ~

1.2 ABBREVIATIONS AND DEFINITIONS

Refer to the general section 1232 INTERPRETATION & DEFINITIONS for abbreviations and definitions used throughout the specification.

The following abbreviations apply specifically to this section:

NZMRM	New Zealand Metal Roofing Manufacturers Inc.

The following definitions apply specifically to this section:

Wall underlay	the same meaning as defined in NZBC E2/AS1, covering kraft based and synthetic wall underlays, sometimes called wall wraps, building wraps or building papers.

Documents

1.3 DOCUMENTS

Refer to the general section 1233 REFERENCED DOCUMENTS. The following documents are specifically referred to in this section:

NZBC C/AS2	Protection from fire
NZBC E2/AS1	External moisture
AS 1530.2	Methods for fire tests on building materials, components and structures - Test for flammability of materials
NZS 2295	Pliable, permeable building underlays
AS/NZS 2904	Damp-proof courses and flashings
NZS 3604	Timber-framed buildings
NZS 4214	Methods of determining the total thermal resistance of parts of buildings
AS/NZS 4389	Roof safety mesh
AS/NZS 4534	Zinc and zinc/aluminium-alloy coatings on steel wire
NZMRM CoP	NZ Metal Roof and Wall Cladding Code of Practice

1.4 MANUFACTURER/SUPPLIER DOCUMENTS

Thermakraft documents relating to work in this section are:
Thermakraft product manual and technical data sheets.
BRANZ Appraisal 329 - Supercourse 500™ Damp-Proof Course and Concealed Flashing
BRANZ Appraisal 611 - James Hardie Rigid Air Barriers
BRANZ Appraisal 651 - Thermakraft Covertek™ 407 Roof and Wall Underlay
BRANZ Appraisal 695 - Watergate Plus™ Wall Underlay
BRANZ Appraisal 743 - Thermakraft Covertek 405™ Roof and Wall Underlay
BRANZ Appraisal 878 - Thermakraft Aluband™ Window Flashing Tape
BRANZ Appraisal 912 - Thermakraft 220™ Synthetic Wall Underlay
BRANZ Appraisal 917 - Thermakraft Covertek 403™ Roof and Wall Underlay
BRANZ Appraisal 942 - OneSeal™ Multi-Fit Pipe and Cable Penetration Seals
BRANZ Appraisal 943 - Thermakraft Covertek 401™ Roof Underlay
BRANZ Appraisal 962 - The Thermakraft One Wrap System™
BRANZ Appraisal 1000 - Thermakraft Thermabar 397™ Light Diffusing Reflective Underlay
BRANZ Appraisal 1029 - Thermakraft Ausnet™ Hexagonal Wire Mesh
BRANZ Appraisal 1104 – Thermathene Orange™ Concrete Underlay
BRANZ Appraisal 1122 – Thermaflash™ Flashing Tape

Code Mark Certificate 30069 - Thermakraft Covertek 403™ Absorbent Breathable Roof Underlay
Code Mark Certificate 30030 - Thermakraft Covertek 405™ Absorbent Breathable Roof Underlay
Code Mark Certificate 30028 - Thermakraft Covertek 407™ Absorbent Breathable Roof Underlay
Code Mark Certificate 1002 - Thermakraft Watergate Plus™ Wall Underlay

Manufacturer/supplier contact details

Company:	Thermakraft Ltd
Web:	www.thermakraft.co.nz
Email:	info@thermakraft.co.nz
Telephone:	0800 806 595

Warranties

1.5 WARRANTY - MANUFACTURER/SUPPLIER

Warrant this work under normal environmental and use conditions against failure of materials and execution. Thermakraft Ltd warrant performance of products if design and installation comply with relevant technical literature, NZBC, and recognised industry Codes of Practice. Copy of Thermakraft ™ Product Warranty available on request.

Requirements

1.6 INSTALLATION SKILL LEVELS

Installers to be experienced in the installation of Thermakraft ™ products and familiar with Thermakraft ™ technical literature and the related documents listed in this design i.e. NZMRM CoP NZ Metal Roof and Wall Cladding Code of Practice.

1.7 QUALIFICATIONS WORKERS - LICENSED UNDER STATUTE

Workers and supervisors to be appropriately qualified to applicable legislative requirements. Refer to 1270 CONSTRUCTION for additional requirements relating to qualifications.

1.8 NO SUBSTITUTIONS

Substitutions are not permitted to any specified materials, or associated products, components or accessories.

Compliance information

1.9 INFORMATION REQUIRED FOR CODE COMPLIANCE

Provide the following compliance documentation:

- Applicators approval certificate from the manufacturer / importer / distributor
- Manufacturer / supplier warranty
- Installer / applicator warranty
- Producer Statement - Construction from the applicator / installer
- Producer Statement - Construction Review from an acceptable suitably qualified person
- Other information required by the BCA in the Building Consent Approval documents.

Performance - general

1.10 SURFACE FIRE PROPERTIES FOR LININGS

Group Number to NZBC C/AS2, Table 4.3. Refer to SELECTIONS.

Quality control and assurance

1.11 INSPECTIONS

~

2 PRODUCTS

Materials

Damp Proof Course

2.1 SUPERCOURSE 500™ DPC

Supercourse 500™, high-impact polyethylene film to AS/NZS 2904 and embossed on both sides. Thickness 500 microns minimum, manufactured for use as a damp-proof course and concealed flashings around doors and windows and to BRANZ Appraisal 329. Refer to SELECTIONS for type of joining tape.

Damp Proof Membrane

2.2 THERMATHENE BLACK™ DPM (MEDIUM DUTY)

Thermathene Black™, a minimum of 250 microns polyethylene film. Complies with NZS 3604, 7.5.4, Damp-proof membrane, to NZBC E2/AS1. Refer to SELECTIONS for type of joining tape.

Wall underlays

Wall underlays - synthetic, fire-retardant, air barriers

2.3 WATERGATE PLUS ™ SYNTHETIC WALL UNDERLAY

Watergate Plus™, specifically designed as a wall underlay. Absorbent breathable spun bonded non-woven polyolefin type building membrane, coated with a water resistant vapour permeable film. A fire retardant membrane, with Flammability Index of ≤ 5, when tested to AS 1530.2. The product has a BRANZ Appraisal 695, and is included in the Thermakraft One Wrap System™ BRANZ Appraisal 962.

Roof underlays

Roof underlays - bituminous, self-supporting

2.4 THERMAKRAFT 215™ BITUMINOUS ROOF UNDERLAY

Thermakraft 215™, bituminous self-supporting roof underlay to NZS 2295.

Window and joinery flashing tape

2.5 ALUBAND™ BITUMINOUS FLASHING TAPE

Thermakraft Aluband™ window flashing tape consists of synthetic faced reinforced bituminous window sealing tape, in widths of 75mm, 150mm and 200mm. Used to repair damaged bituminous underlays. Bitumen may react to sealants, always check compatibility. Thermakraft Corner Moulds must be used. Exposure 42 days. Install from 5°C. BRANZ Appraisal 878, and is included in the Thermakraft One Wrap System™ BRANZ Appraisal 962.

Joining tape

2.6 WHITE GENERAL PURPOSE TAPE™

Thermakraft White General Purpose Tape™ is a medium duty acrylic tape is commonly used on synthetic underlays, damp proof and for sealing edges of vapour control layers. NOT to be used as a flashing tape. Suitable for joining and sealing underlays, foils and membranes.

Accessories

2.7 STUDSTRAP™ HEAVY DUTY STUD STRAP

Thermakraft StudStrap™, 25mm wide black polythene strap. Heavy duty, offering greater resistance to splitting.

3 EXECUTION

Conditions

3.1 DELIVERY, STORAGE & HANDLING OF PRODUCTS

Refer to 1270 CONSTRUCTION for requirements relating to delivery, storage and handling of products.

3.2 ROUTINE MATTERS

Refer to 1250 TEMPORARY WORKS & SERVICES for protection requirements.
Refer to 1270 CONSTRUCTION for requirements relating to defective or damaged work, removal of protection and cleaning.

3.3 PRE-INSTALLATION REQUIREMENTS

Check work previously carried out and confirm it is of the required standard for this part of the work.
Carry out remedial work identified before laying underlay.
Moisture content: ~% maximum

3.4 GENERAL REQUIREMENTS

Design application and installation of Thermakraft Building products to NZBC E2/AS1, BRANZ Appraisals, Thermakraft Technical Literature and Industry Codes of Practice.

Application generally

3.5 STANDARDS AND TOLERANCES

Refer to the general section 1270 CONSTRUCTION for general requirements.

Application DPC

3.6 DPC TO LOSP/CCA TREATED TIMBER

Lay Supercourse 500™ DPC under LOSP or CCA treated bottom plate of all timber framed walls on concrete, in a single layer with 50mm overlaps at joints to provide a waterproof barrier.

3.7 DPC TO TIMBER / STEEL

Lay Supercourse 500™ under the bottom plate of all timber / steel framed walls on concrete, in a single layer with 50mm overlaps at joints to provide a waterproof barrier.
Refer to SELECTIONS for type.

3.8 DPC TO MASONRY AND BRICK VENEER

Lay Supercourse 500™ along based of cavity and fix top edge to studs with galvanized clouts. Turn DPC out over concrete rebate under bottom course of veneer.

Application - DPM

3.9 DPM TO CONCRETE FLOOR

Lay DPM under concrete floor substrate over sand blinding, in a single layer with 150mm overlaps at joints to provide a waterproof barrier. Refer to SELECTIONS for type. Tape all joints and penetrations with Thermakraft ™White General Purpose Tape™ 60mm.

Application - wall underlay

3.10 WALL UNDERLAY

Fix horizontally to outside face of framing in true alignment, with succeeding sheets overlapping 150mm to NZBC E2/AS1, 9.1.7, Wall underlay, and refer to Thermakraft for requirement for fastenings. Fix to Thermakraft Technical Data specifications. Scribe neatly around penetrations and openings to leave no gaps. Flash all openings and tape all penetrations in accordance with Thermakraft Installation Guides. Keep clean, undamaged and without visible weather deterioration until closed in.

3.11 INSTALL STUD STRAPS

Over underlay, install stud straps horizontally at 300mm centres, draw taut and fix to studs with stainless steel staples.

3.12 METAL CLADDING ON TIMBER CAVITY BATTENS

Fix strip of DPC Thermakraft Supercourse 500 ™ as a separator between the timber and metal cladding.

Application - roof underlay

3.13 ROOF UNDERLAY

Lay vertically over purlins on wire netting with a 150mm side lap. Fix securely to purlins with galvanized fixings. Lay underlay to avoid excessive dishing between purlins. When used vertically, limit individual runs to 10 metres for bituminous underlays. Do not lay vertically on roof pitches under 10° without support.

Horizontally lay across the rafter/trusses starting at the gutter line with succeeding sheets in true alignment and lapping 150mm. Scribe around and fit neatly to all penetrations and avoid prolonged exposure by installing the roof immediately.

Completion

3.14 COMPLETION MATTERS

Refer to 1270 CONSTRUCTION for completion requirements and if required commissioning requirements.

4 SELECTIONS

For further details on selections go to www.thermakraft.co.nz.
Substitutions are not permitted to the following, unless stated otherwise.

Performance

4.1 SURFACE FIRE PROPERTIES

Group Number	Panel/Finish	Location
~	~	~

Damp Proof Course

4.2 THERMAKRAFT SUPERCOURSE 500™ DPC

Location: ~
Type: Supercourse 500™
Joining tape: ~

Damp Proof Membrane

4.3 THERMAKRAFT THERMATHENE BLACK™ DPM

Location: ~
Type: Thermathene Black™
Joining tape: ~

Wall underlays - synthetic, fire-retardant, air barriers

4.4 THERMAKRAFT WATERGATE PLUS™ WALL UNDERLAY

Location: ~
Type: Thermakraft Watergate Plus™
Joining tape: ~
Flashing tape: ~
Accessories: ~

Roof underlays - bituminous, self-supporting

4.5 THERMAKRAFT 215™ BITUMINOUS ROOF UNDERLAY

Location:	~
Type:	Thermakraft 215™
Joining tape:	~
Flashing tape:	~
Accessories:	~

Window and joinery flashing tape

4.6 THERMAKRAFT ALUBAND™ FLASHING TAPE

Location:	~
Sill/head tape:	150mm Thermakraft Aluband™ (for 90mm framing) 200mm Thermakraft Aluband™ (for 140mm or 150mm framing)
Sill corners:	Thermakraft Corner Mould™
Head corners:	75mm Thermakraft Aluband™ butterfly corners

Joining tape

4.7 THERMAKRAFT WHITE GENERAL PURPOSE TAPE™

Location:	~
Joining tape:	60mm Thermakraft White General Purpose Tape™

Stud straps

4.8 THERMAKRAFT STUDSTRAP™ STUD STRAPS

Location:	~
Type:	Thermakraft Studstrap, 25mm black polythene woven tape

4223SC SHADOWCLAD® PLYWOOD CLADDING

1 GENERAL

This section relates to the use of Carter Holt Harvey Plywood Ltd (CHH PLY) Shadowclad® range of plywood exterior cladding on a drained cavity.
It includes:

- Shadowclad® Natural Texture
- Shadowclad® Natural Groove
- Shadowclad® Ultra Texture
- Shadowclad® Ultra Groove

1.1 RELATED WORK

Refer to the appropriate timber framing section for timber framing.
Refer to the appropriate painting section for applied finishes.

1.2 ABBREVIATIONS AND DEFINITIONS

Refer to the general section 1232 INTERPRETATION & DEFINITIONS for abbreviations and definitions used throughout the specification.

The following abbreviations apply specifically to this section:

FSC®	Forest Stewardship Council®
COC	Chain of Custody

Documents

1.3 DOCUMENTS

Refer to the general section 1233 REFERENCED DOCUMENTS. The following documents are specifically referred to in this section:

NZBC E2/AS1	External moisture
AS/NZS 1604.1	Preservative-treated wood-based products - Part 1: Products and treatment
AS/NZS 2269.0	Plywood - Structural - Specifications
NZS 3602	Timber and wood-based products for use in building
NZS 3604	Timber-framed buildings

Window & Glass Association NZ (WGANZ) documents:

Window Installation Guide	Guide to Window Installation as described in E2/AS1 Amendment 7

Documents listed above and cited in the clauses that follow are part of this specification. However, this specification takes precedence in the event of it being at variance with the cited document.

1.4 MANUFACTURER'S DOCUMENTS

Carter Holt Harvey Plywood Ltd documents relating to work in this section are:
Shadowclad® sITe APP
Shadowclad® Specification and Installation Guide for Cavity Construction (May 2018)
Shadowclad® Specification & Installation Guide For Mixed Cladding Systems On Cavity Construction (May 2018)
Shadowclad® Safety Data Sheets (May 2018)
BRANZ Appraisal 764 - Shadowclad® Ventilated Cavity Cladding System
FSC Certification available on request for W8.1 Plywood FSC Mix
CHH Tokoroa FSC-C012019 SCS-COC-001316 Controlled Wood SCS-CW-001316 - expires 5 June 2023

Copies of the above literature are available at

Web:	www.shadowclad.co.nz
Telephone:	0800 326 759

Requirements

1.5 QUALIFICATIONS

Workers to be experienced, competent trades people familiar with the materials and techniques specified.

1.6 NO SUBSTITUTIONS

Substitutions are not permitted to any of the specified systems, components and associated products listed in this section.

1.7 INFORMATION FOR OPERATION AND MAINTENANCE

Refer to the general section 1234 DOCUMENTATION for provision of the following general operation and maintenance information as electronic PDF format documents:
Shadowclad® Specification and Installation Guide for Cavity Construction.

Performance

1.8 APPRAISED

Shadowclad® Ventilated Cavity Cladding Systems is BRANZ Appraised (BRANZ Appraisal 764) with scope limitations. Shadowclad® Ventilated Cavity details were tested to E2/VM1 as part of the technical investigations carried out.

1.9 PERFORMANCE

Accept responsibility for the weather-tight performance of the completed cladding system, including all penetrations.

2 PRODUCTS

Materials

2.1 SHADOWCLAD® ULTRA TEXTURE CLADDING

Radiata pine veneer 12mm (nom) ply sheet to AS/NZS 2269.0. Treated LOSP Azole H3.1 or CCA H3.2 to AS/NZS 1604.1. Pre-primed bandsawn surface finish and vertical ship lap joint. Standard sheet cover width is 1200mm. Standard sheet lengths are 2440mm and 2745mm.

2.2 WALL UNDERLAYS

For flexible wall underlays, rigid wall underlays and rigid air barriers, refer to the appropriate separate section(s).

2.3 EXTERIOR CAVITY WALL BATTENS

Radiata pine battens, nominal 20mm thick, 45mm wide and height to match timber framing studs. To NZS 3602, table 1, reference 1D.10.
Refer **Shadowclad**® Specification and Installation Guide for Cavity Construction.

2.4 EXTERIOR CAVITY CLOSER/VERMIN-PROOFING

Shadowclad® cavity base closure with upstand to two sides and 5mm diameter holes at 15mm centres to base. Available in aluminium (natural anodised) and stainless steel. Refer **Shadowclad**® Specification and Installation Guide for Cavity Construction. To NZBC E2/AS1: Vermin-proofing clause 9.1.8.3 and Cavity base closer figure 66.

2.5 EXTERIOR COVER BATTENS & TRIM

Radiata pine battens, trim and covers to profiles as required by the cladding manufacturer. Clears grade or finger-jointed, treated H3.1.

- cover battens minimum 65mm x 18mm with 6mm x 6mm weather grooves
- internal corner/soffit battens 18mm x 18mm with back corner chamfered

Refer **Shadowclad**® Specification and Installation Guide for Cavity Construction.

Components

2.6 NAILS

Refer to the **Shadowclad**® Specification and Installation Guide for Cavity Construction fixing requirements for size and use. Refer to SELECTIONS for material and type.

- Minimum 60mm x 2.8mm. (hand driven)

When using rigid air barriers, increase fixing length by at least the thickness of that panel. Refer to power tool manufacturers for equivalent power driven nail size.

2.7 SCREWS

Refer to the **Shadowclad**® Specification and Installation Guide for Cavity Construction fixing requirements for size and use. Refer to SELECTIONS for material and type.

- Minimum No. 8 x 65mm countersunk screws.

When using rigid air barriers, increase fixing length by at least the thickness of that panel.

2.8 FLASHINGS

Shadowclad® flashing range either; aluminium mill finish or anodised, or G304 stainless steel. Note, lengths and finish do vary for aluminium profiles, but stainless steel profiles are all 3000mm long.
To NZBC E2/AS1, Table 20 **Material Selection**. Refer to the **Shadowclad**® Specification and Installation Guide for Cavity Construction.

2.9 FLASHING TAPE

Flexible flashing tape to NZBC E2/AS1, 4.3.11 Flexible flashing tape, UV resistant for exposed applications.

Accessories

2.10 SEALANT

Refer to the plywood manufacturer's requirements for elastomeric sealant to waterproof penetrations.

2.11 TREATMENT OF SHEET CUTS

Soudal Metalex Ready to Use, clear colour product.

3 EXECUTION

Conditions

3.1 DELIVERY, STORAGE & HANDLING OF PRODUCTS

Refer to 1270 CONSTRUCTION for requirements relating to delivery, storage and handling of products.

3.2 ROUTINE MATTERS

Refer to 1250 TEMPORARY WORKS & SERVICES for protection requirements. Refer to 1270 CONSTRUCTION for requirements relating to defective or damaged work, removal of protection and cleaning.

3.3 TIMBER FRAMING

Ensure it is to NZS 3604 and the manufacturer's requirements.

3.4 SUPPORT

Fully support all edges and joints.

3.5 VERTICAL JOINT EXPANSION - SHADOWCLAD® TEXTURE

Provide 2-3mm gap at all vertical edges of cladding for sheet expansion.
Maintain 2mm minimum expansion gap in the vertical shiplap joint to create an adequate expansion allowance. Refer **Shadowclad**® Specification and Installation Guide for Cavity Construction

3.6 HORIZONTAL JOINT EXPANSION - SHADOWCLAD® 'Z' FLASHING

For horizontal joints using **Shadowclad**® 'Z' flashings, provide a horizontal 9mm gap between the 'Z' flashing and the sheet above at the outside face to create an adequate expansion allowance. Refer **Shadowclad**® Specification and Installation Guide for Cavity Construction.

3.7 FRAMING MOISTURE CONTENT

Maximum moisture content 20% to NZS 3602. for general framing and cavity battens

Application

3.8 DRAINED CAVITY - 600 STUD SPACING

Confirm that drained cavity is installed as follows with 600mm stud spacing and 800mm max nog spacing, or 600mm max nog spacing when using vertical cover battens.
20mm nominal thickness drained cavity to NZBC E2/AS1: 9.0 **Wall claddings**, with battens over underlay or rigid air barrier. Vertical cavity battens fixed at 300 centres, battens to each stud and one in between the two studs fixed to top and bottom plates and nogs. Do not fix the cladding to the battens fixed between studs as it is only to restrain the building underlay and insulation from bulging into the drained cavity. Top of the cavity is to be sealed. Cavity closer/vermin proofing should be used at the base of walls, open horizontal (or raking) junctions, over openings (windows, meters etc). Horizontal cavity battens should not be used except when closing off the top of a cavity from all roof spaces and enclosed soffits to prevent entry of moist air.
Cavity spacers (i.e. short pieces of cavity batten) may be used to support the bottom sheet edge (or provide intermediate support where required eg above window openings) but must allow water drainage to the outside. The cavity spacers must be fixed at a 5˚ minimum slope (to horizontal) with a 50mm minimum air gap at either side.
Refer **Shadowclad**® Specification and Installation Guide for Cavity Construction.

3.9 PENETRATIONS

Confirm that exterior wall openings have been prepared ready for the installation of all window and door frames and other penetrations through the cladding. Required preparatory work includes the following:

- wall/cladding underlay to openings finished and dressed off ready for the installation of window and door frames and other penetrations
- claddings neatly finished off to all sides of openings
- installation of flashings (those required to be installed prior to installation of penetrating elements).

Refer to the WGANZ Window Installation Guide. This covers the WGANZ recommendations on the preparation of window/door openings, minimum clearances between rough openings and the window/door frame, dressing of the wall underlay into the prepared opening, application of flexible flashing tape to the sill and top corners of the opening, installation of window/door frames and flashings, sealing of the window/door frame into the opening to create a pressure equalisation cavity, installation of flashings and the maintenance of appropriate clearances between the frame and the surrounding construction.

3.10 TREATING CUT EDGES

Treat cut edges of plywood with Soudal Metalex Ready to Use to Soudal requirements, before fixing. Cut edges must be placed at the top of the sheet to avoid rain drips soaking in to cut end grain.

3.11 PRIMING EDGES & REAR OF SHEET

Before installation prime the bottom edges and back (rear) of sheets to a height of 150mm. Refer **Shadowclad**® Specification and Installation Guide for Cavity Construction.

3.12 PRE-PAINTING OR STAINING

Before installation pre-paint or pre-stain as appropriate, up to one finishing coat on exposed edges and surfaces that will be difficult to paint after installation. Refer to Metalex Ready to Use datasheet for specific requirements.

3.13 INSTALL SHADOWCLAD® PLYWOOD CLADDING

Install to the requirements of **Shadowclad**® Specification and Installation Guide for Cavity Construction. Ensure sheets are installed vertically, do not install horizontally. Use a Shadowclad Stick to determine required clearances.

3.14 FIXING SHADOWCLAD® PLYWOOD CLADDING

Fix at 150mm maximum centres at sheet edges and no closer than 7mm to the sheet edge. Fix intermediate supports at 300mm maximum centres to studs and nogs. Sheets to be nailed off independently of each other, with nailing pattern and ship lap joint nailing to detailed requirements of **Shadowclad**® Specification and Installation Guide for Cavity Construction (in particular refer details SC003, SC006, SC006A, SC008, SC008A). Do not fix through grooves.
Finish fixings flush.
Refer **Shadowclad**® Specification and Installation Guide for Cavity Construction.

3.15 INSTALL COVER BATTENS AND TRIMS

Install as detailed on the drawings and in accordance with the cladding manufacturer's requirements.
Refer **Shadowclad**® Specification and Installation Guide for Cavity Construction.

3.16 INSTALLING FLASHINGS GENERALLY

Install flashings and covers as detailed on the drawings and in accordance with **Shadowclad**® recommended details. Refer **Shadowclad**® Specification and Installation Guide for Cavity Construction.

3.17 INSTALLING SHADOWCLAD® 'Z' FLASHINGS - CONTINUOUS CAVITY

Install **Shadowclad**® standard Horizontal 'Z' flashing with the upstand over the cavity battens to **Shadowclad**® recommended details and as detailed on the drawings. Refer **Shadowclad**® Specification and Installation Guide for Cavity Construction.

3.18 INSTALLING SHADOWCLAD® 'Z' FLASHINGS - N0N-CONTINUOUS CAVITY

Install **Shadowclad**® Inter-Storey 'Z' flashing with the upstand under the cavity battens along with **Shadowclad**® Cavity Base Closure, to **Shadowclad**® recommended details and as detailed on the drawings.
Refer **Shadowclad**® Specification and Installation Guide for Cavity Construction.

3.19 JOINTING & TERMINATING SHADOWCLAD® 'Z' FLASHINGS

Horizontal 'Z' flashings shall be jointed as follows:

- Butt jointed over back flashing for aluminium flashings
- Overlapped by 150mm for stainless steel flashings

Horizontal 'Z' flashings shall have ends terminated as follows:

- 50 mm strip of neutral cure silicon or
- Stop ends
- End terminations not required butting into Shadowclad® metal corner flashings.

Refer **Shadowclad**® Specification and Installation Guide for Cavity Construction.

3.20 COMPLETE

Ensure the work is complete with all flashings, finishings and trim properly installed so the cladding system is completely weathertight.

Completion & Commissioning

3.21 COMPLETION MATTERS

Refer to 1270 CONSTRUCTION for completion requirements and if required commissioning requirements.

3.22 COMPLETION - TESTS & CERTIFICATION

Refer to 1270 CONSTRUCTION for general test and certification requirements at completion.
~

4 SELECTIONS

For further details on selections go to: www.shadowclad.co.nz
Substitutions are not permitted to the following, unless stated otherwise.

4.1 SHADOWCLAD® ULTRA TEXTURE PLYWOOD CLADDING

Cladding type:	Shadowclad® Ultra Texture
Treatment:	H3.2 CCA
Finish:	Paint
Prime:	~ for exposed edges (refer to appropriate painting section)
Thickness:	12mm (nominal)

4.2 CAVITY BATTENS

Timber species:	Radiata pine
Timber grade:	Merchantable
Treatment:	H3.1

Refer **Shadowclad**® Specification and Installation Guide for Cavity Construction.

4.3 SHADOWCLAD® FLASHINGS - ALUMINIUM

Refer **Shadowclad**® Specification and Installation Guide for Cavity Construction.

Location	Flashing	Finish
Cavity base:	Cavity Base Closure	Natural Anodised (only)
Horizontal joints:	Horizontal Z Back	Mill (only)
Horizontal joints:	Horizontal Z	~
Inter storey junction:	Inter-Storey Z Back	Mill (only)
Inter storey junction:	Inter-Storey Z	~
Internal angle:	Internal 90 Angle	Natural Anodised (only)
Internal angle	Internal W Angle	~
Internal angle	Large Internal W Angle	~
External angle:	External Box Angle	~
External angle:	Large External Box Angle	~
Vertical details	Vertical Top Hat	~

Note: If powder coating is required, contractor to organise coating separately (not by Carter Holt Harvey Plywood Ltd)

Fixings	Size	Material
Flat head nail	40mm x 2.5mm	Galvanized

4.4 SHADOWCLAD® FLASHINGS - STAINLESS STEEL

Refer **Shadowclad**® Specification and Installation Guide for Cavity Construction.

Location	Flashing
Cavity base:	Cavity Base Closure
Horizontal joints:	Horizontal Z
Inter storey junction:	Inter-Storey Z
Internal angle:	Internal 90 Angle
Internal angle	Internal W Angle
External angle:	External Box Angle

Fixings	Size	Material
Flat head nail	40mm x 2.5mm	Stainless Steel

4.5 FASTENINGS FOR CLADDING - GALVANIZED

Location: ~
Type/size: ~
Material: Galvanized
Note: Use with H3.1 treated timber and aluminium flashings only, increase length of fixing if rigid air barriers are used. Do not use with Stainless Steel flashings or H3.2 timber.
Refer **Shadowclad**® Specification and Installation Guide for Cavity Construction.

4.6 FASTENINGS FOR CLADDING - STAINLESS STEEL

Location: ~
Type/size: ~
Material: Stainless Steel
Note: Must be used with H3.2 treated timber and/or Stainless steel flashings only, increase length of fixing if rigid air barriers are used. Do not use with aluminium flashings.
Refer **Shadowclad**® Specification and Installation Guide for Cavity Construction.

4.7 COVER BATTENS AND TRIMS

Location	Material	Size	Finish
~	~	~	~ to match cladding

Finishing

4.8 PAINTING

Refer to the appropriate painting section(s).
Panels are to be Brush coated within 3 months of installation, over 3 months ensure panels are prepare to **Shadowclad**® Specification and Installation Guide for Cavity Construction, Section 5.0.
For paint and film forming stains ensure cover is at least 90 microns (Min 30 microns/coat). For penetrating stains follow stain manufacturer's requirements.
Refer **Shadowclad**® Specification and Installation Guide for Cavity Construction.

4311RI ROOFING INDUSTRIES PROFILED METAL ROOFING

1 GENERAL

This section relates to the supply and fixing of **Roofing Industries** profiled roofing complete with accessories.

1.1

1.2 ABBREVIATIONS

The following abbreviations are used throughout this part of the specification:

BMT	Base metal thickness
NZMRM	New Zealand Metal Roofing Manufacturers Inc
MS	Modified silicone
LBP	Licensed Building Practitioner

Documents

1.3 DOCUMENTS

Refer to the general section 1233 REFERENCED DOCUMENTS.
The following documents are specifically referred to in this section:

NZBC E2/AS1	External Moisture
NZBC G12/AS1	Water Supplies
AS/NZS 1170.2:2011	Structural design actions - Wind actions
AS/NZS 1665	Welding of aluminium structures
AS/NZS 1734	Aluminium and aluminium alloys - flat sheet, coiled sheet and plate
AS/NZS 1554.6	Welding stainless steels for structural purposes
ISO/TS 15510	Stainless steels - Chemical composition
AS 1397	Continuous hot-dip metallic coated steel sheet and strip - Coatings of zinc and zinc alloyed with aluminium and magnesium
AS 3566	Self-drilling screws for the building and construction industries
NZS 3604	Timber-framed buildings
ISO 9223	Corrosion of metals and alloys - Corrosivity of atmosphere - Classification determination and estimation
NZMRM CoP	NZ Metal Roof and Wall Cladding Code of Practice

Documents listed above and cited in the clauses that follow are part of this specification. However, this specification takes precedence in the event of it being at variance with the cited document.

1.4 MANUFACTURER/SUPPLIER DOCUMENTS

Manufacturer's and supplier's documents relating to this part of the work:
Roofing Industries product literature including:

- Profile Technical Summary
- Selection Guide

Copies of the above literature are available from Roofing Industries product list.

Web:	www.roof.co.nz
Email:	techinfo@roof.co.nz
Telephone:	0800 844 822

Warranties

1.5 WARRANTY - MANUFACTURER/SUPPLIER

Provide a material manufacturer/supplier warranty:

- Provide this warranty on the Coil Manufacturers/Roofing Industries products standard Warranty Form
- Commence the warranty from the date of practical completion of the contract works

Refer to the general section 1237 WARRANTIES for additional requirements.

1.6 WARRANTY - INSTALLER/APPLICATOR

Provide an installer/applicator warranty:
5 years for workmanship

- Provide this warranty on the metal roofing installers standard warranty form.
- Commence the warranty from the date of practical completion of the contract works.

NOTE: Include a copy of the Roofing Industries maintenance requirements with the warranty. Refer to the general section 1237 WARRANTIES for additional requirements.

Requirements

1.7 QUALIFICATIONS

Roof Installers shall be experienced, competent roofers familiar with **Roofing Industries** products. And for Restricted Building Work shall also be, an LBP or supervised by an LBP.

Carry out work with experienced, competent installers familiar with the products being used and preferably with appropriate qualifications such as the National Certificate in Metal Roofing and Cladding.

1.8 NO SUBSTITUTIONS

Substitutions are not permitted to any specified system, or associated components and products.

Performance - Wind

1.9 DESIGN PARAMETERS - NON SPECIFIC DESIGN

Building wind zone High
Refer to **Roofing Industries** for "Wind Load Span Design Graphs" for load parameters.

1.10 FIXINGS, WIND

Design and use the fixings/fixing pattern appropriate for the wind design parameters and NZMRM CoP. Refer to **Roofing Industries** Profile Technical Summary for the selected profile. Allow for specific loadings at corners and the periphery of the roof, where localised pressure factors apply. Fixing pattern to also take into account fixing method and purlin spacings.

Performance - General

1.11 PERFORMANCE

Install roofing materials in accordance with the NZMRM CoP, and **Roofing Industries** Profile Technical Summary for the selected profile, to form a weather-tight performance for the completed roofing system, including all penetrations through the roof and junctions with walls and parapets.

1.12 DRINKING WATER

Roofing for collecting potable water to NZBC G12/AS1.

1.13 CO-ORDINATE

Co-ordinate to ensure substrate and preparatory work is complete and other work programmed in the order required for access and completion of the roof. Ensure that all necessary members are positioned so that flashings can be fastened at both edges through the roof profile or cladding to the primary structure.

2 PRODUCTS

2.1 STEEL - GALVANIZED, UNPAINTED

Formability steel sheet, G550 for roll forming or G300 for flashings, coated to AS 1397.

2.2 STEEL - HOT-DIPPED ALUMINIUM/ZINC ALLOY COATED, UNPAINTED

Formability steel sheet, G550 for roll forming or G300 for flashings, coated to AS 1397.

2.3 STEEL - HOT-DIPPED ALUMINIUM/ZINC ALLOY COATED, PRE-FINISHED

Formability steel sheet, G550 for roll forming or G300 for flashings, coated to AS 1397.

2.4 STEEL - HOT-DIPPED ALUMINIUM/ZINC/MAGNESIUM COATED, UNPAINTED

Formability steel sheet, G550 for roll forming or G300 for flashings, coated to AS 1397.

2.5 STEEL - HOT-DIPPED ALUMINIUM/ZINC/MAGNESIUM COATED, PRE-FINISHED

Formability steel sheet, G550 for roll forming or G300 for flashings, coated to AS 1397.

2.6 STAINLESS STEEL

Stainless steel sheet manufactured to ASTM A240 and ASTM A480. Welding to AS/NZS 1554.6.

2.7 ALUMINIUM

Aluminium alloy series 5000 temper H34 for flashings or H36 for roll forming to suit application.

2.8 ALUMINIUM, PRE-FINISHED

Aluminium alloy series 5000 temper H34 for flashings or H36 for roll forming to suit application coated to AS/NZS 2728.

2.9 FASTENERS GENERALLY

Fixings and fasteners are to be compatible with all materials, the environment and meeting the requirements of the NZ Building Code. Installation is to be in accordance with E2/AS1 and/or the NZMRM CoP and Roofing Industries Profile Technical Summary.
For fixing patterns refer to Roofing Industries Profile Technical Summary for the selected profile.

2.10 FIXING SCREWS

To AS 3566. Screws appropriate to the roofing material and the supporting structure, as required by Roofing Industries and with a Class 4 or 5 durability and not less than the material being fixed. Screws into timber to penetrate by minimum 30mm. Screw fasteners to be head stamped identifying the manufacturer and class. Refer to SELECTIONS.

2.11 RIVETS

Sealed aluminium, minimum diameter 4.0mm. Refer to Roofing Industries for requirements.

Components

2.12 FLASHINGS GENERALLY

To E2/AS1, 4.0, **Flashings**.
Formable grade 0.55 BMT for galvanized, aluminium/zinc, aluminium/zinc/magnesium - coated and pre-painted steel, and 0.70 BMT or 0.90 BMT for folded aluminium (or 0.7mm for small folded aluminium flashings) to the same standards as the profiled sheets, notched where across profile or provided with a soft edge.

2.13 FLASHINGS TO VERGE, RIDGE AND HIP

To E2/AS1, 4.0, **Flashings**.
Supplied by the roofing manufacturer to match or to suit the roofing.

2.14 BOOT FLASHINGS

Generally to E2/AS1, 8.4.17 **Roof penetrations** (note; E2/AS1, Figure.54 **Soaker flashing for pipe penetration**, has an error, use as guide only).
EPDM proprietary pipe flashing laid on 45º bias to roofing, with over-flashing (soaker flashing) if required.
A boot flashing should be positioned so that it dams a roofing pan no more than 50%, if this cannot be avoided use an over-flashing back to the ridge and fix the boot flashing to that.

2.15 ALUMINIUM FLASHINGS - WELDED

Aluminium alloy series 5000 temper H34 minimum thickness 1.6mm BMT to AS/NZS 1734.
Aluminium welding to AS/NZS 1665.

2.16 STAINLESS STEEL FLASHINGS - WELDED

Welded stainless steel flashings shall be minimum thickness BMT 1.2mm and grade 304 or 316 stainless steel in accordance with Table 1 of ISO/TS 15510. Welding to AS/NZS 1554.6.
Refer to SELECTIONS for details.

Accessories

2.17 WIRE NETTING AND SAFETY MESH

Refer to 4161 UNDERLAYS, FOIL AND DPC.

2.18 UNDERLAY AND REFLECTIVE FOIL

Refer to 4161 UNDERLAYS, FOIL AND DPC for roof underlays.

2.19 PLASTIC ROOFING

Refer to 4312RI ROOFING INDUSTRIES PROFILED NATURAL LIGHTING.

2.20 SEALANT

Neutral curing MS sealant or polymer sealant as required by Roofing Industries and used as directed.

3 EXECUTION

Conditions

3.1 INSPECTION

Inspect the roof framing and supporting structure to ensure that it is complete and fully braced ready for roofing and free from any misalignments or protrusions that could damage the roofing.

3.2 FRAMING TIMBER MOISTURE

When continuous metal cladding etc. Runs along a long continuous timber member and is directly fixed to it, the timbers equilibrium moisture content (EMC) to be 18% or less. For flashings in this situation (sometimes called transverse flashings) the framing EMC to be maximum 16%, and preferably as low as 12%. Transverse flashings can be temporarily tacked in place and final fixing done when moisture content is acceptable.

3.3 STORAGE

Upon delivery visually inspect sheets for damage and accept packs of undamaged roofing. Reject all damaged material. Store on a level firm base clear of the ground, with packs well ventilated and completely protected from weather and damage. Do not allow moisture to build up between sheets. If sheet packs become wet, fillet or cross stack to allow air circulation and drying between sheets.

3.4 HANDLING

Do not drag sheets across each other or other materials. Avoid distortion and contact with damaging substances, including cement. Long lengths of roofing should be lifted onto the roof using an approved load spreading beam. Protect edges and surface finishes from damage, keep under cover and remove as the product is being installed. Use soft, flat sole shoes when fixing and for all other work on the roof. Walk along the purlin line whenever possible.

3.5 SEPARATION

Isolate dissimilar materials (metals and non-metals) in close proximity as necessary by painting the surfaces or fitting separator strips of compatible materials. Place isolators between metals and treated timber and cement based materials. Do not use lead sheet or copper in contact with or allow water run-off onto galvanized or aluminium/zinc coated steel.

Application

3.6 WELDING ALUMINIUM FLASHINGS

Welding to be carried out by a welder qualified under AS/NZS 1665. Preparation and welding to comply with AS/NZS 1665. Finish welds smooth and without abrupt surface changes ready for coatings. Refer to SELECTIONS for BMT and coatings.

3.7 WELDING STAINLESS STEEL FLASHINGS

Weld stainless steel flashings to AS/NZS 1554.6. Preparation and welding to comply with AS/NZS 1554.6. Finish welds smooth and without abrupt surface changes ready for coatings. Refer to SELECTIONS for BMT and coatings.

3.8 FIX INSULATION

Refer to Thermal Insulation sections.

3.9 SET-OUT

Carefully set out with consideration of the position of side laps to take account of the prevailing wind and line of sight. Ensure all sheets are square and oversailing the gutter true to line. Check during fixing to eliminate creep or spread and string lines along purlin centres to keep fastenings in line.

3.10 END LAPS

End laps are not permitted, except where specifically detailed.

3.11 THERMAL MOVEMENT

Fix for Thermal Movement to Roofing Industries Profile Technical Summary for Selected Profile.

3.12 FIXING GENERALLY

Install and fix in accordance with the NZMRM CoP recommendations, and to Roofing Industries required fixing patterns and details for each area of the building roofing. Use only screws as required by Roofing Industries. Paint colour matched fixings and accessories before installation.

3.13 MARKING AND CUTTING

Use ink pen, chalk line or coloured pencil for marking roof sheets prior to cutting. Do not use lead pencil for marking Zincalume®, ZAM®, Colorsteel® and Colorcote®. Cut by shear only, using nibblers or hand snips. Remove all cutting and drilling debris from the roof.

3.14 FIX SHEETS

Fix sheets in place using the fastening system required by Roofing Industries for specified profiles, making due allowance for dynamic local wind pressures on the building and thermal movement in the sheet.

3.15 STOP ENDS AND DOWNTURNS

Form stop-ends at the upper end of sheets. Form downturns at the gutter line where the roof pitch is less than 8 degrees. Form using the required tools.

3.16 INSTALL FLASHINGS

Flash roof to parapets, walls and penetrations to detail. Flashings to be installed on timber framing with a moisture content of less than 20%. Where no detail is provided flash to NZMRM CoP recommendations and Roofing Industries and NZBC E2/AS1 requirements. Cut accurately and fix using sealant and rivets to detail and to Roofing Industries requirements to form a weatherproof cover. For visible flashings, plan joints/junction to take account of the aesthetic requirements.

3.17 USE OF SEALANTS

Select and use sealants only as recommended by Roofing Industries. Apply sealant in two narrow beads transversely across flashing intersections, close to the two edges. Avoid exposing sealant on outside surfaces.

3.18 FLASHING PENETRATIONS

Flash all penetrations through the roof. Fit pipe flashings with a proprietary collar flashing, with other penetrations flashed as detailed and to provide a weathertight installation. Ensure that flashings are set to avoid any ponding of water.

Completion & Commissioning

3.19 COMPLETION MATTERS

Refer to 1270 CONSTRUCTION for completion requirements and if required commissioning requirements.
NOTE: Leave this work complete with all necessary flashings, undercloaks, valleys, ridges and hips all properly installed as the work proceeds so the finished roof is completely weathertight.

4 SELECTIONS

For further details on selections go to www.roof.co.nz.
Substitutions are not permitted to the following, unless stated otherwise.

4.1 COATING SYSTEM - EXPOSURE ZONE B-C (CAT 1-3)

Project Exposure Zone B-C to NZS 3604, C 1-3 to ISO 9223.
Profile/location: ~
Base material: ~
Coating system: ~
Coating colour: ~

4.2 COATING SYSTEM - EXPOSURE ZONE D (CAT 4)

Project Exposure Zone D to NZS 3604, C 4 to ISO 9223.
Profile/location: ~
Base material: ~
Coating system: ~
Coating colour: ~

4.3 COATING SYSTEM - EXPOSURE ZONE E (CAT 5)

Project Exposure Zone E to NZBC E2/AS1, C 5 (C5I & C5M) to ISO 9223.

Profile/location:	~
Base material:	~
Coating system:	~
Coating colour:	~

4.4 ROOFING INDUSTRIES - CORRUGATE ROOFING

BMT/material:	~
Purlin material:	~
Fixing:	~

Accessories

4.5 UNDERLAY

Refer to RELATED section for wall underlay.

4.6 FLASHINGS - GENERALLY

Profile:	~
BMT/material:	~
Coating system:	To match roofing
Coating colour:	To match roofing

4.7 FLASHINGS - WELDED

Location:	~
Roofing profile:	~
Material:	~
BMT	~
Coating system:	To match roofing
Coating colour:	To match roofing

5113G GIB® PLASTERBOARD LININGS

1 GENERAL

This section relates to the supply, fixing and jointing of GIB® plasterboard linings and accessories to timber and steel framed walls and ceilings to form:

- standard systems
- superior finish quality systems
- bracing systems
- fire rated garage boundary wall systems
- wet area systems
- GIBFix® Framing systems

1.1

1.2 ABBREVIATIONS AND DEFINITIONS

Refer to the general section 1232 INTERPRETATION & DEFINITIONS for abbreviations and definitions used throughout the specification.

The following abbreviations apply specifically to this section:

AWCINZ	Association of Wall and Ceiling Industries New Zealand

Documents

1.3 DOCUMENTS

Refer to the general section 1233 REFERENCED DOCUMENTS. The following documents are specifically referred to in this section:

NZBC C/AS2	Protection from fire
NZBC E2/AS1	External moisture
AS 1397	Continuous hot-dip metallic coated steel sheet and strip - Coatings of zinc and zinc alloyed with aluminium and magnesium
AS/NZS 2588	Gypsum plasterboard
AS/NZS 2589	Gypsum linings - Application and finishing
NZS 3604	Timber-framed buildings
AS/NZS 4600:2005	Cold-formed steel structures
ISO 5660.1	Reaction-to-fire tests - Heat release, smoke production and mass loss rate - Part 1: Heat release rate (cone calorimeter method)
ISO 5660.2	Reaction-to-fire tests - Heat release, smoke production and mass loss rate - Part 2: Smoke production rate (dynamic measurement)
BRANZ Technical Paper P21	BRANZ Technical Paper P21: A wall bracing test and evaluation procedure (2010)
NASH	Residential and Low-Rise Steel Framing Part 1 2010 Design Criteria

1.4 MANUFACTURER/SUPPLIER DOCUMENTS

Manufacturer and Supplier documents relating to this part of the work.

	- GIB® Site Guide (September 2018) - GIB® Noise Control Systems (September 2017) - GIB® Fire Rated Systems (October 2018) - GIB Aqualine® Wet Area Systems (March 2007) - GIB Toughline® Aqua (July 2018) - GIB Ezybrace® Systems (2016) - GIB Ezybrace® Bracing Software - GIB Ezybrace® Systems (June 2011), with amendments (December 2014) - GIB Ezybrace® for Steel Frame Housing (NASH) Software (2011) - GIBFix® Framing System (2016) - GIB Rondo® Metal Ceiling Batten Systems - GIB-Cove® - GIB RocTape® - GIB Goldline™ Platinum Tape-on Trims (January 2006) - GIB UltraFlex® high impact corner mould (September 2004) - GIB® Tough Systems (Nov 2014)
BRANZ Appraisal 928 (2016)	GIB Ezybrace® Systems 2016
BRANZ Appraisal 427 (2007)	GIB Aqualine® Wet Area Systems
BRANZ Appraisal 928 (2016)	GIB Ezybrace® Systems 2016
GreenTag Certification	WWLCG001-001-A-2015 - GreenTag™ GreenRate / Level B for: - GIB® Standard (10mm & 13mm) - GIB Fyreline® (10mm, 13mm, 16mm & 19mm) - GIB Braceline® (10mm & 13mm) - GIB Noiseline® (10mm & 13mm) - GIB Toughline® (13mm) - GIB Wideline® (10mm & 13mm)

Copies of the above literature are available at:

Company:	Winstone Wallboards
Web:	www.gib.co.nz
Telephone:	0800 100 442

Requirements

1.5 NO SUBSTITUTIONS

Substitutions are not permitted to any specified GIB® systems, GIB® system components, GIB® plasterboard, associated GIB® products or GIB® accessories.

1.6 INSTALLER WORK SKILLS AND QUALIFICATIONS

GIB® plasterboard fixers and plasterers to be experienced competent workers, familiar with GIB® plasterboard lining systems installation and finishing techniques. Submit evidence of experience on request. For example:

- National Certificate of Interior Systems; or
- Certified Business member of AWCINZ.

Performance

1.7 INSPECTIONS AND ACCEPTANCE

Allow for inspection of the finished plasterboard surface:

- before applying sealer and
- before applying finish coatings or decorative papers,

so that after assessment of the type and/or angle of illumination and its effect on the completed decorative treatment, group approval and acceptance of the surface can be given.

1.8 BRACING REQUIREMENTS

Braced wall systems to NZS 3604 when tested to BRANZ Technical Paper P21, using:

- GIB Ezybrace® Systems (2016) and/or GIB Ezybrace® Bracing Software (2016)
- GIB Ezybrace® Systems (2011)
- GIB Ezybrace® for Steel Frame Housing (NASH) Software 2011 (to NASH Residential and Low-Rise Steel Framing Part 1 2010 Design Criteria)

Refer to drawings for location and type.

2 PRODUCTS

Materials

2.1 GIB® PLASTERBOARD

Gypsum plaster core encased in a face and backing paper formed for standard and water resistance use to AS/NZS 2588. Refer to SELECTIONS for location, type, thickness and finish.
GIB® Standard plasterboard
GIB Wideline® plasterboard
GIB Ultraline® high quality surface plasterboard
GIB Fyreline® fire resistant plasterboard
GIB Braceline® & GIB® Noiseline® dual purpose wall bracing & noise control plasterboard
GIB Aqualine® wet area plasterboard
GIB Toughline®
GIB Toughline® Aqua

Components

2.2 SCREWS

GIB® Grabber® drywall type screws as follows:

Grabber® type	**Used for fixing:**
High Thread	GIB Ezybrace® or Standard systems to timber
Self Tapping	Standard systems to light gauge steel or timber
Dual Thread Screws	GIBFix®, GIB Ezybrace®, or Standard systems, to light gauge steel or timber
Wafer Head Needle Tip	Light gauge metal to timber not directly under plasterboard
Pancake Head Drill Tip	Light gauge metal to light gauge metal directly under plasterboard

Refer to GIB® requirements for appropriate details.

2.3 TAPE ON TRIMS AND EDGES

GIB® Goldline™ tape-on trims
GIB® UltraFlex® high impact corner mould
GIB® Levelline® Tape on Trim

2.4 METAL ANGLE TRIMS

GIB® galvanized steel slim angle trims.

2.5 CONTROL JOINTS

GIB® Rondo® P35 control joints.
GIB® Goldline™ tape-on trims
GIB® plastic W-profile control joints.

Accessories

2.6 ADHESIVE

Timber frame and/or steel frame:
GIBFix® One ultra low VOC water based wallboard adhesive
GIBFix® All-Bond solvent based wallboard adhesive

2.7 JOINTING COMPOUND

Bedding compound:	GIB Tradeset®, GIB Lite Blue®, GIB MaxSet®, GIB ProMix® All Purpose, GIB Plus 4®
Finishing compound:	GIB ProMix® All Purpose, GIB® Trade Finish®, GIB® Trade Finish® Lite, GIB ProMix® Lite, GIB® U-Mix, GIB Plus 4®, GIB Trade Finish® Multi
Cove:	GIB-Cove® Bond

2.8 JOINTING TAPE

GIB® jointing tape.

2.9 GAP FILLER

GIB® Gap Filler ultra low VOC multi-purpose acrylic flexible filler

3 EXECUTION

Conditions

3.1 DELIVERY, STORAGE & HANDLING OF PRODUCTS

Refer to 1270 CONSTRUCTION for requirements relating to delivery, storage and handling of products.

3.2 ROUTINE MATTERS

Refer to 1250 TEMPORARY WORKS & SERVICES for protection requirements.
Refer to 1270 CONSTRUCTION for requirements relating to defective or damaged work, removal of protection and cleaning.

3.3 LEVELS OF PLASTERBOARD FINISH

Provide the selected plasterboard surfaces to the pre decorative levels of finish specified in AS/NZS 2589.

3.4 CONFIRM LEVELS OF PLASTERBOARD FINISH ACCEPTANCE

Before commencing work, agree in writing upon the surface finish assessment procedure towards ensuring that the quality of finish expectations are reasonable and are subsequently obtained and acceptable.

Do not apply decorative treatment until it is agreed in writing by the contractor, subcontractors and decorator that the specified plasterboard Level of Finish has been achieved.

"Levels of plasterboard finish" is a tool for specifying the required quality of finish when installing and flush stopping GIB® plasterboard **prior** to the application of a range of decorative finishes under various lighting conditions. Refer to **AS/NZS** 2589.

3.5 SUBSTRATE

Do not commence work until the substrate is plumb, level and to the standard required by the sheet manufacturer's requirements. Refer to GIB® Site Guide (September 2018).

3.6 TIMBER FRAME MOISTURE CONTENT

Maximum allowable moisture content to AS/NZS 2589 for timber framing at lining: 18% or less for plasterboard linings. Refer to NZBC E2/AS1 and GIB® Site Guide (Sept 2018).

3.7 PROTECTION

Protect surfaces; cabinetwork, fittings, equipment and finishes already in place from the possibility of water staining and stopping damage. Refer to GIB® Site Guide (Sept 2018).

Application

3.8 LINING WALLS AND CEILINGS GENERALLY

Form to GIB® Site Guide (September 2018). Ensure bulk insulation thickness shall not exceed that of the wall framing.

3.9 BOARD ORIENTATION

Minimise joints by careful sheet layout using the largest sheet sizes possible, and generally fixing horizontally. Where part sheets are required for various stud heights they should be positioned so the cut sheet is as low as possible to keep joints below eye level.

3.10 FORM WET AREA SYSTEMS

Form to GIB Aqualine® Wet Area Systems requirements.

3.11 FORM BRACING SYSTEMS

Form bracing systems to:

- GIB Ezybrace® Systems (2016)

3.12 FORM CONTROL JOINTS

Form control joints to GIB® Site Guide (September 2018) requirements.

3.13 INSTALL TAPE-ON TRIMS

Install to GIB® Goldline™ Tape-on trims literature and/or GIB® Ultraflex high impact corner mould literature.

Finishing

3.14 FINISHING GENERALLY

To GIB® Site Guide (September 2018) and AS/NZS 2589.

Completion & Commissioning

3.15 COMPLETION MATTERS

Refer to 1270 CONSTRUCTION for completion requirements and if required commissioning requirements.

4 SELECTIONS

Plasterboard

4.1 GIB® STANDARD SYSTEMS WALLS

Location	Plasterboard type / Lining requirements	Thickness	Finish Level
~	GIB® Standard plasterboard	10mm	
~	GIB® Standard plasterboard	13mm	
~	GIB Ultraline® plasterboard	10mm	
~	GIB Ultraline® plasterboard	13mm	

4.2 GIB® WATER RESISTANT SYSTEMS WALLS

Location	Plasterboard type / Lining requirements	Thickness	Finish Level
~	GIB Aqualine® plasterboard	10mm	
~	GIB Aqualine® plasterboard	13mm	
~	GIB Toughline® Aqua	13mm	

4.3 GIB® STANDARD SYSTEMS CEILINGS

Location	Plasterboard type / Lining requirements	Thickness	Finish Level
~	GIB® Standard plasterboard	13mm	
~	GIB Ultraline® plasterboard	13mm	

4.4 GIB® WATER RESISTANT SYSTEMS CEILINGS

Location	Plasterboard type / Lining requirements	Thickness	Finish Level
~	GIB Aqualine® plasterboard	13mm	
~	GIB Toughline® Aqua	13mm	

4.5 GIB® BRACING SYSTEMS

Refer to:

- GIB Ezybrace® Systems (2016)
- GIB Ezybrace® Systems (2011)

For bracing element location refer to drawn documentation.

Accessories

4.6 GIB® TAPE ON EDGE OR CORNER TRIMS

Brand/type: ~

4.7 GIB® EDGE PROFILES

Brand/type: ~

6700 PAINTING GENERAL

1 GENERAL

This section relates to the general matters related to painting work

1.1 RELATED WORK

Refer to 6711 PAINTING EXTERIOR for exterior paint systems.
Refer to 6721 PAINTING INTERIOR for interior paint systems.

1.2 ABBREVIATIONS

The following abbreviations are used throughout this part of the specification:

APAS	Australian Paint Approval Scheme
MPNZA	Master Painters New Zealand Association Inc.
VOC	Volatile organic compound

Documents

1.3 DOCUMENTS

Refer to the general section 1233 REFERENCED DOCUMENTS. The following documents are specifically referred to in this section:

NZBC C/AS2	Protection from fire
AS/NZS 2311	Guide to the painting of buildings
AS/NZS 2312.1	Guide to the protection of structural steel against exterior atmospheric corrosion by the use of protective coatings - Paint Coatings
AS/NZS 5131	Structural steelwork - Fabrication and erection
AS/NZS ISO 9001	Quality management systems - requirements
SNZ TS 3404	Durability requirements for steel structures and components
WorkSafe	Guidelines for the provision of facilities and general safety in the construction industry
WorkSafe	Guidelines for the management of lead-based paint
MPNZA	Specification manual
MPNZA	Health and Safety Programme

Health and Safety at Work Act 2015

1.4

~

Requirements

1.5 NO SUBSTITUTIONS

Substitutions are not permitted to any specified manufacturer's system, or associated components and products.

1.6 QUALIFICATIONS

Painters to be a member of MPNZA and experienced competent workers, familiar with the materials and the techniques specified.

1.7 HEALTH AND SAFETY

Refer to the requirements of the Health and Safety at Work Act 2015 and WorkSafe: Guidelines for the provision of facilities and general safety in the construction industry. If the elimination or isolation of potential hazards is not possible then minimise hazards in this work on site by using the proper equipment and techniques as required in the MPNZA Health and Safety Programme. Supply protective clothing and equipment. Inform employees and others on site of the hazards and put in place procedures for dealing with emergencies.

Refer to WorkSafe: Guidelines for the management of lead-based paint for the required procedures and precautions when:

- treating/removing lead-based paint
- burning off paint
- sanding off paint
- using solvent based paint removers.

1.8 MATERIAL SAFETY DATA SHEET

Obtain from each paint manufacturer the material safety sheet for each product used. Keep sheets on site and comply with the required safety procedures.

Warranties

1.9 WARRANTY

Warrant this work under normal environmental and use conditions against failure.
2 years: Warranty period

Refer to the general section 1237WA WARRANTY AGREEMENT for the required format and details of when completed warranty must be submitted.

Performance

1.10 MANUFACTURER'S INSPECTION

Allow the paint manufacturers to inspect the work in progress and to take samples of their products from site if requested.

1.11 INSPECTION OF WORK

Inspection of the whole of the work at each of the stages scheduled may be made. Agree a programme that will facilitate such inspection, including notification when each part and stage of the work is ready for inspection.

2 PRODUCTS

Materials

2.1 PAINT TYPES

Use the manufacturer's complete system and only the products specified.

2.2 MATERIALS GENERALLY

Use only the Manufacturer's products which are guaranteed for their consistency and performance under AS/NZS ISO 9001 and APAS approval, prepared, mixed and applied as directed in the Manufacturer's specification sheets, specification manuals and product data sheets.

2.3 THINNERS AND ADDITIVES

Only use thinners or additives within the stated limits for the particular situations specified.

Accessories

2.4 FILLERS

For recommendations on; fillers, stopping, paint strippers, cleaning agents, etching solutions, mould inhibitors, rust inhibitors, knotting and other commodities used for the surface preparation, refer to the manufacturer of the specified coating.

3 EXECUTION

Conditions

3.1 EXECUTION

To conform to manufacturer's requirements and those methods, practices and techniques contained in AS/NZS 2311, the MPNZA Specification manual, and WorkSafe: Guidelines for the provision of facilities and general safety in the construction industry.

3.2 PREPARE

Prepare surfaces to the coating manufacturer's requirements.

3.3 COATED SURFACES

Ensure that substrate surfaces are able to achieve the specified finish.

3.4 PRE-PRIMED SURFACES

Sand down any breakdown or damage of the primer to a sound surface and immediately re-prime.

3.5 BRUSH DOWN

Brush down surfaces immediately before application, to remove dust, dirt and loose material.

3.6 COMPATIBILITY

Check that materials are as required by the paint manufacturers for the particular surface and conditions of exposure, and that they are compatible with each other. Use paint from the same manufacturer for each paint system. If not compatible, obtain instructions before proceeding.

3.7 TREATED SURFACES

Where surfaces have been treated with preservatives or fire retardants, check with the treatment manufacturer that coating materials are compatible with the treatment and do not inhibit its performance. If they are not compatible, obtain instructions before proceeding.

3.8 BACK PAINTING

Co-ordinate with cladding and/or lining installer as to who will do the work and timing.

Exterior
For exterior cladding and trim that require on site finishing, paint the back and exposed bottom edges at the base of the cladding (generally, bottom plate overhang and horizontal flashings) to the manufacturer's requirements, but at least to 150mm up from base. Coating to match front finish, generally apply 2 coats or 1 coat if pre-primed.
Refer to appropriate exterior paint sections SELECTION clauses for claddings to be back painted.

Interior
For lining and trim that require on site finishing and/or back painting (usually wet areas), paint the back and exposed bottom edges at the base of the lining, to the manufacturer's requirements, but at least to 150mm up from base. Coating to match front finish, generally apply 2 coats or 1 coat if pre-primed, or if no front finish seal to manufacturer's requirements.
Refer to appropriate interior paint sections SELECTION clauses for linings to be back painted.

3.9 ANCILLARY SURFACES

The coatings listed in schedules and elsewhere are of necessity simplified. Coat ancillary exposed surfaces to match similar or adjacent materials or areas, except where a fair-faced natural finish is required or items are completely prefinished. In cases of doubt obtain instructions before proceeding.

3.10 HARDWARE

Do not paint hinges or hardware that cannot be removed. If items can be removed, carefully remove hardware, fixtures and fittings before commencing work. Set aside where they cannot be damaged or misplaced and replace on completion.

3.11 PROTECTION

Use dropsheets, coverings and masking necessary to protect adjoining fixtures, fittings and spaces from paint drops, spots, spray and damage.

Preparation - unpainted and pre-primed timber and wood based products

3.12 MOISTURE CONTENT

Ensure moisture content at the time of application is near to the equilibrium moisture content pertaining to the particular locality in which the timber is used, without any excessive moisture content gradient between core and surface.

3.13 PREPARING DRESSED TIMBER

Ensure dressed timber is smooth, free from raised or woolly grain, planing burrs or other machining defects. Slightly round or ease sharp edges to ensure they can be properly coated. Sand timber to bring up to a smooth finish along the direction of the grain. Sand timber back to new condition timber that has been weathered.

3.14 PREPARING ROUGH SAWN TIMBER

Thoroughly brush along the direction of the grain to remove dust and dirt.

3.15 PREPARING PRE-PRIMED TIMBER

Check pre-prime coat for damage, powdering, weathering or loss of adhesion. Where primer is sound, thoroughly brush along the direction of the grain to remove dust and dirt. If there is doubt, sand back and re-prime.

3.16 TIMBER SPECIES

Check that the preparation and paint system is suitable for the timber species.

3.17 PREPARING DAMAGE AND DEFECTS

Scrape clean loose or soft material holes, depressions, resin or gum pockets, knot holes, surface splits, checks, or any localised decay. Apply primer and/or sealer specified and fill these areas with linseed oil putty or other appropriate filler.

3.18 FIXINGS

Take timber fixings below the painted or clear finished surface. Leave corrosion resistant timber fixings flush with clear finished surfaces.

3.19 CLEANING

Remove grease and oil by wiping down with solvent or water-based degreasing agent. Remove resin by wiping down with solvent or water-based degreasing agent or heating and scraping. Remove sanding dust. Bad staining may be untreatable and require replacement of timber, discuss with paint manufacturer and main contractor.

Preparation - gypsum plaster

3.20 PREPARING GYPSUM PLASTER

Fill and sand small crevices and cracks. Surface moisture content not to exceed 12% at time of coating.

Preparation - unpainted linings

3.21 PREPARING FIBROUS PLASTER

Check for and remove release agents and other contaminants by washing with clean water or solvent and allow to dry. Fill cracks and surface imperfections with patching plaster and lightly sand smooth. Remove dust.

3.22 PREPARING PLASTERBOARD

Check that joints are prepared to a smooth level surface finish. Fill cracks and surface imperfections with the sheet manufacturer's required stopping compound and lightly sand smooth. Remove dust.

Preparation - painted surfaces generally

3.23 SURFACE PREPARATION

Refer to the Manufacturer's specification sheets and product data sheets. Carry out the preparatory work required by them for each of the substrates.

For interior surfaces such as paper faced plasterboard use the Manufacturer's recommended finishing compound as an aid to achieving a Level 5 finish.

3.24 MOULD

Sterilise surface mould by washing or sponging the whole surface with a one part sodium hypochlorite household bleach to three parts clean water solution. Allow bleach to act for 30 minutes and wash off with clean water. Wash cloths and sponges regularly in clean water. Reapplication may be necessary. Treat with anti-mould solution to the treatment manufacturer's requirements.

3.25 GAP FILLING

Fill cracks, holes, indented and damaged surfaces with putty, plaster filler, wood filler, or plastic wood, as appropriate and in accordance with the paint manufacturer's requirements. Allow to dry or set before sanding back level with the surface. Prime coat or seal the timber before using putty. Wet cement or gypsum base plasters before applying filler. Use only Portland cement base types, or water-insoluble organic-based gap fillers in exterior or wet areas.

Application - before applying final coatings

3.26 OFF-SITE WORK

Carry out off-site preparation and coating under cover, in a suitable environment and with adequate lighting. Store items both before and after coating in a clean, dry area, protected from the weather and mechanical damage, properly stacked and spaced to permit air circulation and to prevent sticking of surfaces.

3.27 PRIMING JOINERY

Before priming preservative treated timber ensure that any cut surfaces have been retreated. Liberally coat end grain, allow to soak in and then recoat. Ensure LOSP. treated joinery has dried sufficiently to lose odour.

3.28 CONCEALED JOINERY SURFACES

Apply off-site coatings to all surfaces including those which will be concealed when incorporated into the building.

3.29 CONCEALED METAL SURFACES

Apply primer to suit the coating system to all metal surfaces which will be concealed when incorporated into the building.

3.30 DOORS

Prime or seal and paint all six faces of doors before hanging.

3.31 BEAD GLAZING

Before glazing apply the first two coats, or the primer and one undercoat, to rebates of stained, varnished or painted joinery and beads.

3.32 PUTTY GLAZING

Follow putty manufacturers recommendations for application, drying, and painting. Ensure that the putty is fully protected by the coating system as soon as it is sufficiently hard.

Application - generally

3.33 PAINTING GENERALLY

Comply with the paint manufacturer's requirements and any additional requirements in this specification.

3.34 MIXING

Thoroughly mix paints. Lift any settled pigment and ensure the paint is homogenous.

3.35 ENVIRONMENT

Paint exterior surfaces only in favourable weather conditions:

- warm dry days without frost or heavy dews
- avoid painting in direct sunlight any surfaces that absorb heat excessively
- as far as possible apply paint in the temperature range 15°C to 25°C
- do not paint if temperatures fall outside the range of 10°C and 35°C unless paints with the necessary temperature tolerance have been specified
- do not apply solvent borne paint if moisture is present on the surface

3.36 SEQUENCE OF OPERATIONS

Painting work to generally follow the following sequences:

- back painting and pre-installation painting, then post-installation exposed-face painting
- complete surface preparation before commencing painting
- apply paint in the specified sequence using the specified paint
- allow full drying time between coats to the paint manufacturer's requirements
- do not expose primers, undercoats and intermediate coats beyond manufacturers stated instructions before applying the next coat
- finish broad areas before painting trim
- ensure batch numbers of tins are matched for whole areas
- internally, paint ceilings before walls and walls before joinery, trim and other items

3.37 PAINT APPLICATIONS

Select brush, roller, or pad and apply paint to the requirements of the paint manufacturer and to obtain a smooth even coating of correct thickness, uniform gloss and colour.

3.38 DRYING TIME

Before handling or applying the next coat of paint, give each coat the full drying time as required by the paint manufacturer. Ensure that surfaces are dry and that condensation does not occur before the paint reaches surface-dry condition.

3.39 LIGHTLY SAND

Lightly sand primers, sealers, undercoats and intermediate coats to remove dust pick-up, protruding fibres and coarse particles. Remove dust immediately before applying the next coat.

3.40 DEFECTIVE WORK

Correct defective work immediately and re-coat as required, following precisely the paint system specified.

3.41 EACH COAT

Each coat of paint and the completed paint system to have the following qualities and properties:

- uniform finish, colour, texture, sheen and hiding power
- the specified number of coats applied
- no blemishes such as runs, sags, crinkling, fat edges, entrained paint skins, hairs, dust, bare or starved patches, cracks, brush marks, ladder marks and blistering
- proper covering of corners, crannies, thin edges, cracks, end grain and other difficult places of application

Completion

3.42 CLEAN

Clean adjoining surfaces, glass and fittings of any paint contamination. Clean off glass indicators at completion of the building works. Clean glass inside and out to a shining finish.

3.43 CLEAN EQUIPMENT

Use the Manufacturer's environmental wash system for the cleaning of water-based paint and plasters from brushes, rollers, plastering or spray equipment to separate the solids from the water component for safe disposal.

3.44 LEAVE

Leave the whole of this work uniform in gloss and colour, of correct thickness, free from painting defects, clean and unmarked and to the standard required by following procedures.

3.45 REMOVE

Remove dropsheets, coverings and masking to leave surrounding surfaces and areas clean, tidy and undamaged. Remove debris, unused materials and elements from the site.

3.46 REPLACE HARDWARE

Replace hardware without damage to it or the adjoining surface. Leave properly fitted and in working order.

4 SELECTIONS

4.1 SELECTIONS

Refer to 6711 PAINTING EXTERIOR and 6721 PAINTING INTERIOR for selections.

6711 PAINTING EXTERIOR

1 GENERAL

This section relates to the preparation of exterior unpainted and pre-painted surfaces, and the application of exterior:

- decorative paint coatings
- protective paint coatings
- sealers
- stains
- clear finishes

Related work

1.1 RELATED SECTIONS

Refer to 6700 PAINTING GENERAL for general painting matters.
Refer to 6721 PAINTING INTERIOR for interior paint systems.

Documents

1.2

Warranties

1.3 WARRANTY

Warrant this work under normal environmental and use conditions against failure.
2 years: Warranty period

Refer to the general section for the required form of 1237WA WARRANTY AGREEMENT and details of when completed warranty must be submitted.

2 PRODUCTS

2.1 PRODUCTS

Refer to 6700 PAINTING GENERAL for product clauses.

3 EXECUTION

3.1 EXECUTION

Refer to 6700 PAINTING GENERAL for execution clauses.

4 SELECTIONS

4.1 INSPECTION OF WORK

Stage	Coating system
~	

4.2 BACK PAINTING SCHEDULE

Paint 2 coats (including any pre-prime) to match exposed face coating.

Cladding type	Extent of back painting
~	~

Paint systems

4.3 TIMBER / PLYWOOD / HARDBOARD - PAINT

Brand:	~
Coating type:	~
System:	~
Preparation:	~
1st coat:	~
2nd coat:	~
3rd coat:	~

4.4 CONCRETE / BLOCKWORK / FIBRE CEMENT / CEMENT PLASTER

Brand:	~
Coating type:	~
System:	~
Preparation:	~
1st coat:	~
2nd coat:	~
3rd coat:	~

7123B BUTELINE HOT & COLD WATER SYSTEM

1 GENERAL

This section relates to the **New Zealand manufactured Buteline** Hot and Cold Water System, from the network utility supply authority water main to designated points and appliances, the installation of hot water heating appliances, distributing piped hot water and the installation of isolating valves.

- **Buteline** Lilac tubing distribution of reclaimed / recycled non portable water supply.
- **Buteline** Green tubing distribution of rainwater supply

1.1 RELATED WORK

Refer to 7151 SANITARY FIXTURES, TAPWARE & ACCESSORIES for tapware supply.

Documents

1.2 DOCUMENTS

Refer to the general section 1233 REFERENCED DOCUMENTS. The following documents are specifically referred to in this section:

NZBC B2/AS1	Durability
NZBC C/AS1-AS2	Protection from fire
NZBC G4/AS1	Ventilation
NZBC G12/AS1	Water supplies
AS/NZS 2642.1	Polybutylene pipe fittings - Polybutylene (PB) pipe extrusion compounds
AS/NZS 2642.2	Polybutylene pipe fittings - Polybutylene (PB) pipe for hot and cold water applications
AS/NZS 2642.3	Polybutylene pipe fittings - Mechanical jointing fittings for use with polybutylene (PB) pipes for hot and cold water applications
AS/NZS 2845.1	Water supply - Backflow prevention devices - Materials, design and performance requirements
AS/NZS 3500.1.2018	Plumbing and Drainage - Water services
AS/NZS 3500.4	Plumbing and Drainage - Heated water services
NZS 4602	Low pressure copper thermal storage electric water heaters
NZS 4606.3	Storage water heaters - Specific requirements for water heaters with composite shells
NZS 4607	Installation of thermal storage electric water heaters: valve vented systems
NZS 4617	Tempering (3-port mixing) valves
AS/NZS 5601.1	Gas installations - general installations
NZS 7602	Polyethylene pipe (Type 5) for cold water services

Gas (Safety and Measurement) Regulations 2010
Plumbers, Gasfitters and Drainlayers Act 2006

1.3 MANUFACTURER DOCUMENTS

Manufacturer and supplier documents relating to work in this section are:
MBIE (DBH) Certificate of Accreditation 94/005B **Buteline** Polybutylene Pipe System
Buteline Plumbers technical and installation manual

Copies of the above literature are available from **Buteline**

Web:	www.buteline.com
Email:	paul.carrington@buteline.com
Telephone:	0-9-273 5800
Facsimile:	0-9-273 5808

Warranties

1.4 WARRANTY

Warrant this work under normal environmental and use conditions against failure of materials and execution.

Warranty period: 2 years

Refer to the general section for the required form of 1237WA WARRANTY AGREEMENT and details of when completed warranty must be submitted.

1.5 WARRANTY - MANUFACTURER/SUPPLIER

Provide a **Buteline** materials warranty in the suppliers standard form.
Warranty period: 25 years

Requirements

1.6 NO SUBSTITUTIONS

Substitutions are not permitted to any specified **Buteline** product or component, or associated **Buteline** products, components or accessories.

1.7 QUALIFICATIONS

Refer to 1270 CONSTRUCTION for requirements relating to qualifications.
Registered plumbers to be experienced competent workers, familiar with the materials and the techniques specified. Carry out all work under the direct supervision of a certifying plumber under the Plumbers, Gasfitters and Drainlayers Act 2006.

1.8 PIPEWORK LAYOUTS

~

1.9 INFORMATION FOR OPERATION AND MAINTENANCE

Supply maintenance information to requirements set out in the 1239 OPERATION & MAINTENANCE section.

1.10 HOT WATER TEMPERATURES

To NZBC G12/AS1,6.14

Storage water heaters to store water at not less than 60ºC.

Hot water piping system, with temperature controls where necessary (tempering valve etc), to provide water at the outlet at the following temperatures:

For personal hygiene fixtures (showers, baths, wash hand basins etc) temperatures to be close to but not to exceed:

- 45ºC - for early child hood centres, schools, elderly facilities, hospitals, psychiatric or disabled institutions.
- 55ºC - for personal hygiene fixtures in all other buildings.

For non-personal hygiene fixtures (kitchen sinks and equipment, laundry tubs, cleaners sinks,industrial fixtures etc) temperatures are:

- Unrestricted - direct from water heater, approx. 60°C, must be less than 65°C (for kitchen sinks and equipment, laundry tubs, cleaners sinks etc) - in all buildings.
- Unrestricted - direct from water heater not tempered (for industrial fixtures and specific items etc) - in all buildings.

This clause excludes boiling units.

Performance

1.11 TESTING

Confirm the timing before carrying out any tests. Supply potable water and the apparatus needed.

Slowly fill service pipes with water to exclude air. Test to either NZBC G12/AS1, 7.5.1a, 1500 kpa for period not less than 15 minutes or to AS/NZS 3500.1.2018, section 18.3.1 **Hydrostatic test**, 1500 kpa for period not less than 30 minutes. Ensure there is no measurable loss of pressure. Slowly fill distribution pipes with water to exclude air. Ensure that with draw-off taps closed the system must remain water-tight.

1.12 GAS CERTIFICATE OF COMPLIANCE

Provide a Certificate of Compliance (CoC) as required by the Gas (Safety and Measurement) Regulations 2010 to the owner, and when required provide a copy to the energy supplier before connection.

1.13 GAS SAFETY CERTIFICATION

Provide a Gas Safety Certificate (GSC) as required by the Gas (Safety and Measurement) Regulations 2010 and provide a copy to the owner and when required the BCA. To be provided at completion of the work, prior to Practical Completion.

1.14 GAS APPLIANCE COMPLIANCE

Supplier to provide a Supplier Declaration of Compliance (SDoC) in accordance with the requirements of the Gas (Safety and Measurement) Regulations 2010.

2 PRODUCTS

Materials

2.1 POLYBUTENE-1 PIPE

Buteline Polybutene-1 tubing to AS/NZS 2642.1, AS/NZS 2642.2 and AS/NZS 2642.3 complete with fittings and accessories brand-matched with 50 year durability to NZBC B2/AS1, table 1 and NZBC G12/AS1, table1, with **MBIE (DBH) Certificate of Accreditation 94/005B** for both residential and commercial applications.

2.2 WATER METER

To the requirements of the network utility operator.

2.3 ADJUSTABLE WALL ELBOW

Buteline Bute-1 adjustable wall elbow with 4 way fixing clamp.

2.4 VALVES

Pressure reducing or limiting valve, filter, non-return valve, cold water expansion valve, pressure relief or temperature valve, pressure relief valve and isolating valves to NZBC G12/AS1: Water supplies.

2.5 INSULATION

Pre-formed pipe sections complete with bends and fittings, with fixing tape to the manufacturer's requirements.

2.6 TEMPERING VALVE

Tempering valve to NZS 4617 to NZBC G12/AS1.

2.7 HOT WATER SAFETY SYSTEM

Buteline AquaFuse hot water safety monitor to NZS 4617 to NZBC G12/AS1 and manufacturer requirements.

2.8 BACKFLOW PREVENTION DEVICES

Provide backflow prevention devices to AS/NZS 2845.1 where it is possible for water or contaminants to backflow into potable water supply. Refer to NZBC G12 /AS1, 3.4 Backflow protection, and NZBC G12 /AS1, table 2, Selection of Backflow Prevention.

Materials - hot water heating appliances

2.9 ELECTRIC HOT WATER CYLINDER, MAINS PRESSURE

A grade to NZS 4606.3, ceramic-coated steel thermal storage cylinder, insulated and complete with required fittings.

2.10 ELECTRIC HOT WATER CYLINDER, LOW PRESSURE

A grade to NZS 4602, copper thermal storage cylinder insulated and complete with pressure reducing valve and required fittings.

2.11 ELECTRIC HOT WATER CYLINDER, UNDER-SINK, LOW PRESSURE

A grade to NZS 4602, copper thermal storage cylinder insulated and complete with required fittings.

2.12 ELECTRIC HOT WATER HEATER, INSTANTANEOUS TYPE

Instantaneous flow unit complete with required fittings to AS/NZS 60335.2.35.

2.13 ELECTRIC BOILING CYLINDER, WALL MOUNTED

Wall-mounted boiling water heater in pre-finished cabinet, complete with tap draw off.

2.14 GAS HOT WATER HEATER, STORAGE TYPE

Insulated cylinder with an integral gas burner and flue.

2.15 GAS HOT WATER HEATER, CONTINUOUS FLOW TYPE

Continuous flow unit with an integral gas burner and flue.

2.16 HEAT PUMP WATER HEATER - INTEGRAL SYSTEM

Heat pump water heating system, with insulated storage cylinder and compressor/condenser /evaporator, complete with required fittings.

2.17 HEAT PUMP WATER HEATER - SPLIT SYSTEM

Heat pump water heating system, with insulated storage cylinder and separate compressor/condenser/evaporator, complete with required fittings. With flow and return pipe work for water between cylinder and heat pump. Insulated exposed flow and return pipe work.

Components

2.18 JOINTING COMPONENTS

Buteline manufactured jointing components made from either premium grade custom thermo polymer or DR Brass designed for use with **Buteline** Polybutene-1 pipe.

2.19 PROTECTIVE TAPE

Plasticised PVC tape or similar for protection of jointing components for underground installations.

3 EXECUTION

Conditions

3.1 DELIVERY, STORAGE & HANDLING OF PRODUCTS

Refer to 1270 CONSTRUCTION for requirements relating to delivery, storage and handling of products.

3.2 ROUTINE MATTERS

Refer to 1250 TEMPORARY WORKS & SERVICES for protection requirements.
Refer to 1270 CONSTRUCTION for requirements relating to defective or damaged work, removal of protection and cleaning.

3.3 CORE HOLES AND SLEEVES

Review location and fit core holes and sleeves as needed throughout the structure in conjunction with the boxing, reinforcing and placing of concrete. Strip core holes and make good after installation of pipework.

3.4 CONCEAL

Conceal pipework within the fabric of the building unless detailed otherwise. Satin finish chrome plate exposed work, complete with matching ferrule at the surface penetration.

3.5 THERMAL MOVEMENT

Accommodate movement in pipes resulting from temperature change by the layout of the pipe runs. Sleeve through concrete or steel penetrations.

3.6 PIPE SIZE

Flow rates to each outlet to be no less than those given in NZBC G12/AS1, table 3, Acceptable flow rates to sanitary fixtures, with pipe size as determined in NZBC G12/AS1, table 4, Tempering valve and nominal pipe diameters.

3.7 EQUIPOTENTIAL BONDING METALLIC WATER SUPPLY PIPES

If it is an electrical requirement, before enclosing, ensure metallic water supply pipes and metallic sanitary fixtures are equipotential bonded (or at least conductor cable attached) to NZBC G12/AS1.

Application - jointing

3.8 JOINTING POLYBUTENE-1 PIPE

Aluminium clamped fitting to NZBC G12/AS1 and AS/NZS 2642, part 3.

Application - distribution systems

3.9 WATER SUPPLY CONNECTION

Arrange with the network utility operator for a connection to the water main and from there through a water meter and gate valve. Provide back flow prevention to NZBC G12/AS1.

3.10 COLD WATER INSTALLATION

From connection point, size the runs and branches to deliver the acceptable flow rate to NZBC G12/AS1, table 3, Acceptable flow rates to sanitary fixtures at each outlet. Allow for the expected concurrent use of adjoining fixtures. Lay out pipes in straight runs with support spacing to NZBC G12/AS1, table 7, Water supply pipework support spacing firmly fixed and buffered to eliminate noise and hammer, with preformed tee-connection take-offs and branches, complete with necessary valves, fittings and insulation to hot water line where required.

Application isolating valves

3.11 BUILDING ISOLATING VALVE

Install an isolating valve in an accessible position at the point of entry to the building.

3.12 INSTALL ADDITIONAL ISOLATING VALVES - CONCEALED

Install additional isolating valves in an accessible and visually discrete position adjacent to or near by the specific fixture to allow for easy connection and operation. When the building is divided into zones, ensure an isolating valve is installed in each zone.

3.13 IN LINE FILTER

Install an in line filter immediately adjacent to the main isolating valve at the point of entry to the building, in an accessible position to allow for easy cleaning.

Application - hot water systems

3.14 HOT WATER CYLINDER INSTALLATION GENERALLY

Install hot water cylinders complete to the manufacturer's requirements and to NZBC G12/AS1, 6.11, Water heater installation. Valve-vented systems to NZS 4607.

3.15 SEISMIC RESTRAINTS - GAS WATER HEATING APPLIANCES

Gas appliances to be restrained to manufacturer's requirements, AS/NZS 5601.1 and NZBC C/AS1-AS2, 7.2 Gas-burning Appliances.

3.16 SEISMIC RESTRAINTS - NON-GAS WATER HEATING APPLIANCES

Non-gas (electric, wet-back, solar etc) water heating appliances to be restrained to manufacturer's requirements and NZBC G12/AS1, 6.11, Water Heater Installation.

3.17 INSTALL LOW PRESSURE UNDER-SINK HOT WATER CYLINDER

Install hot water cylinders complete to the manufacturer's requirements and to NZBC G12/AS1, 6.11 Water heater installation. Connect to sink tap.

3.18 INSTALL ELECTRIC HOT WATER HEATER, INSTANTANEOUS TYPE

To AS/NZS 3500.4.
Install the unit to manufacturer's requirements, provide isolating valve on cold water feed.

3.19 INSTALL WALL-MOUNTED BOILING CYLINDER

Install to the cylinder manufacturer's stated requirements. Locate where shown.

3.20 GAS HOT WATER HEATER INSTALLATION, STORAGE TYPE

Install complete with the necessary fittings to the manufacturer's requirements and in accordance with NZBC G12/AS1, 6.11 Water heater installation. Install flue in accordance with the manufacturer's details and requirements and, AS/NZS 5601.1 (for internal or external appliances) or NZBC G4/AS1 (internal appliances). Refer to section 7221 GAS APPLIANCES for installation of gas appliances.

3.21 GAS HOT WATER HEATER INSTALLATION, CONTINUOUS FLOW TYPE

Install complete with the necessary fittings to the manufacturer's requirements and in accordance with NZBC G12/AS1, 6.11, Water heater installation. Install flue in accordance with the manufacturer's details and requirements and, AS/NZS 5601.1 (for internal or external appliances) or NZBC G4/AS1 (internal appliances). Refer to section 7221 GAS APPLIANCES for installation of gas appliances.

3.22 INSTALL HEAT PUMP WATER HEATER - INTEGRAL SYSTEM

Install complete with the necessary fittings to the manufacturer's installation instructions.

3.23 INSTALL HEAT PUMP WATER HEATER - SPLIT SYSTEM

Install complete with the necessary fittings and pipe work, to the manufacturer's installation instructions.

3.24 HOT WATER PIPEWORK

Use a take-off spigot to give separate branches to each fitting, lay out pipes with support spacing to NZBC G12/AS1, table 7 Water supply pipework support spacing. Fix firmly and buffer to eliminate noise and hammer, with preformed tee-connection take-offs and branches, and preformed bends, complete with all necessary valves and fittings.
Lag all pipes with rigid insulation to the manufacturer's requirements.

3.25 INSTALL TEMPERING VALVE

Install tempering valve with 1 metre minimum length of copper pipe from outlet of hot water cylinder and to manufacturer's instructions.

3.26 INSTALL TEMPERING VALVE WITH AQUAFUSE

Install tempering valve 1 metre minimum from outlet of hot water cylinder and to manufacturer's instructions. Install preformed copper pipe 'T' supplied with AquaFuse kit from outlet of hot water cylinder to **Buteline** AquaFuse fitting connected to the Polybutene-1 piping. Install to **Buteline's** instructions.

Application - ring main system

3.27 RING MAIN SYSTEM

Design and install all pipework, fittings and associated accessories for a ring main system to NZBC G12/AS1 and the appropriate fitting manufacturer's specification

Installation - tapware

3.28 INSTALLING APPLIANCE ISOLATING VALVES - CONCEALED

Install isolating valves for appliances in accessible positions. Locate in adjacent cupboards and position to allow for easy connection and operation.

3.29 INSTALLING TAPWARE

Install tapware supplied under 7151 SANITARY FIXTURES, TAPWARE & ACCESSORIES. Install in accordance with the manufacturer's requirements.

Completion

3.30 COMPLETION MATTERS

Refer to 1270 CONSTRUCTION for completion requirements and if required commissioning requirements.

4 SELECTIONS

Substitutions are not permitted to the following, unless stated otherwise.

Water main

4.1 BUTELINE WATER MAIN

Size: PB 22 (18mm nominal internal bore)

4.2 POLYETHYLENE WATER MAIN

Size: 25mm outside diameter

Pipework

4.3 BUTELINE POLYBUTENE-1 PIPE WORK

Branch off take:	PB 18 (13mm nominal internal bore)
Branch main:	PB 22 (18mm nominal internal bore)
Main:	PB 28 (23mm nominal internal bore)
Insulation:	~ for hot water line

4.4 BUTELINE HOT WATER RING MAIN SYSTEM PIPE WORK

Pipework:	PB 22 (18mm nominal internal bore)
Insulation:	~ for ring main
Pump:	~

4.5 BUTELINE 12MM POLYBUTENE-1 PIPE WORK FOR LONG RUN HOT LINES

Branch off take:	PB 12 (9.5mm nominal internal bore)

Hot water systems

4.6 ELECTRIC HOT WATER CYLINDER, MAINS PRESSURE

Brand:	~
Model size:	~

4.7 ELECTRIC HOT WATER CYLINDER, LOW PRESSURE

Brand:	~
Model size:	~

4.8 ELECTRIC HOT WATER CYLINDER, UNDER-SINK, LOW PRESSURE

Brand:	~
Model size:	~

4.9 ELECTRIC HOT WATER HEATER, INSTANTANEOUS TYPE

Location:	~
Brand:	~
Model:	~
Max temp:	~ ºC

4.10 ELECTRIC BOILING CYLINDER, WALL MOUNTED

Brand:	~
Model size:	~

4.11 GAS HOT WATER HEATER, STORAGE TYPE

Brand:	~
Model number and capacity:	~

4.12 GAS HOT WATER HEATER, CONTINUOUS FLOW TYPE

Brand:	~
Model size:	~
Remote controller:	~

4.13 HEAT PUMP WATER HEATER - INTEGRAL SYSTEM

Location:	~
Brand:	~
Model:	~

4.14 HEAT PUMP WATER HEATER - SPLIT SYSTEM

Brand:	~
Model:	~
Location cylinder:	~
Location heat pump:	~

Valves and accessories

4.15 TEMPERING VALVE

Location: ~
Brand/type: ~
AquaFuse: Required

4.16 MAIN ISOLATING VALVE

Location: ~
Brand/type: ~

4.17 IN LINE FILTER

Location: ~
Brand/type: ~

4.18 FLOOR/ZONE ISOLATING VALVES

Location: ~
Brand/type: ~

4.19 APPLIANCE ISOLATING VALVES - CONCEALED

Appliance: ~
Brand/type: Ball cock or concealed valves to suit application

4.20 APPLIANCE ISOLATING VALVES - EXPOSED

Appliance: Washing machine
Brand/type: Refer to tapware selections

7701 ELECTRICAL BASIC

1 GENERAL

This section relates to the wiring for domestic and small scale commercial installations, including:

- power
- lighting
- electrical automation
- security system
- complete with componentry
- electrically-powered fittings
- fire rated sealers, liners and accessories

1.1

1.2 ABBREVIATIONS AND DEFINITIONS

Refer to the general section 1232 INTERPRETATION & DEFINITIONS for abbreviations and definitions used throughout the specification.
The following abbreviations apply specifically to this section:

AFDD	Arc Fault Detection Device
ELV	Extra Low Voltage
GLS	general lighting service
IP	international (ingress) protection classification
NUO	Network Utility Operator
PCB	printed circuit board
PIR	passive infrared
SIA	security integration architecture
TPS	tough plastic sheathed
TCF	Telecommunications Carriers' Forum

Documents

1.3 DOCUMENTS

Refer to the general section 1233 REFERENCED DOCUMENTS. The following documents are specifically referred to in this section:

NZBC E2/AS1	External moisture
NZBC F6/AS1	Visibility in escape routes
NZBC F7/AS1	Warning systems
NZBC G4/AS1	Ventilation
NZBC G9/AS1	Electricity
AS/NZS 1125	Conductors in insulated electric cables and flexible cord
AS/NZS 1768	Lightning protection
AS/NZS 2201.1	Intruder alarm systems - Client's premises - Design, installation, commissioning and maintenance
AS 2293.1:2005	Emergency escape lighting and exit signs for buildings - System design, installation and operation
AS 2293.3:2005	Emergency escape lighting and exit signs for buildings - Emergency escape luminaires and exit signs
AS/NZS 3000	Electrical installations (known as the Australian/New Zealand Wiring Rules)
AS/NZS 3008.1.2	Electrical installations - Selection of cables - Cables for alternating voltages up to and including 0.6/1 kV - Typical New Zealand installation conditions
AS/NZS 3100	Approval and test specification-general requirements for electrical equipment
AS/NZS 3112	Approval and test specification - Plugs and socket-outlets
AS/NZS 3113	Approval and test specification - Ceiling roses
AS/NZS 3190	Approval and test specification - Residual current devices (current-operated earth-leakage devices)
AS/NZS 3439.3	Low-voltage switchgear and controlgear assemblies - Particular requirements for low-voltage switchgear and controlgear assemblies intended to be installed in places where unskilled persons have access for their use - Distribution boards
AS 3786	Smoke alarms using scattered light, transmitted light or ionization
NZS 4514:2009	Interconnected smoke alarms for houses
NZS 4246	Energy Efficiency - Installing bulking thermal insulation in residential buildings
AS/NZS 5000.2	Electric cables - Polymeric insulated - for working voltages up to and including 450/750v
AS/NZS 60335.1	Household and similar electrical appliances - Safety - General requirements
AS/NZS 60695.11.5	Fire hazard testing - Test flames - Needle-flame test method - Apparatus, conformity test arrangement and guidance.
AS/NZS 61439.3	Low-voltage switchgear and controlgear assemblies - Part 3: Distribution boards intended to be operated by ordinary persons (DBO).
IEC 61643	Components for low voltage surge protection devices

Electricity (Safety) Regulations 2010 (Reprint as at 21 January 2019).
TCF Premises Wiring Cable Installers Guidelines for Telecommunication Services

Documents listed above and cited in the clauses that follow are part of this specification. However, this specification takes precedence in the event of it being at variance with the cited document.

1.4

Warranties

1.5 WARRANTY

Warrant the complete electrical installation under normal environmental and use conditions against failure of materials and execution.
1 year: Warranty period

Refer to the general section for the required form of 1237WA WARRANTY AGREEMENT and details of when completed warranty must be submitted.

Requirements

1.6 COMPLY

Comply with the Electricity (Safety) Regulations 2010, AS/NZS 3000, AS/NZS 3008.1.2, and TCF Premises Wiring Cable Installers Guidelines for Telecommunication Services for listed and prescribed work and with the utility network operator's requirements. Apply for the service connection. Arrange for the required inspections of listed work. Pay all fees.

1.7 QUALIFICATIONS GENERALLY

Refer to 1270 CONSTRUCTION for requirements relating to qualifications.

1.8 QUALIFICATIONS WORKERS – LICENSED UNDER STATUTE

Workers and supervisors to be appropriately qualified to applicable legislative requirements. Refer to 1270 CONSTRUCTION for additional requirements relating to qualifications.

1.9 SAFETY OF INSTALLATION - DESIGN BY ELECTRICAL ENGINEER

Before installation work commences obtain from the electrical engineer a Certified Design. The Certified Design is to comply with the Electricity (Safety) Regulations (2010), regulation 58.

1.10 SAFETY OF INSTALLATION - DESIGN BY ELECTRICIAN

Before installation work commences provide a Certified Design. The Certified Design is to comply with the Electricity (Safety) Regulations (2010), regulations 58. It must be signed by the designer of the installation.

1.11 ELECTRICAL CERTIFICATE OF COMPLIANCE

Supply a certificate of compliance (CoC) to the owner, and if required the NUO, as required by the Electricity (Safety) Regulations 2010, prior to connection.

- Arrange for the NUO to inspect before the meter installation, listed work inspection, polarity check and supply becoming live.
- Arrange for an inspector to inspect high risk electrical work as required by regulation 70.

1.12 ELECTRICAL SAFETY CERTIFICATE

Provide an Electrical Safety Certificate (ESC), as required by the Electricity (Safety) Regulations 2010, Reg 74A, to the owner and when required the BCA. To be provided no later than 20 working days after connection and prior to Practical Completion.

Quality control and assurance

1.13 INSPECTIONS

~	~

2 PRODUCTS

2.1 MAINS SUPPLY

Tough plastic sheathed neutral screened cable to AS/NZS 5000.2 and AS/NZS 3008.1.2, with a minimum rating of 60 amps per phase. Include pilot cable where required by network utility company.

2.2 CABLES

Tough plastic sheathed copper conductors to AS/NZS 5000.2, stranded above 1.0mm², and to AS/NZS 3008.1.2. Minimum sizes as below. Increase sizes if the method of installation, thermal insulation, cable length or load will reduce the cable rating below that of the MCB rating, or produce an excessive voltage drop.

Lighting circuits:	Domestic: 1.5mm² on 10 amp MCBs
Lighting circuits:	Commercial: 1.5mm² on 16 amp MCBs
Power circuits:	2.5mm² on 16 amp MCBs for domestic and unenclosed or unfilled cavity construction
	2.5mm² on 16 amp MCBs for domestic insulated construction, or filled cavity
	2.5mm² on 20 amp MCBs for unenclosed or unfilled cavity construction
	2.5mm² on 16 amp MCBs for insulated construction, or filled cavity, or lengths over 30 metres
Hot water cylinder circuits:	Single phase: 2.5mm² on 20 amp MCBs
Range/oven/hob circuits:	Single phase: 6mm² high temperature cable on 32 amp MCBs

Heat resistant cable for final connections to all heated appliances, and high temperature cable in ambient conditions that may be above 35°C (roof spaces above insulation etc).

2.3 METER BOX

Proprietary manufactured, zinc plated powder coated metal case, or ABS plastic, with glazed panel door, weatherproof where mounted outdoors, and complete with meter mounting, main switch and fuse.

2.4 DISTRIBUTION BOARD

Flush surface mount boards manufactured to AS/NZS 3439.3 , or AS/NZS 61439.3, and installed in accordance with AS/NZS 3000. Manufactured from engineering grade resin with a glow wire rating of 850°C, complete with neutral and earth busbars, and insulated comb phase bar. Distribution boards to have 20% spare capacity for future additions and alterations.

2.5 CIRCUIT PROTECTION

General requirements including main switch 63A or 100A. Residual current protection 30mA, ensure RCCBs' meet Type A and comply with AS/NZS 3190. MCBs to 4.5kA or 6kA rated.

2.6 SURGE PROTECTION

Protection for the homes appliances with IEC 61643 Class ll surge protection devices fitted to the switchboard. For variable electronic equipment fit IEC 61643 Class lll surge protection to switched socket outlets.

2.7 WALL BOXES

Standard grid size or equivalent to be manufactured from plastic or metal, with 2 or more gang size to be metal with steel inserts for accessory securing screws. Screw fixed.

2.8 SWITCH UNITS

Single pole switches to be 16 amp minimum rated, double pole or intermediate to be 16 amp minimum rated. All switches to be 230 volt a.c. polycarbonate flushplate units.
Label all switch units that control electrical equipment or special lighting circuits by proprietary engraved switch mechanisms where applicable.
Refer to drawings/schedules for number of switches per unit, dimmer units, neon (indicator or toggle) units and 2 way units.
Refer to SELECTIONS.

2.9 SWITCHED SOCKET UNITS

10 amp, 230 volt flat 3 pin socket outlets fitted with safety shutters and manufactured to AS/NZS 3100, AS/NZS 3112 and AS/NZS 3113, single or multi gang as detailed.

2.10 SWITCH UNITS - PERSON WITH DISABILITIES

In addition to clause SWITCH UNITS above, units shall comply with NZBC G9/AS1, 2.0.1.b) and d).
Refer to SELECTIONS.

2.11 CEILING ROSES

White plastic mounting base with screwed cover, manufactured to AS/NZS 3113. Terminal type. Suspended fittings to have sheathed round flexible cord to AS/NZS 3008.1.2. Refer to SELECTIONS.

2.12 HOT WATER SYSTEM SWITCH

One way 20 amp switch complete with cable clamp for flexible PVC conduit to element enclosure.

2.13 BATTEN HOLDERS

Standard white plastic bayonet cap, with cap angled where wall mounted. Brass liners.

2.14 SMOKE ALARMS

Type 1 domestic smoke alarm to NZBC F7/AS1. 1.2 **Descriptions of alarm systems**. Alarm to AS 3786. A wired 230 volt ionised smoke detector type.

2.15 DOOR BELL SYSTEM

Complete with transformer for mounting on distribution board.

2.16 LIGHT FITTINGS

Fluorescent and High Intensity Discharge fittings with low loss control gear and power factor corrected to 0.95 minimum. Control gear suitable for dimming if this is required. All fittings complete with lamps; Incandescent GLS lamps pearl, coiled-coil 230v rated, bayonet cap; Fluorescent triphosphor 2700K; CFL; halogen ELV 12v dichroic reflector with cover glass unless detailed otherwise; integral/non-integral LEDs, reflectors, lenses, heatsinks and drivers - 3,000K to 4,000K, CRI >80, L70.

2.17 RECESSED LIGHT FITTINGS - RESIDENTIAL

Residential recessed light fittings to AS/NZS 3000, 4.5.2.3.5:

- Existing fittings or retrofit situations, fittings maybe unmarked.
- New fittings can only be labelled - CA 80, CA 90, CA 135, IC, IC-F, & IC-4.

Refer to clause INSULATION & GENERAL CLEARANCES for clearances from insulation and other elements.

2.18 RECESSED LIGHT FITTINGS - NON-RESIDENTIAL

Non-residential recessed light fittings to AS/NZS 3000, 4.5.2.3.5:

- Existing fittings or retrofit situations, fittings maybe unmarked.
- New fittings can only be labelled - NON-IC, Do-not Cover, CA 80, CA 90, CA 135, IC, IC-4, and IC-F.

Refer to clause INSULATION & GENERAL CLEARANCES for clearances from insulation and other elements.

2.19 EMERGENCY LIGHT FITTINGS

Emergency escape lighting and exit signs for buildings to AS 2293.3. Exit, recessed, ceiling or wall mounted. Refer to SELECTIONS.

2.20 SPACE HEATERS

Fixed wired room heaters radiant or convector, and compliant with AS/NZS 60335.1. Flush or surface mount, fitted with safety cut-outs.

2.21 EXHAUST FANS

Ceiling, wall or duct mounted exhaust fans for ventilation to NZBC G4/AS1, and compliant with AS/NZS 60335.1.

2.22 HEATED TOWEL RAILS

Fixed wired heated towel warmers, double insulated, IPX4 splash-proof, compliant with AS/NZS 60335.1, scratch resistant powdercoated or chrome finish.

2.23 EXTERIOR SWITCHES AND SWITCHED SOCKET UNITS

Using materials with superior UV protection, impact strength, and addition chemical resistance when compared with interior polycarbonate fittings. Weather protected, switches and sockets to IP56 minimum. Sockets fitted with safety shutters behind socket pins, and all products able to be padlocked off or on.

2.24 EXTERIOR LIGHT FITTINGS

Using materials with superior UV protection, impact strength, and addition chemical resistance.
Weather protection minimums:

- IP54 for protected areas under eaves or verandahs etc.
- IP55 for exposed areas not subject to pressurised water (hoses).
- IP66 for areas subject to pressurised water or major splashing.
- IP67 for inground lights
- IP68 for submerged pool fittings

Electrical automation system

2.25 ELECTRICAL AUTOMATION SYSTEM

Electrical automation system designed to enable if required:

- Lighting - automated control and dimming timer control.
- Heating including heated towel rails and ventilation systems.
- Security - programmable to simulate lights and other devices to give appearance home is occupied - ability to interface with security system and smoke detectors to activate lights.
- Energy efficiency - automatically switch circuits off when not required or on during low tariff times.
- Appliances.
- Spa pools.
- Irrigation systems.

Security system

2.26 CONTROL PANEL

Control panel system with a minimum of one installer code, one master code, 6 zones minimum and 6 user codes. The installer to select codes to suit installation.

2.27 DETECTORS

There are two main types of detectors:

- Standard passive infrared sensors: Install in stable environments with no wind flow and no direct bright sunlight.
- Passive infrared/ microwave sensors: Install in area where environmental stability is an issue.

2.28 AUDIBLE DEVICES

Internal sirens can be either a 12V Piezo Siren or a Horn speaker with a sound pressure level of no less than 95dB.
External siren can be either a stainless steel design or have hardened plastic casing. Both designs to be fully weatherproof but not limited to IP66 Rating. The siren box to contain a strobe diffuser in either blue or red. The siren shall contain a horn speaker, 12v speaker or an electronic siren. The external siren box to have both a cover and rear wall tamper mechanism.

2.29 CABLING

Security alarm wiring to NZS/AS 1125 for cables.
Security alarm wiring to be multi stranded and not single stranded, minimum 0.5mm^2.

2.30 PERIPHERALS

Fit anti-tamper devices to detectors, control panels and equipment housings, programmed to give a tamper indication when the system is unset and a tamper alarm when the system is set.
Standard keypad manufactured of moulded hardened plastic with either a LED or LCD screen, to match the style of the wiring accessories in diameter, colour and aesthetics.

2.31 COMMUNICATIONS

Digital dialler to be built into the PCB of all control panels, with the options for both monitoring and remote dial in windows based software. Digital dialler to comply with all the industry standard communication formats including contact I.D and SIA, and NZ Telepermit certification.
Remote software able to upload / download programming changes and or history events and change status of the security alarm with the ability to be turned off if required.

3 EXECUTION

Conditions

3.1 DELIVERY, STORAGE & HANDLING OF PRODUCTS

Refer to 1270 CONSTRUCTION for requirements relating to delivery, storage and handling of products.

3.2 ROUTINE MATTERS

Refer to 1250 TEMPORARY WORKS & SERVICES for protection requirements.
Refer to 1270 CONSTRUCTION for requirements relating to defective or damaged work, removal of protection and cleaning.

Installation

3.3 MAIN SUPPLY

Lay underground mains to the NUO requirements. Excavate trench, install cable and marker tape and backfill.

3.4 METER BOX

Fit to meter box manufacturer and Electricity Retailer requirements. Recess into external wall in sheltered area and flash to weatherproof to NZBC E2/AS1 fig 69. Arrange for meter installation and connection.

3.5 DISTRIBUTION BOARD

Fit to AS/NZS 3000 and board manufacturer requirements. Recess into wall or surface mount and ensure fire containment properties of the enclosure are maintained.

3.6 CIRCUIT PROTECTION

Install MCBs at distribution board to AS/NZS 3000 to protect each final sub circuit.

3.7 EARTHING CONDUCTIVE STRUCTURE & MATERIALS

Earth all at risk structural metalwork and conductive building materials to AS/NZS 3000, 5.4.6, and the Electricity (Safety) Regulations 2010.
If they form part of the building, this includes:

- Structural steel frames or members
- Light steel framing
- Exposed conductive materials, like metal sink/tub or vanity benches etc, with attached electrical units or equipment

3.8 EQUIPOTENTIAL BONDING

Equipotential Bond extraneous conductive parts together and to the electrical installation earthing system to AS/NZS 3000, 5.6, and the Electricity (Safety) Regulations 2010 and the fitting manufacturer requirements.
If they form part of the building, this includes:

- Conductive water piping (including tap etc) and exposed related connected conductive surfaces (like metal sink benches or metal cladding etc). Not required where isolated by non-conductors (plastic pipe etc) from the mass of earth.
- Other conductive piping (not earthed by other means) and exposed related connected conductive surfaces.
- Concrete reinforcing - for floor or wall forming part of a room with a shower or bath, or the shell and surround of a swimming/spa pool
- Built-in Swimming pool and spa pool - exposed conductive parts of electrical equipment, as well as exposed conductive, fixtures, fittings and pool structures within 1.25m of pool edge

3.9 MAIN EARTH

Provide a plastic toby box to contain and protect the earth electrode. Fix the connecting earth wiring closely and securely against wall surfaces.

3.10 ARC FAULT DETECTION DEVICE (AFDD)

To AS/NZS 3000 clause 2.9, AFDD on all final sub-circuits not exceeding 20A.

3.11 EARTH LEAKAGE PROTECTION

Install RCD protection to AS/NZS 3000.

3.12 SURGE PROTECTION

Install surge protection devices to manufacturer requirements and in accordance with AS/NZS 3000 and AS/NZS 1768. When fitting IEC 61643 Class ll protection at the switchboard, protect the device by a dedicated MCB.

3.13 RCD - RESIDENTIAL INSTALLATIONS

Install 30mA RCD protection at the switchboard for all final sub circuits to control outlets and lighting except for fixed or stationary cooking equipment, to AS/NZS 3000.

3.14 RCD-AFDD COMBINED - RESIDENTIAL INSTALLATIONS

Install a 30mARCD - AFDD combined device (RCD Type II) at the switchboard for all final sub circuits not exceeding 20A, to control and protect outlets and lighting to AS/NZS 3000, (2018, 2.6 & 2.9). Protect over 20A to 32A final sub circuits with separate RCD and to AS/NZS 3000.

3.15 RCD - NON-RESIDENTIAL INSTALLATIONS

Install 30mA RCD Type II protection at the switchboard to suit location and use, to AS/NZS 3000.

3.16 RCD - AFDD COMBINED - NON-RESIDENTIAL INSTALLATIONS

Install a 30mA RCD - AFDD combined device (RCD Type II) at the switchboard for all final sub-circuits not exceeding 20A, to suit location and use, to AS/NZS 3000, (2018, 2.6 & 2.9). Protect over 20A to 32A final sub-circuits with separate RCD and to AS/NZS 3000.

3.17 RCD - SPECIFIC INSTALLATIONS

Install fixed wired RCD protected outlets (SRCD) in the following higher risk areas:

- Wet areas: bathrooms, laundries, kitchens.
- Near pools and water features.
- Where intended for use with cleaning equipment.
- Hand-held tools subject to movement in use, i.e. work-shops, garages.

3.18 SET-OUT

The position of outlets and equipment shown on drawings is indicative of requirements. Confirm documents and site conditions are not in conflict with other services or features. Resolve conflicts and discrepancies before proceeding with work affected. Confirm on site the exact location, disposition and mounting heights of all outlets, fittings, equipment, penetrations, and use of exposed wiring. Fix outlet items level, plumb and in line.

3.19 CABLING

Install wiring systems to AS/NZS 3000. All cabling run concealed. No TPS cable laid directly in concrete. Locate holes in timber framing for the passage of cables at the centre line of the timber member. Install cable in conduits where required to pass through concrete or underground. In walls run cabling horizontally and vertically in straight lines. In ceilings either run cabling along ceiling framing or attached to catenary wires. Clip cabling to ceiling framing/catenary wires.

3.20 CABLING CIRCUITS

Install all circuits with the appropriately rated cable and circuit protection. Install with a maximum of 8 light switch units or 4 double or single switched socket units on any circuit. Minimum 2 lighting circuits per floor. Separate circuits for all electric heating appliances. Kitchen sockets to be on at least two different circuits.

3.21 WALL BOXES

Mount flush in cavity construction size to fit products selected. Fix vertically mounted wall boxes to studs. Screw fix horizontally mounted switched socket outlet wall boxes to solid blocking or nogs. Fix switch panel wall boxes to solid blocking.

3.22 SWITCHES AND SWITCHED SOCKET UNITS

Fit all switch units and socket units to the manufacturers requirements with heights and mounting directions as indicated in SELECTIONS.

3.23 SWITCHES AND SWITCHED SOCKET UNITS - FOR PERSON WITH DISABILITIES

Fit all switch units and socket units to the manufacturers requirements with heights (& mounting direction) and location to NZBC G9/AS1 and SELECTIONS.

3.24 ISOLATING SWITCHES

Locate isolating switches in positions as confirmed by the owner, when not specifically shown on the drawings.

3.25 LIGHT FITTINGS

Install light fittings in locations and at heights specified and confirmed by the owner, in accordance with the fitting manufacturer requirements.

3.26 EXTRA LOW VOLTAGE LIGHTING

Use electronic, transformers (halogen) or drivers (LED) for ELV lamps, one transformer/driver per lamp. Locate to manufacturer requirements and as close as practicable to the lamp. Ensure transformers/drivers and rear of light fittings are adequately ventilated and appropriately clear of any building elements, to AS/NZS 3000.

3.27 INSULATION & GENERAL CLEARANCES

Some electrical and mechanical services, and equipment may need to have a gap to insulation and some building elements. The gaps should be to the NZS 4246 based tables below or to the equipment manufacturers requirements if they require larger gaps. Smaller gaps to manufacturers requirements can be used for equipment specifically manufactured with heat shielding or similar (excludes light fittings).

Installed gap not to be more than 50mm bigger than the required gap.
The following tables are subject to:

- The requirements of NZS 4246 for insulation.
- The insulation is exposed to the source of heat or equipment etc.
- Insulation, has passed the needle flame test to AS/NZS 60695.11.5 and/or is non-combustible.
- Gaps to hot surfaces may have to be increased with non-compliant insulation and plastic/polymeric type insulation (EPS, XPS, PIR, etc), check with insulation manufacturer.
- Gaps to hot surfaces may be able to be reduced with non-combustible insulation, check with equipment manufacturer.
- "Secure insulation" if required means, glue, mechanical fix, or provide fixed barriers at gap edge of insulation to hold in place. Rigid or semi rigid insulation may only need a firm friction fit (secure loose pieces).
- Loose fill insulation will require fixed barriers to NZS 4246 to maintain gaps.

3.28 LIGHT FITTINGS TO INSULATION

Type of fitting	**Minimum insulation clearance**	**Comments**
Recessed, marked NON-IC, or unmarked	100mm (increase if over 100W)	To NZS 4246. NON-IC fittings and new or old unmarked & unknown fittings, and/or insulation. Insulation to be secured.
Recessed, CA 80, CA 90, or CA 135.	Abut fittings	To NZS 4246. Do not cover the fittings.
Recessed, IC, IC-F, or IC-4.	Abut & cover fittings.	To NZS 4246. Ensure insulation complies.
Recessed, marked Do-Not-Cover	Manufacturer clearances	To NZS 4246. Do not cover the fittings.
Independent control gear	Place on top of insulation & 50mm from fittings	To NZS 4246. If not on top allow 50mm clearance to insulation, do not cover. Includes, transformers, ballasts & drivers etc.
Surface fittings not exposed to insulation	Nil	To NZS 4246. Where surface fittings are isolated from insulation by appropriate linings. Excludes high heat fittings.
Surface fittings & exposed insulation	200mm	To NZS 4246. This is exposed insulation to any part of the exposed fitting & bulb/tube (e.g. exposed light in an unlined basement). Insulation to be secured.

3.29 RECESSED LIGHT FITTINGS TO COMBUSTIBLE BUILDING ELEMENTS

Type of recessed fitting	Minimum building element clearance **	Comments
Marked NON-IC, or unmarked, ≤100W	100mm, vertical & horizontal	To AS/NZS 3000:2018
Marked NON-IC, or unmarked, >100W	200mm, vertical & horizontal	To AS/NZS 3000:2007
CA 80, CA 90 or CA 135	100mm, vertical & horizontal	To AS/NZS 3000:2018
IC, IC-F or IC-4	100mm, horizontal NA, vertical	To AS/NZS 3000:2018 To be NA vertical, fitting must be covered by insulation. If not covered use 100mm clearance.
Marked Do-Not-Cover	100mm, vertical & horizontal	To AS/NZS 3000:2018. Manufacturer clearances if greater than 100mm

****** Combustible building elements exclude metal elements, but include timber framing or other timber based elements, and normal linings etc. Highly flammable materials & those likely to melt will need more clearance.

3.30 INBUILT RECESSED HOT APPLIANCES TO INSULATION

Appliance	Minimum insulation clearance	Comments
Electrical heaters	Manufacturer clearances	To NZS 4246.
Electrical heaters	100mm	Manufacturer clearances not known. To NZS 4246. Clearance may be able to be reduced with non-combustible insulation. Insulation to be secured.
Heat producing appliances & equipment	Manufacturer clearances	To NZS 4246.
Heat producing appliances & equipment	50mm	Manufacturer clearances not known. To NZS 4246. Clearance may be able to be reduced with non-combustible insulation. Insulation to be secured.

Note - Appliances and equipment excludes cables, junction boxes, light switches & power sockets etc

3.31 EXTRACTS, VENTS & ROOF UNDERLAY TO INSULATION

Appliance	Minimum insulation clearance	Comments
Ducted fan motors	50mm	To NZS 4246. Includes ducted rangehoods, extractors etc. Applies to the motor unit and electrical enclosures (not the ducts).
Ducted fan ducts	Abut	To NZS 4246. Excludes motor unit and electrical enclosures.
Unducted fan motors usually discharging to ceiling space	200mm	To NZS 4246. Includes unducted, rangehoods, extractors etc, discharging into roof space. To prevent debris falling into motor. Clearance may be able to be reduced, by providing a fixed barrier around the vent.
Roofing material/underlay	25mm	To NZS 4246. Maintain clearance from underside of roofing or flexible roofing underlay, to prevent wicking.

3.32 EMERGENCY LIGHTING

Emergency escape lighting and exit signs for buildings to AS 2293.1 and NZBC F6/AS1. Fit emergency light fittings to manufacturer specifications. Refer to plans for position of fittings.

3.33 ELECTRIC HOT WATER SYSTEM

For storage heaters, wire as a separate circuit through a wall-mounted isolating switch, with the cable from switch to element encased in flexible PVC conduit, clamp fixed at each end. Hot water cylinders, thermostats and 3000 watt element supplied and fitted under the hot and cold water system section.

3.34 SPACE HEATERS

Install to the heater manufacturer requirements, and to AS/NZS 3000. Fit neatly and without damage to surrounding finishes. Ensure control switches and thermostats are fitted to appliance, or otherwise connect to a control switch located adjacent to the heater and a remote thermostat.

3.35 SMOKE ALARMS

Install Type 1 domestic smoke alarm system to NZBC F7/AS1 3.0 **Domestic smoke alarms**, NZS 4514 and to the alarm manufacturer requirements. Fit neatly and without damage to the surrounding finish.

3.36 ELECTRIC POWERED FITTINGS AND EQUIPMENT

Install and wire fittings and equipment to individual fittings and equipment manufacturer requirements. Refer to the drawings for required layouts and locations for equipment. Refer to SELECTIONS for schedules of fittings.

3.37 BATHROOM ELECTRICAL FIXTURES

Install all electrical fixtures. Connect the following bathroom and toilet electrical items:

- Heated towel rails: Install to manufacturers requirements and installed in accordance with AS/NZS 3000
- Mirror demisters: Locate centrally above the wash hand basin(s). Connect wiring to room lighting unless specified otherwise.
- Exhaust fans: Install exhaust fans to manufacturer requirements. Installed in accordance with AS/NZS 3000 and NZBC G4/AS1.

3.38 OUTDOOR/EXTERIOR SERVICES

Install all wiring systems in accordance with AS/NZS 3000 and in accordance with the manufacturer recommendations:
Provide circuits and connections for exterior installations, including ELV 12/24 Volt path lighting and electronic irrigation systems. Refer to drawings for connection points. Where underground, ensure appropriate protection, such as thickness of sheathing, conduit, depth of cabling, and proximity to other services.

Use the appropriate rated fittings for power control and power supply. Weather protected switches and sockets to IP56. Install to manufacturer specifications using recommended fittings and sealants to maintain the products integrity.

Earth leakage protection to be provided for in areas where there is increased risk to human safety in the form of either RCDs at the distribution board, or socket outlet. RCDs are recommended for visible awareness of protection.

3.39 ELECTRICAL AUTOMATION SYSTEM

Fit distribution cabinet in wall, cut-out to finish flush with the wall surface, or surface mounted. Configure installation to manufacturer instructions. Provide adequate user training and operating manual to the owner.

3.40 LABELLING

Include label under each controller, switch and circuit breaker on distribution boards. Include a warning notice if light dimmers are used in the installation. List the rating of each circuit.

Completion & Commissioning

3.41 COMPLETION MATTERS

Refer to 1270 CONSTRUCTION for completion requirements and if required commissioning requirements.

3.42 COMPLETION - TESTS & CERTIFICATION

Refer to 1270 CONSTRUCTION for general test and certification requirements at completion.

~	~

3.43 COMMISSIONING - TESTS & CERTIFICATION

Refer to 1270 CONSTRUCTION for general test and certification requirements for commissioning.

~	~

4 SELECTIONS

Materials

4.1 SELECTIONS - FITTINGS AND HARDWARE

Confirm selections of all outlet fittings and hardware with the owner in writing before ordering.

4.2 METER BOX

Location:	~
Brand / type:	~

4.3 DISTRIBUTION BOARD

Location:	~
Brand / type:	~
MCB:	~
RCCB:	~
RCBO:	~
Surge protectors:	~
Modular contactors:	~
Main switch:	~
Timers	~

4.4 ELECTRICAL AUTOMATION SYSTEM

Location:	~
Brand / type:	~

4.5 SECURITY SYSTEM

Location	Brand / type	Detector
~	~	~

Outlets - fittings

4.6 INTERIOR SWITCHES AND SWITCHED SOCKET UNITS

Item	Brand / type
Switch / socket outlets:	~
Coverplate colour:	~
Switch module colour:	~

Item	Brand / type
Light dimmers:	~
Timer switch:	~
Push button switch:	~
Symbol switch:	~
PIR sensor switch:	~
Toggle switch:	~
Waterproof switches:	~

Item - RCD	Brand / type
Socket outlet:	~
Shaver outlet:	~
Safety switch:	~

4.7 INTERIOR SWITCHES AND SWITCHED SOCKET UNITS - PERSONS WITH DISABILITIES

In addition to clause INTERIOR OUTLETS, unit set out shall comply with NZBC G9/AS1, 2.0.1.

Item	Height to centre of unit	Orientation	Location
Switch	1000mm above FFL	vertical	Refer to drawings
Switch narrow	1000mm above FFL	vertical	Refer to drawings
Socket outlet	600mm above FFL	horizontal	Refer to drawings
Socket outlet	150mm above FFL	horizontal	Refer to drawings

Item:	Brand / Type
Switch / socket outlets:	~
Coverplate colour:	~
Switch module colour:	~

Note:

- Light switches to be horizontally aligned with door handles.
- Bedrooms to have at least one light switched from bedside.
- Socket outlets shall be at least 500mm from internal corners.

4.8 INTERIOR LIGHT FITTINGS

Fitting	Brand / type
Pendant lights:	~
Pendant cord:	~
Ceiling lights:	~
Recessed ceiling lights:	~
Recessed wall lights:	~
Recessed floor lights:	~
Wall lights:	~
Spotlights:	~
Fluorescent lights:	~
Strip lights:	~
Emergency lights:	~
Transformers:	~
LED Drivers:	~

4.9 SMOKE ALARMS

Location:	~
Brand / type:	~

4.10 EXTERIOR SWITCHES AND SWITCHED SOCKET UNITS

Item	Brand / type
Weatherproof socket outlets:	~
Timer switch:	~
Weatherproof switch:	~
Daylight switch:	~

4.11 EXTERIOR LIGHT FITTINGS

Fitting	Brand / type
Wall lights:	~
Bulkhead lights:	~
Spotlights:	~
Recessed lights:	~
Strip lights:	~
Floodlights:	~
Pole lights:	~
Security lights:	~
Security light sensors:	~
Transformers:	~
LED Drivers:	~

4.12 MISCELLANEOUS ELECTRICAL ITEMS

Item	Brand / type
Door bell system:	~
Extractor fan:	~
Water heater:	~

4.13 SPACE HEATERS

Location:	~
Brand / type:	~

4.14 HEATED TOWEL RAILS

Location	Brand / type
~	~

4.15 MIRROR DE-MISTERS

Location	Size	Wattage
~	~mm x 550mm	~ watts
Brand:	~	

4.16 BATHROOM FANS AND HEATERS

Location	Brand / type
Bathroom / ensuite-Heating:	~
Bathroom / ensuite-Extract:	~

4.17 ELECTRICAL APPLIANCES

Item	Brand / type
Range:	~
Wall oven:	~
Cooker top/hob:	~
Waste disposal unit:	~
Range hood:	~

4.18 OWNER SUPPLY ELECTRICAL ITEMS

Item	Brand / type
~	~

09 September 2021

Gina Utting and Dawn Owens
752 Settlement Road
RD 5
Wellsford 0975

Dear Gina Utting and Dawn Owens,

Section 45 request for further information on Building Consent including PIM

Reference Number: 210608
Project Location: 752 Settlement Road
Hakaru
Project Description: Proposed Separate Garage/Sleepout

This communication is to advise that your application has been checked for compliance with section 45 of the Building Act and does not contain sufficient information to enable building consent processing to begin.

MBIE recommend returning or rejecting applications that are not complete. This is sub-optimal, so rather than rejecting your application could you simply attach and return the information requested below to this email.

All information is to be supplied within 28 days (or the application may be refused). Please keep us informed if additional time is required.

We will advise you when we are in receipt of a complying section 45 application and start the building consent process and statutory time tracking in accordance with section 48 of of the Act.

Should further information be required during processing we will communicate via email. An email request for further information will stop the statutory time clock until sufficient information is provided to enable processing to be completed.

Main Building

Deposit / Fee
Please arrange payment of the deposit fee to complete the s45 lodgement process. The deposit/fee for the application is $2748.75 Bank Details for internet banking are shown at the bottom of this letter. Please quote the reference number off the top of this letter in the particulars field.

The invoice has been emailed to - russellswain@habitatdesign.co.nz

Evidence of Ownership / Owner's Permission

a. Please provide a Record of Title that is in the applicant's name and is less than 6 months old.

b. If Consent Notice/s are listed on your Record of Title, please provide a full copy including any documentation referred to - these can be obtained from Land Information New Zealand (LINZ). These Notices are required as they are legally binding documents relating to your property/Record of Title.

Please ensure that all relevant conditions addressed within the Consent Notices are met to avoid a possible delay in processing your application.

Floor Plans

Floor plans do not provide sufficient information to enable a compliance decision.

a. Please show the location of smoke detectors

Plumbing & Drainage Detailing

Please confirm the hot water heating system and where applicable provide the following:

a. A system specification for pipework and for the hot water heating system (gas, electric, solar, wetback etc)

b. Valve train layouts or gas bottle size, location and restraint detail

Energy Efficiency

Please provide H1 calculations identifying how energy efficiency provisions have been met.

My apologies if any of the above matters are already covered by the documents but have been overlooked.

Should you have any queries regarding this letter, please reply to this email or phone our technical administration team on (09) 439 3123.

Yours sincerely,



Fay Fergus
Building Technical Support

On behalf of: Kaipara District Council

Kaipara District Council Bank Details
BNZ Dargaville
02 0308 0090743 07

Form 4
Certificate attached to Project Information Memorandum

Section 37, Building Act 2004

RE: BC210608, Gina Utting and Dawn Owens, 752 Settlement Road
Hakaru

Restrictions on commencing building work under the Resource Management Act 1991

The building work referred to in the attached project information memorandum or building consent is also required to have the following resource consents under the Resource Management Act 1991:

12.10.03a - Dwellings
Less than the required net site area will be associated with each additional dwelling on the site so the construction will be classed as a Discretionary Activity and resource consent will be required to be obtained before this activity can occur.
To negate this resourse consent requirement, you can provide an amended plan with the sink in the room labelled 'garage' being removed. It will then be classed as a sleepout instead of a dwelling.

Resource consents will or may materially affect the building work to which the attached project information memorandum relates. Until resource consent has been granted, building work may not proceed.

Failure to comply with the requirements of this notice may result in legal action being taken against you under the Resource Management Act 1991.

Matthew Bayly
Planning Team
On behalf of: Kaipara District Council
Issue Date: 15 September 2021

Project information memorandum

Section 34, Building Act 2004

Application

Owner:	Gina Utting and Dawn Owens C/- Russell Swain 33 Aragon Avenue Glendowie Auckland 1071
Issue Date:	28 September 2021

Project

Description:	Proposed Separate Garage/Sleepout
Intended use:	7.0.1 Outbuildings
Location:	752 Settlement Road Hakaru
Legal description:	Lot 3 DP 560279
Valuation number:	0122004103

Please Note: This is not an approval to start building work. Please ensure your Building Consent is issued prior to commencing any work. Upon receiving your building consent please check carefully and ensure that compliance with any Conditions, District Planning restrictions or Resource Consent conditions are satisfied. The information below should be read with the understanding that should changes be made at building consent stage then this may alter the requirements listed below.

This project information memorandum does NOT constitute a building consent.

Heritage status of the building

Building work associated with this project will not be affecting land or structures that have heritage status. This project is exempt from the rules of the district plan that relate to heritage buildings.

Notable trees

Council is not aware of there being any notable trees associated with this site. Therefore the project is exempt from the rules of the District Plan that relate to Notable Trees.

Special features of the land concerned

There are no known special features of the land concerned - this includes potential natural hazards, or the likely presence of hazardous contaminants that is likely to be relevant to the design and construction or alteration of the building or proposed buildings; and that is known to the Territorial Authority; and that is not apparent from the district plan under the Resource Management Act 1991.

"Land concerned" means the land on which the proposed building work is to be carried out; and includes any

other land likely to affect or be affected by the building work.

"Special feature of the land concerned" includes, without limitation, potential natural hazards, or the likely presence of hazardous contaminants, that -
a) are likely to be relevant to the design and construction or alteration of the building or proposed building; and
b) is known to the Territorial Authority; and
c) is not apparent from the District Plan under the Resource Management Act 1991.

Other information
Once a Building Consent is issued, the Council will follow up on building work not completed within two years of building consent issue.

A Building Consent lapses and is of no effect if the building work has not been started within 12 months of the date of issue.

If the building is public premises it may not be occupied until either a Code Compliance Certificate or Certificate for Public Use has been issued.

If the building is wholly or partly a dam, a Project Information Memorandum and Building Consent must be obtained from the regional authority.

The Northland Regional Council has a register of contaminated sites. Please contact them on 0800 002 004 if you suspect that your property may be contaminated e.g. historic timber treatment sites, service stations, landfill sites.

Please check your Certificate of Title for any encumbrances (such as easements, section 73 notice) before you make an application for a Building Consent.

All archaeological sites are protected under the provisions of the Historic Places Act 1993. If subsurface archaeological evidence (shell, midden, hangi, storage pits, etc) should be unearthed during construction, work should cease in the immediate vicinity of the remains and the Historic Places Trust should be contacted.

The proposed project complies with the District Plan zoning as it does meet the Rural Zone Rules with a Harbour Overlay.

Consent Notice:12086992.2

Please be advised there are consent notices registered against this property. A breach of these conditions may result in legal action.

Council's desktop assessment has found that the site wind zone rating is high

The Council's desktop assessment has found that the site exposure zone is zone C - Inland

Development Contributions do not apply to this project.

ATTACHMENTS:
-Consent Notices 12086992.2

Notes:
1. The information supplied in the sections of this project information memorandum is specific to the building project to which the application relates by reference to Council files and records. No property inspection, or title search, has been undertaken. To enable the Council to measure the accuracy of this document based on our current records we would appreciate your response should you find any information contained herein which may be considered to be incorrect or omitted. Please telephone the Council (09) 439 3123.

2. The Council has used its best endeavors to ensure that all information provided in this project information memorandum is correct and complete in all material respects. In the event that a material error or omission can be proven the Council's liability, whether in contract or in tort shall be limited to the fee paid to Council to obtain this report.

3. This information reflects the Kaipara District Council's current understanding of information which is relevant to the project. This is based only on the information thus far provided to it and held on record. As a result the Council is not in a position to warrant that the information is complete or without error and accepts no liability for any inaccuracy in, or omission from, this information.

4. The information contained in this project information memorandum is current at the date the memorandum is issued. Further relevant information may come into the Council's possession subsequent to the date of issue.

24 September 2021

Gina Utting and Dawn Owens
752 Settlement Road
RD 5
Wellsford 0975

Dear Sir or Madam,

Request for further information on project information memorandum / building consent application - section 48

Reference Number: 210608.1
Project Location: 752 Settlement Road

Hakaru
Project Description: Proposed Separate Garage/Sleepout

Processing of your building consent application in accordance with section 48 of the Act is currently in progress. To enable this work to be completed the following additional information / clarification is required to ensure compliance with the building code is demonstrated:

Main Building

Site Considerations
Please mark on the site plan - wind, earthquake and corrosion zones for the site

E3: Internal Moisture
Please supply the wet area details for the proposed bathroom in the sleepout

G12: Water Supply
Please confirm the potable water supply for the proposal
Please supply the manufacturer spec. for the proposed HWC as marked on sheet 3

G13: Foul Water
Please show the drain for HWC in the drawing on sheet 1

When responding via email, just select "reply" which will automatically link your reply back to your application

and ensure it receives prompt attention.

Please ensure that:
- Drawing amendments are clearly identified and document changes are referenced (e.g revision clouds);
- All attached files are in PDF format and all documents are printable at the correct scale;
- Maximum document size for printing is A3;
- All information is to be supplied within 28 days (or the application may be refused). Please keep us informed if additional time is required.

Your consent application has been temporarily placed on hold while we await this information.

Yours Faithfully,

Vikrant Singh
Building Services Officer
On behalf of: Kaipara District Council

Form 5
Building consent - BC210608

Section 51, Building Act 2004

The building

Street address of building:	752 Settlement Road Hakaru
Legal description of land where building is located:	Lot 3 DP 560279
Building name:	
Location of building within site/block number:	752 Settlement Road Hakaru
Level/unit number:	0

The owner

Name of owner:	Gina Utting and Dawn Owens
Contact person:	Gina Utting
Mailing address:	752 Settlement Road RD 5 Wellsford 0975
Street address/registered office:	
Phone number:	Landline: Mobile: 0212670724
Daytime:	No information provided
After hours:	No information provided
Facsimile number:	No information provided
Email address:	ginautting@gmail.com
Website:	No information provided

First point of contact for communications with the building consent authority:
Russell Swain ; Mailing Address: 33 Aragon Avenue
Glendowie
Auckland 1071; Mobile: 0212519309; Email: russellswain@habitatdesign.co.nz

Building work

The following building work is authorised by this building consent:
Proposed Separate Garage/Sleepout

This building consent is issued under section 51 of the Building Act 2004. This building consent does not relieve the owner of the building (or proposed building) of any duty or responsibility under any other Act relating to or affecting the building (or proposed building). This building consent also does not permit the

construction, alteration, demolition, or removal of the building (or proposed building) if that construction, alteration, demolition, or removal would be in breach of any other Act.

Conditions

This building consent is subject to the following conditions:

Section 90 - Inspections by Building Consent Authorities: (1) Every building consent is subject to the condition that agents authorised by the building consent authority for the purposes of this section are entitled, at all times during normal working hours or while building work is being done, to inspect-
(a) land on which building work is being or is proposed to be carried out; and
(b) building work that has been or is being carried out on or off the building site; and
(c) any building.

(2) The provisions (if any) that are endorsed on a building consent in relation to inspection during the carrying out of building work must be taken to include the provisions of this section.

(3) In this section, inspection means the taking of all reasonable steps to ensure that building work is being carried out in accordance with a building consent.

Construction monitoring requirements
Please contact the following consultants directly to arrange the construction monitoring identified which they have been engaged to carry out.

- WGL or a qualified geotechnical Engineer:
  WILEY Geotechnical to inspect excavation prior to placement of fill or foundation elements
- PROCONSULT LIMITED or Structural engineer:
  Ribraft foundations pre-pour (structural engineer to inspect reinforcing steel prior to concrete placement)

Copies of all site reports/records must be provided to the Building Consent Authority as work proceeds for their records, please forward these to buildingsupport@kaipara.govt.nz referencing the building consent number.

Inspections
The following inspections are required:

- Prepour
- Wastepipes

- Floor Slab
- Post Wrap / Cavity
- Post Line
- Drainage
- Framing / Pre-wrap
- Preline
- Internal Membrane
- Final

Documents required

Wastepipes

- G12: Pipework pressure test documentation
- G13: Underslab plumbing as-built & plumbers details

Floor Slab

- B1: Slab - Construction monitoring records

Drainage

- E1: Stormwater drain leakage test and as-built plans
- G13: As-builts, drainlayer details, pipework test

Final

- G9: Energy works certificate

Compliance schedule

A compliance schedule is not required for the building.

Attachments

Copies of the following documents are attached to this building consent:

- Advice notes
- Project Information Memorandum (PIM): BC210608
- Form 4: Certificate attached to PIM - **Issues resolved on 17 Sep 2021**

Signature: Vikrant Singh
Position: Building Services Officer
On behalf of: Kaipara District Council
Issue Date: 29 September 2021

Advice notes

Section 92 (2A) - Code Compliance Certificate Application - Restricted Building Work: An application for Code Compliance Certificate is required to be applied for within 24 months of the Building Consent issued date, please complete this within the AlphaOne system.
As the building work involves restricted building work, all licensed building practitioners who carry out or supervise restricted building work under this consent must on completion of the work provide the Owner and the Territorial Authority (Kaipara District Council) with a record of work, in the prescribed form (Form 6A), detailing what restricted building work has been carried out or supervised.
In accordance with S92 of the Building Act records of work must be included with the application for Code Compliance Certificate.

The records of building work may be submitted via the customer portal as follows:
Sign in;
Search for the appropriate project in My Applications;
Go to the Action menu by the application progress bar and select Upload Documents;
On the Miscellaneous document select attach file and upload your document.

Site Safety: Please ensure all appropriate site safety measures are provided throughout the contract works to comply with NZ Building Code Clause F5 and all occupational safety and health requirements.

Electrical Energy Works Certificate: The Building Consent Authority places full reliance of the issue of energy work certificates to verify that the installation and completion of electrical services comply with the provisions of New Zealand Building Code Clauses G9. Code compliance certificate will not be issued unless the energy works certificates identifies compliance with this specific code clause and confirms compliance with this building consent.

Pressure Test Certificate: Upon completion of the building work the plumber shall provide a pressure test certificate to the owner to submit with their documentation for code compliance certificate application.

ADDENDA TO THIS BUILDING CONSENT:

1. This building consent will lapse and be of no effect if the building work to which it relates does not commence within 12 months after the date of issue. The consent may be extended for any further period at the discretion of council.

2. No deviation or alteration from the original plans and specifications can be carried out without written approval of Council and no building may be converted to any other use other than that stated on the building consent.

3. IMPORTANT: YOU ARE FULLY RESPONSIBLE FOR ANY DAMAGE DONE TO ANY WORKS SUCH AS TELEPHONE CABLES, POWER CABLES, WATER MAINS, GAS MAINS, SEWERS, PIPES, FOOTPATHS, ROADS OR OTHER SERVICES.

4. As the property owner is responsible for the correct siting of all works in accordance with the NZ Building Code and the Resource Management Act, the owner must ascertain the true position of the survey pegs before work commences.

5. NOTICE THAT BUILDING WORK IS READY FOR INSPECTION. For the purposes of Section 222 of the Building Act 2004, and unless otherwise provided by the building consent, the owner or other person undertaking any building work shall give at least 2 working days notice of the covering up of any
   i) drainage or plumbing
   ii) excavation for a foundation
   iii) reinforcing steel for a foundation
   iv) timber required to have a specific moisture content
   v) other work required to give notice as a condition

6. Council MUST be notified at the completion of building work on the attached form.

BUILDING CONSENT FEES:

Please note that further fees may be required to be paid before a Code Compliance Certificate is issued for this Building Consent. All fees must be paid before a Code Compliance Certificate will be issued.

Project information memorandum

Section 34, Building Act 2004

Application

Owner:	Gina Utting and Dawn Owens C/- Russell Swain 33 Aragon Avenue Glendowie Auckland 1071
Issue Date:	28 September 2021

Project

Description:	Proposed Separate Garage/Sleepout
Intended use:	7.0.1 Outbuildings
Location:	752 Settlement Road Hakaru
Legal description:	Lot 3 DP 560279
Valuation number:	0122004103

Please Note: This is not an approval to start building work. Please ensure your Building Consent is issued prior to commencing any work. Upon receiving your building consent please check carefully and ensure that compliance with any Conditions, District Planning restrictions or Resource Consent conditions are satisfied. The information below should be read with the understanding that should changes be made at building consent stage then this may alter the requirements listed below.

This project information memorandum does NOT constitute a building consent.

Heritage status of the building

Building work associated with this project will not be affecting land or structures that have heritage status. This project is exempt from the rules of the district plan that relate to heritage buildings.

Notable trees

Council is not aware of there being any notable trees associated with this site. Therefore the project is exempt from the rules of the District Plan that relate to Notable Trees.

Special features of the land concerned

There are no known special features of the land concerned - this includes potential natural hazards, or the likely presence of hazardous contaminants that is likely to be relevant to the design and construction or alteration of the building or proposed buildings; and that is known to the Territorial Authority; and that is not apparent from the district plan under the Resource Management Act 1991.

"Land concerned" means the land on which the proposed building work is to be carried out; and includes any

other land likely to affect or be affected by the building work.

"Special feature of the land concerned" includes, without limitation, potential natural hazards, or the likely presence of hazardous contaminants, that -
a) are likely to be relevant to the design and construction or alteration of the building or proposed building; and
b) is known to the Territorial Authority; and
c) is not apparent from the District Plan under the Resource Management Act 1991.

Other information
Once a Building Consent is issued, the Council will follow up on building work not completed within two years of building consent issue.

A Building Consent lapses and is of no effect if the building work has not been started within 12 months of the date of issue.

If the building is public premises it may not be occupied until either a Code Compliance Certificate or Certificate for Public Use has been issued.

If the building is wholly or partly a dam, a Project Information Memorandum and Building Consent must be obtained from the regional authority.

The Northland Regional Council has a register of contaminated sites. Please contact them on 0800 002 004 if you suspect that your property may be contaminated e.g. historic timber treatment sites, service stations, landfill sites.

Please check your Certificate of Title for any encumbrances (such as easements, section 73 notice) before you make an application for a Building Consent.

All archaeological sites are protected under the provisions of the Historic Places Act 1993. If subsurface archaeological evidence (shell, midden, hangi, storage pits, etc) should be unearthed during construction, work should cease in the immediate vicinity of the remains and the Historic Places Trust should be contacted.

The proposed project complies with the District Plan zoning as it does meet the Rural Zone Rules with a Harbour Overlay.

Consent Notice:12086992.2

Please be advised there are consent notices registered against this property. A breach of these conditions may result in legal action.

Council's desktop assessment has found that the site wind zone rating is high

The Council's desktop assessment has found that the site exposure zone is zone C - Inland

Development Contributions do not apply to this project.

ATTACHMENTS:
-Consent Notices 12086992.2

Notes:
1. The information supplied in the sections of this project information memorandum is specific to the building project to which the application relates by reference to Council files and records. No property inspection, or title search, has been undertaken. To enable the Council to measure the accuracy of this document based on our current records we would appreciate your response should you find any information contained herein which may be considered to be incorrect or omitted. Please telephone the Council (09) 439 3123.

2. The Council has used its best endeavors to ensure that all information provided in this project information memorandum is correct and complete in all material respects. In the event that a material error or omission can be proven the Council's liability, whether in contract or in tort shall be limited to the fee paid to Council to obtain this report.

3. This information reflects the Kaipara District Council's current understanding of information which is relevant to the project. This is based only on the information thus far provided to it and held on record. As a result the Council is not in a position to warrant that the information is complete or without error and accepts no liability for any inaccuracy in, or omission from, this information.

4. The information contained in this project information memorandum is current at the date the memorandum is issued. Further relevant information may come into the Council's possession subsequent to the date of issue.

Kaipara te Oranganui
KAIPARA DISTRICT
Two Oceans Two Harbours

KDC - Approved Building Consent Document - BC210608_PL_ISSUED - Pg 1 of 10 - 29/09/2021 - vsingh

Approved Building Consent Documents

Please note: A copy of the stamped, approved documents must be available onsite for **all** inspections.

KDC - Approved Building Consent Document - BC210608_PL_ISSUED - Pg 2 of 10 - 29/09/2021 - vsingh

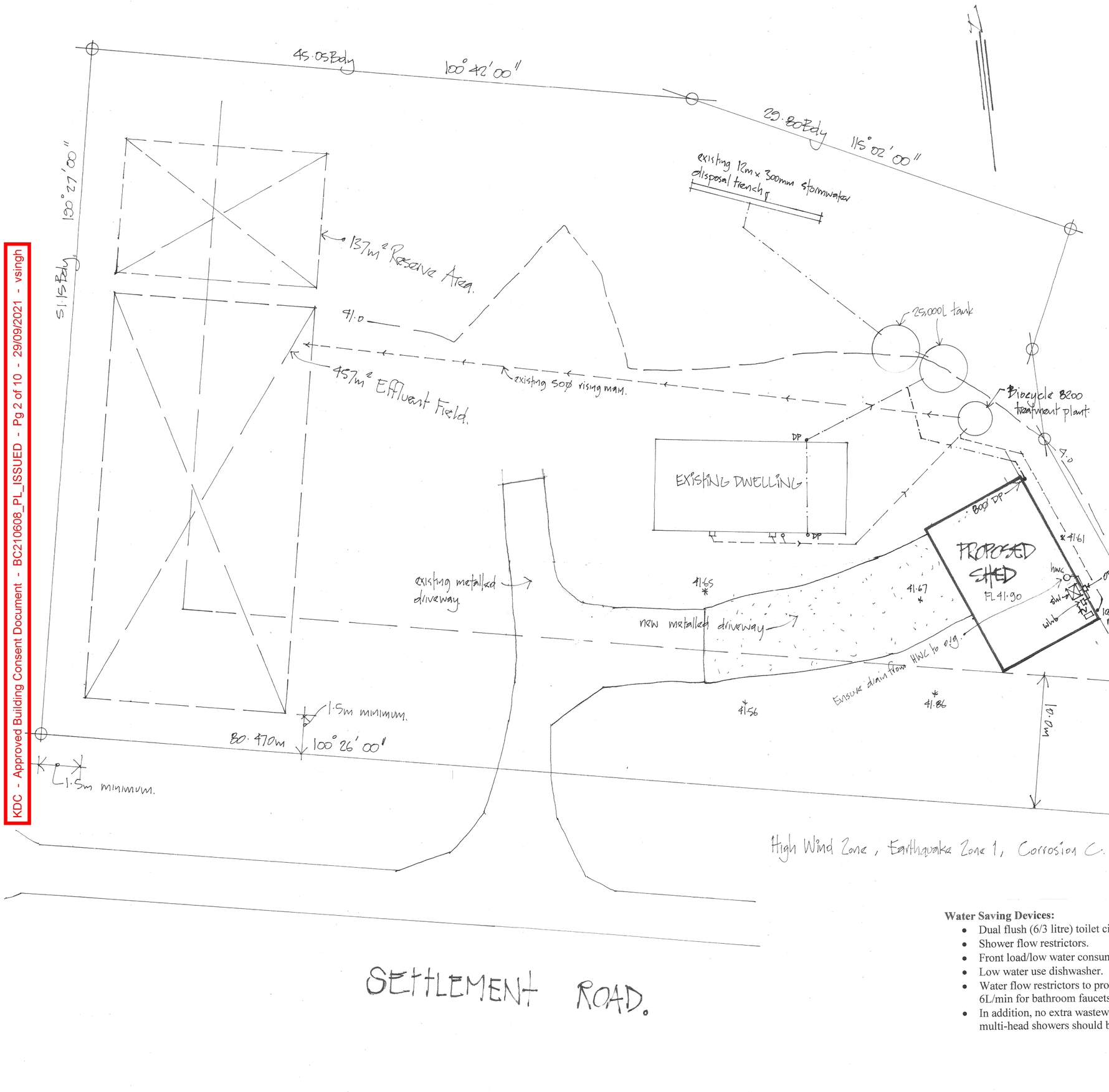

LEGAL DESCRIPTION

Lot3
DP 560279
CT 988296
Area 3,911m2
Zone: Rural Zone

SITE COVERAGE

Existing Dwelling	96.36m2
Proposed Garage/Sleepout	96.00m2
	192.36m2 = 4.92% = complying.

IMPERVIOUS COVERAGE

Site coverage	192.36m2
Existing Impervious coverage (driveway)	60.00m2
Proposed new metal driveway	130.00m2
	382.36m2 = 9.77% = complying.

LANDSCAPING COVERAGE

3,528.64m2 = 90.22% = complying

EXCAVATION

96m2
28.8m3

STORMWATER DRAINAGE

96m2 catchment. 80mm diameter downpipe connects to existing 2x25,000 litre storage tanks.
New 100mm UPVC drain. 1:60 fall minimum.

WASTEWATER

Sink, shower, toilet and whb connect to existing Biocycle 8200 Treatment Plant. Refer attached Wastewater report.
New 100mm UPVC drain. 1:60 fall minimum.

Water Saving Devices:

- Dual flush (6/3 litre) toilet cistern.
- Shower flow restrictors.
- Front load/low water consumption water conserving automatic washing machine.
- Low water use dishwasher.
- Water flow restrictors to provide maximum flows of 9L/min for shower fixtures, 6L/min for bathroom faucets and 10L/min faucets.
- In addition, no extra wastewater producing fixtures including grinders, baths and multi-head showers should be installed.

Water Saving Devices:

- Dual flush (6/3 litre) toilet cistern.
- Shower flow restrictors.
- Front load/low water consumption water conserving automatic washing machine.
- Low water use dishwasher.
- Water flow restrictors to provide maximum flows of 9L/min for shower fixtures, 6L/min for bathroom faucets and 10L/min faucets.
- In addition, no extra wastewater producing fixtures including grinders, baths and multi-head showers should be installed.

A	9/21	Bldg Application
Rev	Date	Issue

Habitat Design Ltd
Architectural Designers
PO Box 25 715
St Heliers, Auckland
021 2519309
Email: russellswain@habitatdesign.co.nz

Client	GINA UTTING
Project	PROPOSED NEW GARAGE/SLEEPOUT 752 SETTLEMENT ROAD KAIWAKA AUCKLAND
Drwg	SITE & DRAINAGE PLAN
Scale 1:200	Sheet No 1
Date SEPT'21	Issue A

KDC - Approved Building Consent Document - BC210608_PL_ISSUED - Pg 3 of 10 - 29/09/2021 - vsingh

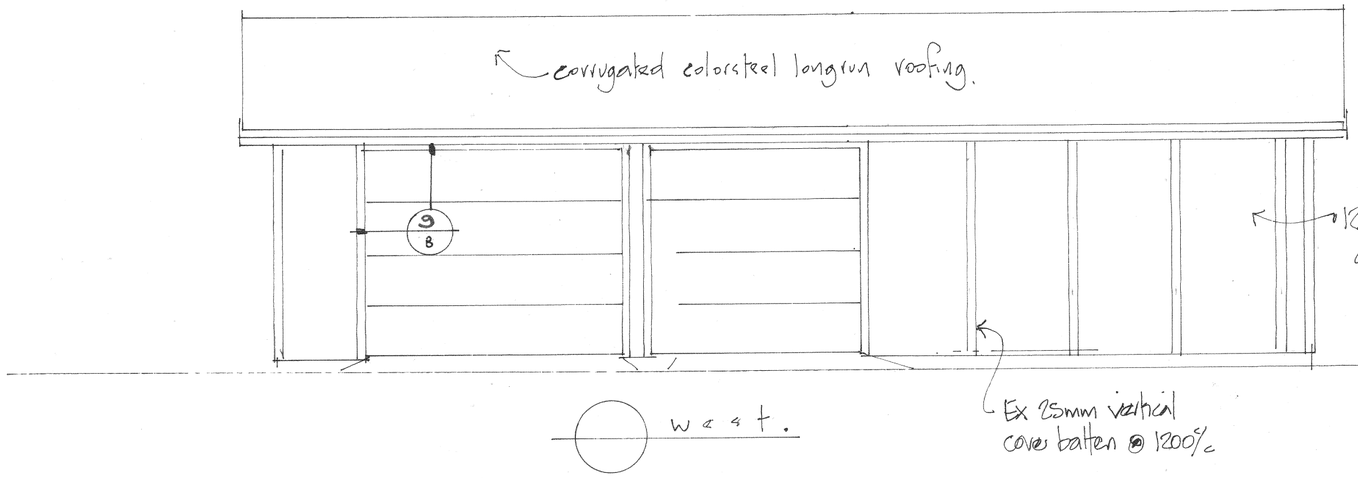

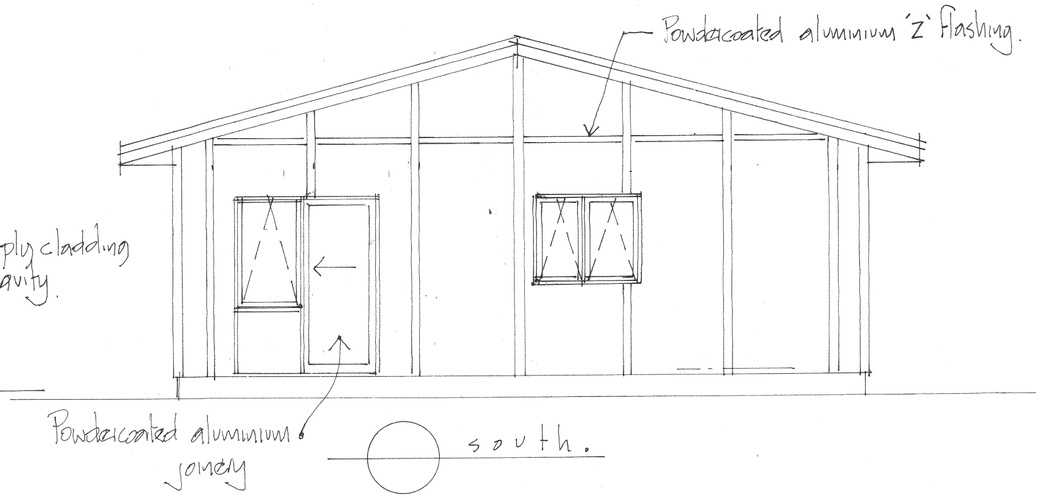

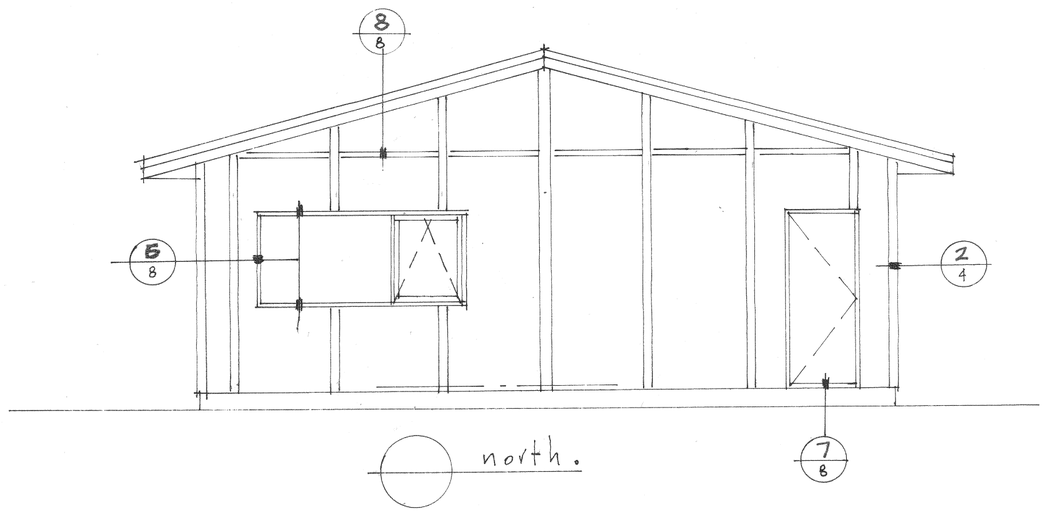

ELEVATION OR WALL: ALL	RISK SEVERITY												
Risk factor	Low			Medium			High			Very high			Subtotals for each risk factor
Wind zone	0			0			1			2			1
Number of storeys	0		0	1			2			4			0
Roof/wall intersection design	0		0	1			3			5			0
Eaves width	0			1			2			5			5
Envelope complexity	0		0	1			3			6			0
Deck design	0		0	2			4			6			0
												Total risk score:	6

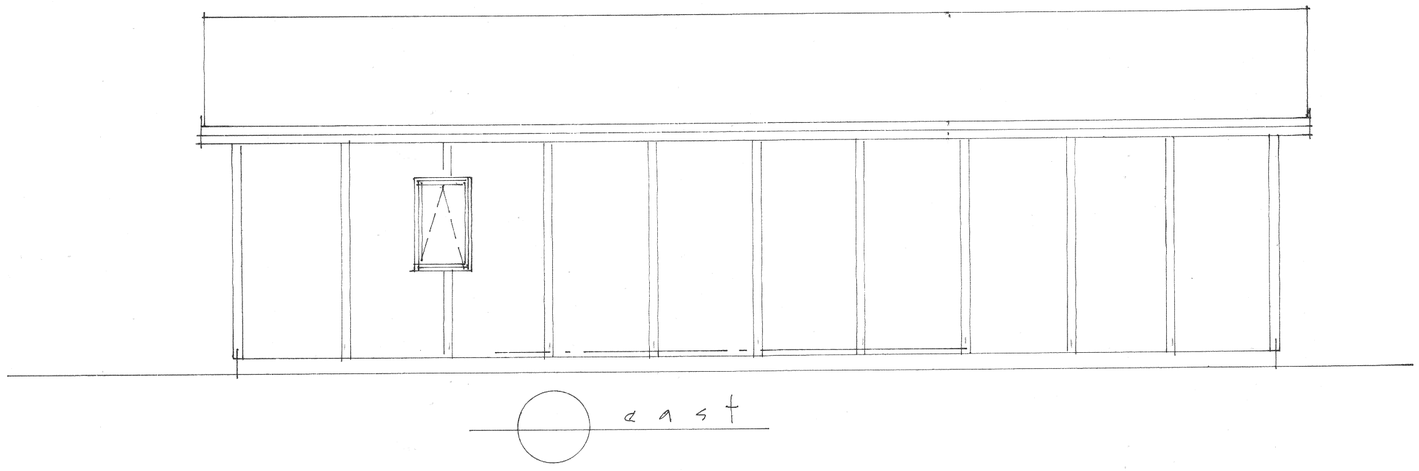

A	9/21	Bldg Application
Rev	Date	Issue

Habitat Design Ltd
Architectural Designers
PO Box 25 715
St Heliers, Auckland
021 2519309
Email: russellswain@habitatdesign.co.nz

Client
GINA UTTING

Project
PROPOSED NEW GARAGE/SLEEPOUT

752 SETTLEMENT ROAD
KAIWAKA
AUCKLAND

Drwg
ELEVATIONS

Scale	Sheet No
1:50	2
Date: SEPT'21	Issue: A

KDC - Approved Building Consent Document - BC210608_PL_ISSUED - Pg 4 of 10 - 29/09/2021 - vsingh

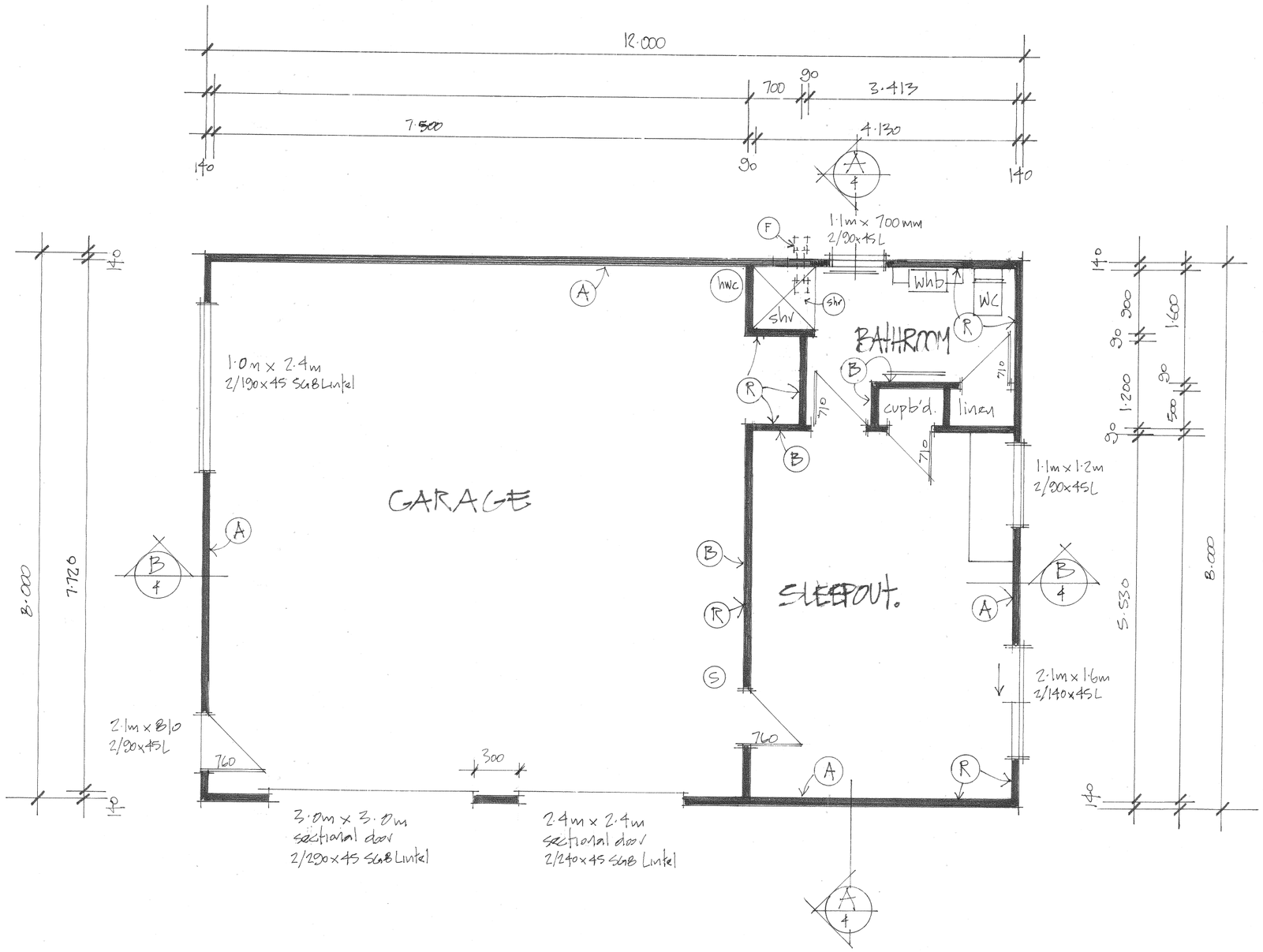

LEGEND

A — External - 90x45 SG8 studs at 400mm c/c.

B — Internal - 90x45 SG8 studs at 600mm c/c.

S — Ensure ceiling mounted smoke alarm – to be 3m maximum from sleep out door.

F — Extract fan ducted to soffit.

Shr — Proprietary shower (acrylic walls and tray).

R — Note: Sleepout/Bathroom to insulated complying with NZS 4218 Schedule Method.
Walls – R2.2 fibreglass batt.
Ceiling – R3.2 fibreglass batt.

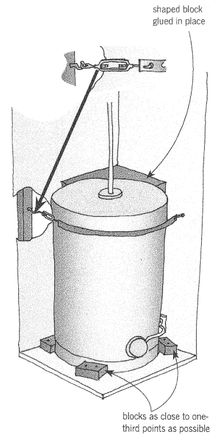

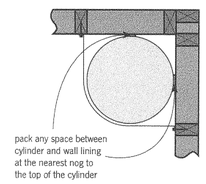

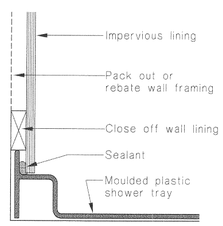

(b) Moulded plastic shower tray

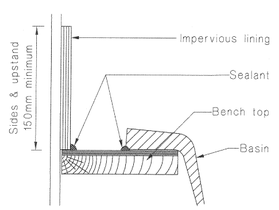

(b) Tub, sink and basin

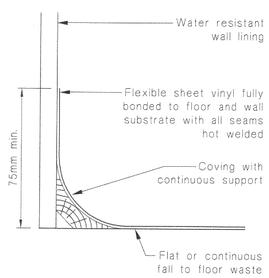

(a) Vinyl floor covering

A	9/21	Bldg Application
Rev	Date	Issue

Habitat Design Ltd
Architectural Designers
PO Box 25 715
St Heliers, Auckland
021 2519309
Email: russellswain@habitatdesign.co.nz

Client
GINA UTTING

Project
PROPOSED NEW GARAGE/SLEEPOUT
752 SETTLEMENT ROAD
KAIWAKA
AUCKLAND

Drwg
FLOOR PLAN

Scale	Sheet No
1:50	3
Date	Issue
SEPT'21	A

KDC - Approved Building Consent Document - BC210608_PL_ISSUED - Pg 5 of 10 - 29/09/2021 - vsingh

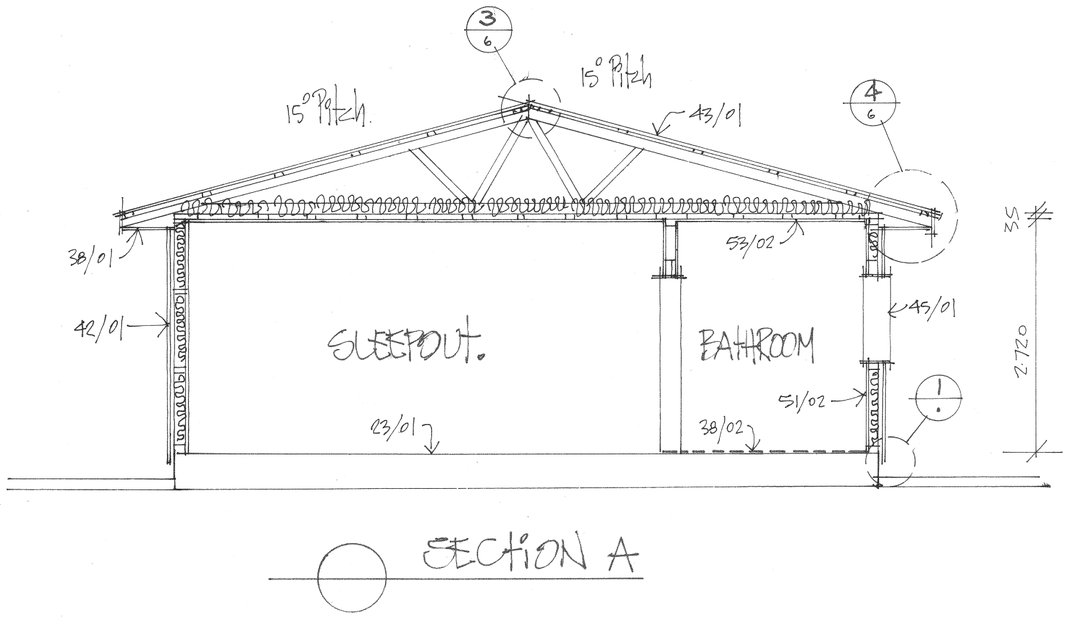

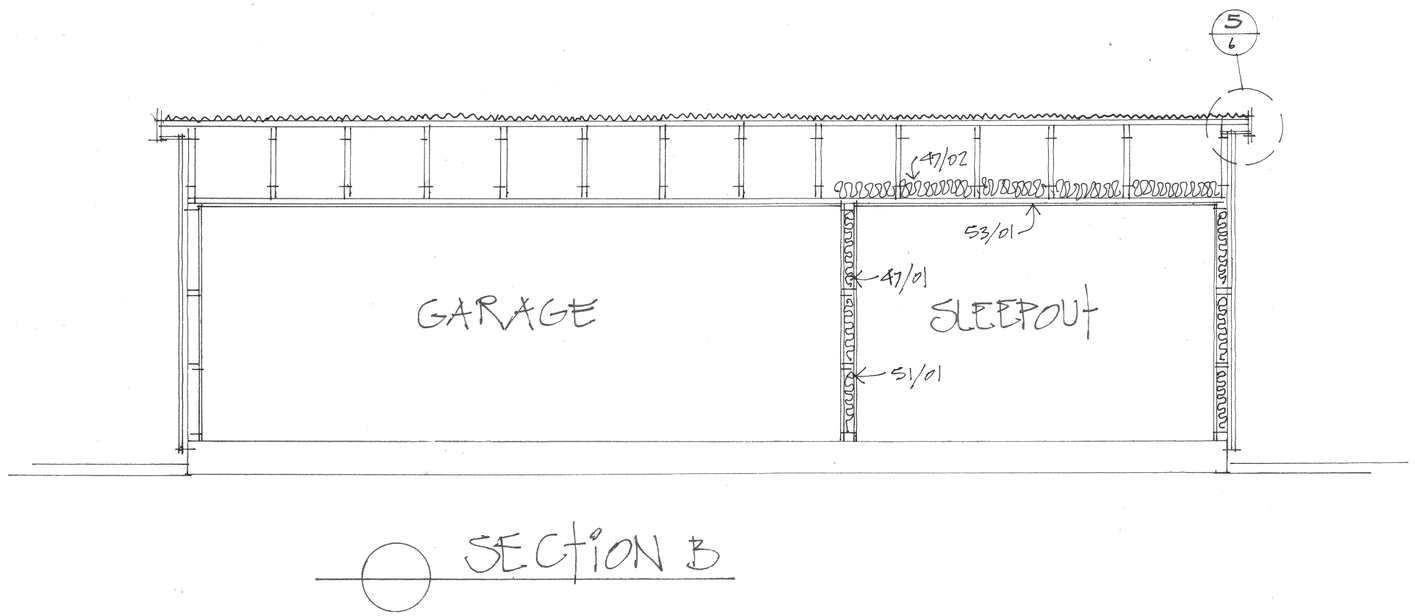

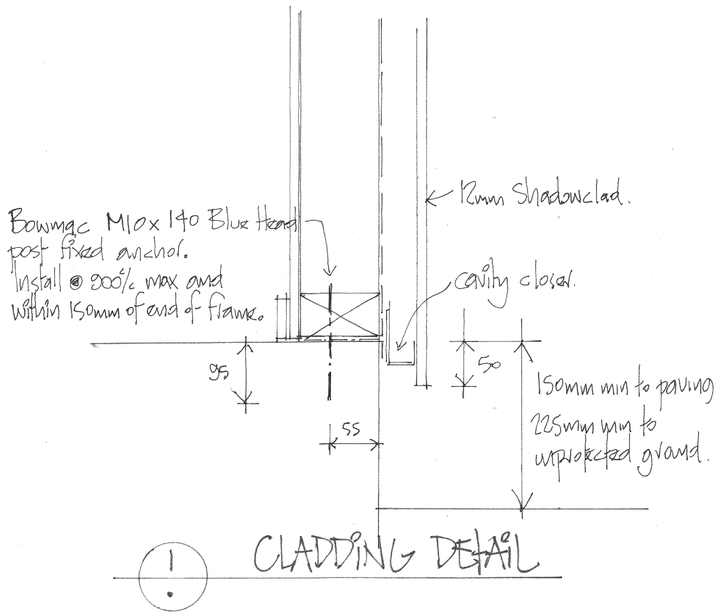

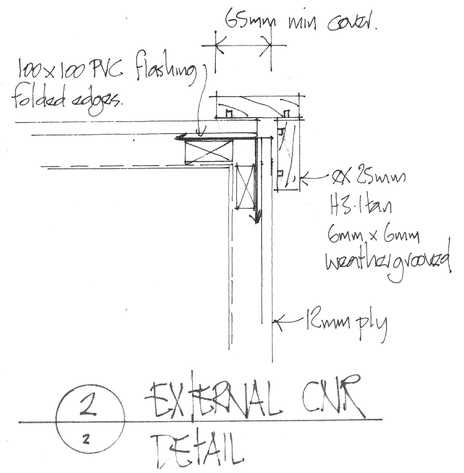

LEGEND

(00) General

PAINTING/STAINING:
Owner to confirm finish/colour to all exposed surfaces/linings.

(23) Foundation

23/01 WAFFLE SLAB: 100mm concrete topping screed (SE72 mesh) on 220mm polystyrene pods on DPC on 50mm minimum sand blinding. Refer Foundation Plan/sht 5.

(38) Timber

38/01 6mm Hardiflex soffit lining, paint finish.
38/02 Vinyl floor finish to bathroom.

(42) External Walls

42/01 12mm Shadowclad plywood cladding on ex50mm x 25mm H3.1tan vertical battens at 600mm c/c maximum on Thermakraft Watergate Plus building wrap.

(43) Roof

43/01 Corrugated Coloursteel longrun roofing on Thermakraft 215 roof underlay on 70x45mm H1.2 SG8 purlins at 900mm c/c maximum (fixing 1/10g self drilling screw x 80mm long) on rafters/trusses at 900mm c/c.

(45) Windows and Doors

45/01 New powder coated double glazed aluminum joinery. Manufacturer Vantage Aluminium.

(47) Insulation

47/01 R2.2 90mm fibreglass batts to wall cavity.
47/02 R3.2 180mm fibreglass insulation flat ceilings.

(51) Partitions and Linings

51/01 10mm Standard GIB BD wall lining.
51/02 13mm Aqualine to wet areas.
Nb: refer sheet 7for wall bracing plan.

(53) Ceilings

53/01 13mm standard GIB BOARD ceiling lining on 70x35mm timber battens at 600mm c/c maximum.
53/02 13mm Aqualine GIB BOARD ceiling lining on 70x35mm timber battens at 600mm c/c maximum.

A	9/21	Bldg Application
Rev	Date	Issue

Habitat Design Ltd
Architectural Designers
PO Box 25 715
St Heliers, Auckland
021 2519309
Email: russellswain@habitatdesign.co.nz

Client
GINA UTTING

Project
PROPOSED NEW GARAGE/SLEEPOUT

752 SETTLEMENT ROAD
KAIWAKA
AUCKLAND

Drwg
SECTIONS A & B

Scale	Sheet No
1:50	4
Date	Issue
SEPT'21	A

KDC - Approved Building Consent Document - BC210608_PL_ISSUED - Pg 6 of 10 - 29/09/2021 - vsingh

Note: 25 MPa Concrete
All ground under the slab shall be free from unsuitable fill.
Builder to remove any unsuitable fill and compact GAP40 to required level.

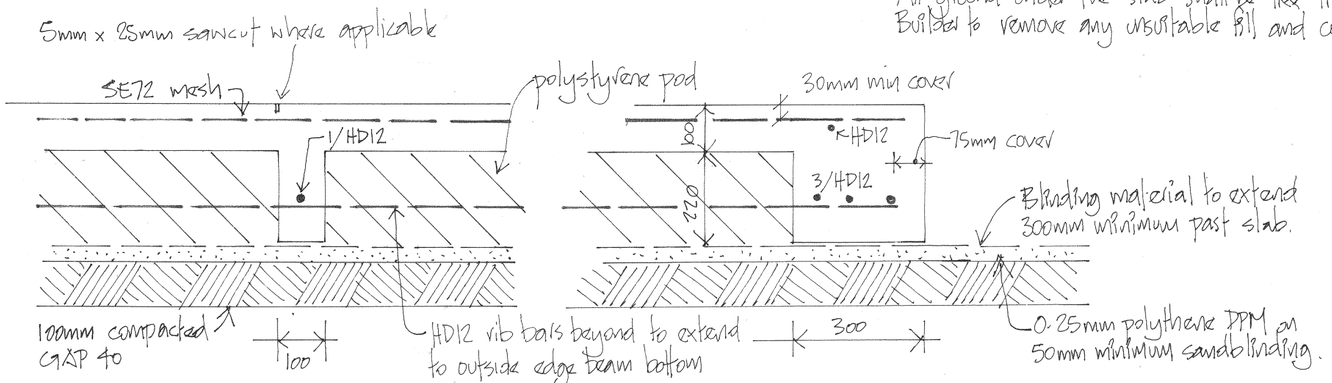

INTERNAL BEAM DETAIL

EXTERNAL BEAM DETAIL

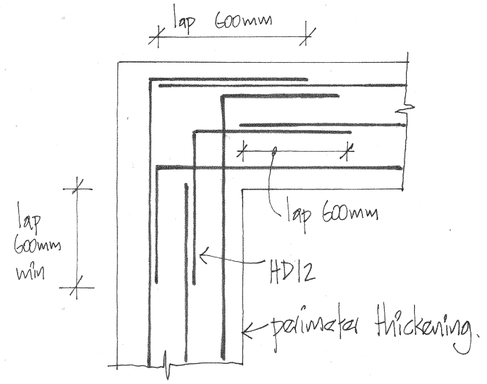

CORNER PLAN DETAIL
EDGE BEAM

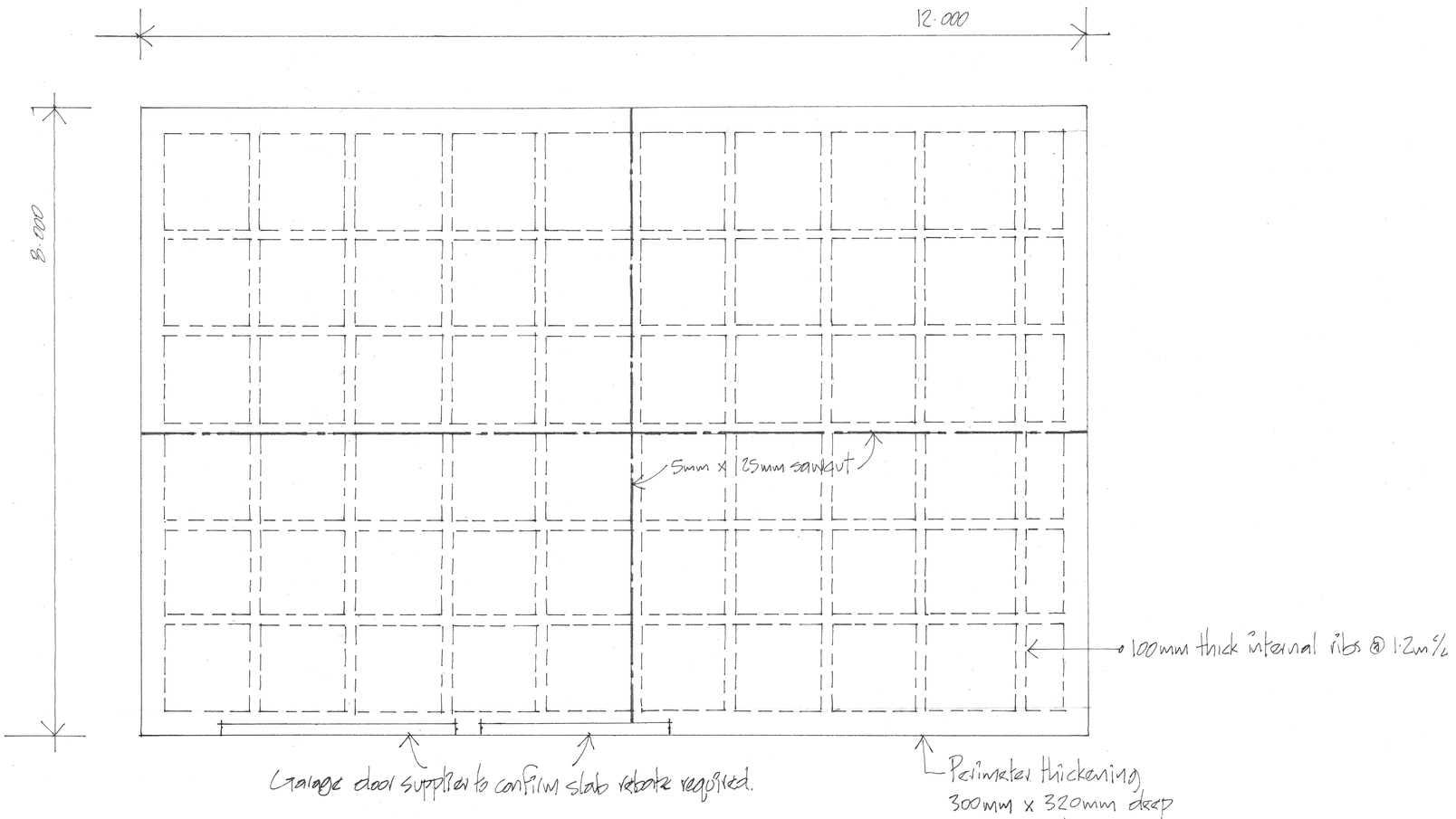

Note:
* No internal loadbearing thickenings required as trussed roof transfers loads to outside walls.
* Wiley Geotechnical to inspect excavation prior to placement of fill or foundation elements.
  Contact: Matt Wiley Mob: 021 0399 385
* Structural Engineer to inspect reinforcing steel prior to concrete placement.
  Contact: Pro Consult ph. 09 973 5781.

ENSURE YOU CHECK COUNCIL DOCUMENTATION OR WITH COUNCIL INSPECTOR REGARDING ANY REQUIREMENT FOR A STRUCTURAL PS4.

IF A STRUCTURAL PS4 IS REQUIRED PLEASE ADVISE PROCONSULT ONE TO TWO DAYS PRIOR TO A NOTIFIABLE INSPECTION.

FAILURE TO HAVE THE STRUCTURAL ENGINEER ON SITE FOR A NOTIFIABLE INSPECTION WILL RESULT IN NO PS4 DURING CCC. THE ENGINEER MUST SIGHT NOTIFIABLE STRUCTURAL ISSUES IN ORDER TO CERTIFY THEM.

CHECKED B1 NZBC by
Stewart Hobbs
BE, MBA, CPEng

Rev	Date	Issue
A	9/21	Bldg Application

Habitat Design Ltd
Architectural Designers
PO Box 25 715
St Heliers, Auckland
021 2519309
Email: russellswain@habitatdesign.co.nz

Client: GINA UTTING

Project: PROPOSED NEW GARAGE/SLEEPOUT
752 SETTLEMENT ROAD
KAIWAKA
AUCKLAND

Drwg: FOUNDATION PLAN

Scale	Sheet No
1:50 1:10	5
Date	Issue
SEPT'21	A

KDC - Approved Building Consent Document - BC210608_PL_ISSUED - Pg 7 of 10 - 29/09/2021 - vsingh

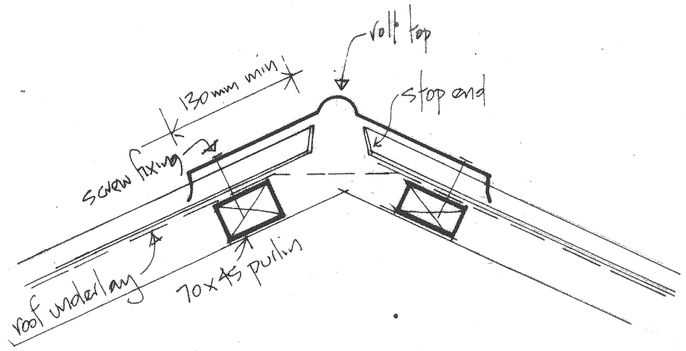

RIDGE DETAIL 3/4

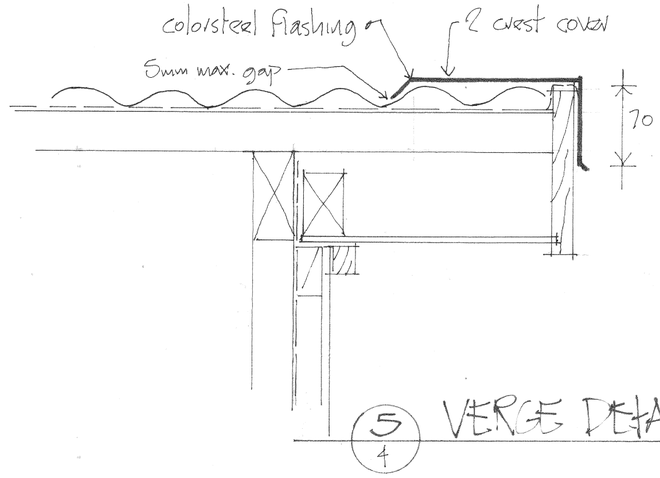

5/4 VERGE DETAIL

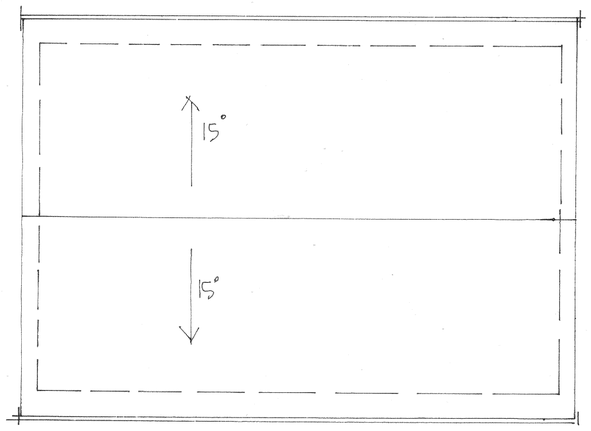

ROOF PLAN

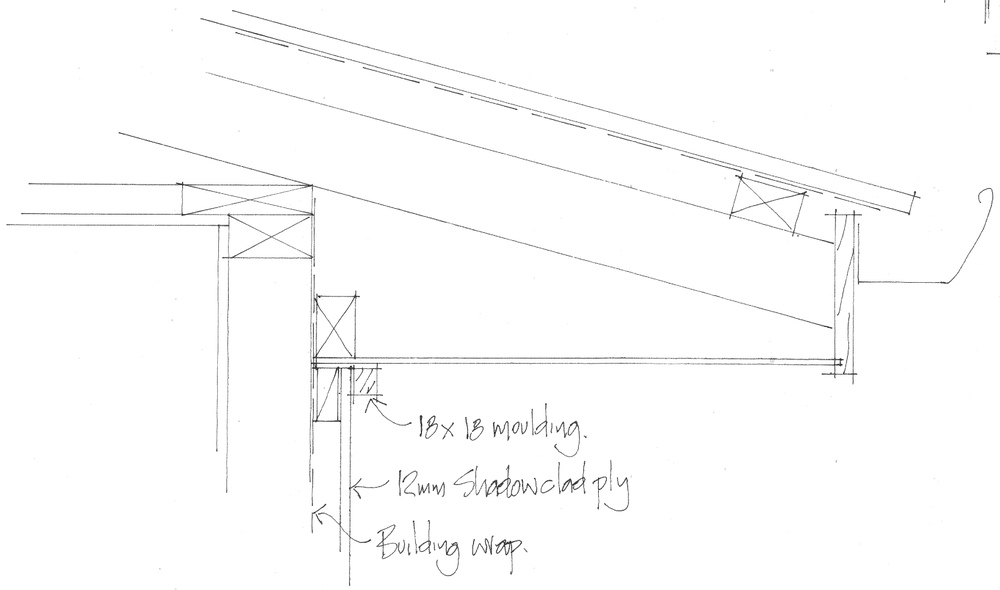

EAVE DETAIL 4/4

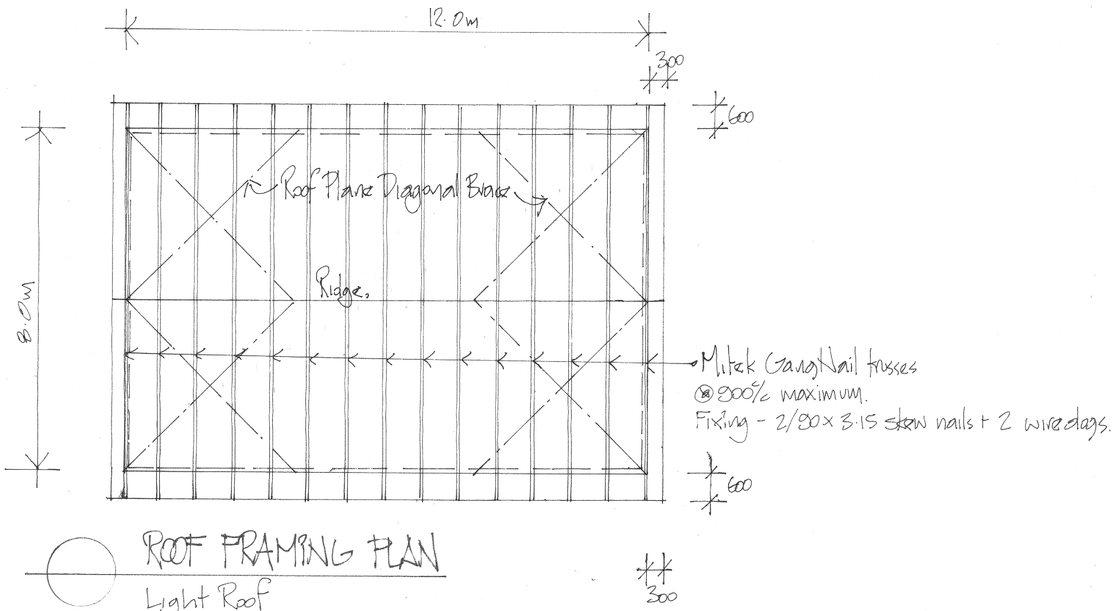

ROOF FRAMING PLAN

Light Roof
15° Pitch
High Wind Zone.

A	9/21	Bldg Application
Rev	Date	Issue

Habitat Design Ltd
Architectural Designers
PO Box 25 715
St Heliers, Auckland
021 2519309
Email: russellswain@habitatdesign.co.nz

Client
GINA UTTING

Project
PROPOSED NEW GARAGE/SLEEPOUT

752 SETTLEMENT ROAD
KAIWAKA
AUCKLAND

Drwg
ROOF FRAMING PLAN & DETAILS

Scale	Sheet No
1:50	6
Date: SEPT'21	Issue: A

KDC - Approved Building Consent Document - BC210608_PL_ISSUED - Pg 8 of 10 - 29/09/2021 - vsingh

GIB EzyBrace® Systems specification GS1-N

Specification code	Minimum length (m)	Lining requirement
GS1-N	0.4	Any 10mm or 13mm GIB® Standard plasterboard to one side only

WALL FRAMING
Wall framing to comply with;

- NZBC B1 — Structure B1/AS1 Clause 3 Timber (NZS 3604:2011).
- NZBC B2 — Durability B2/AS1 Clause 3.2 Timber (NZS 3602).

Framing dimensions and height as determined by NZS 3604:2011 stud and top plate tables for load bearing and non-bearing walls. The use of kiln dried stress graded timber is recommended.

BOTTOM PLATE FIXING
Timber floor
Pairs of hand driven 100 x 3.75mm nails at 600mm centres; or three power driven 90 x 3.15mm nails at 600mm centres.

Concrete floor
Internal Wall Bracing Lines: In accordance with the requirements of NZS 3604:2011 for internal wall plate fixing or 75 x 3.8mm shot fired fasteners with 16mm discs spaced at 150mm and 300mm from end studs and 600mm centres thereafter.

External Wall Bracing Lines: In accordance with the requirements of NZS 3604:2011 for external wall bottom plate fixing.

WALL LINING
- Any 10mm or 13mm GIB® plasterboard lining.
- Sheets can be fixed vertically or horizontally.
- Sheet joints shall be touch fitted.
- Use full length sheets where possible.

PERMITTED ALTERNATIVES
For permitted GIB® plasterboard alternatives refer to p. 5 in GIB EzyBrace® Systems literature.

FASTENING THE LINING
Fasteners
32mm x 6g GIB® Grabber® High Thread Screws, 32mm x 7g GIB® Grabber® Dual Thread Screws or 30mm GIB® Nails. If using the GIBFix® Angle use only 32mm x 7g GIB® Grabber® Dual Thread Screws.

Fastener centres
50,100,150, 225, 300mm maximum from each corner and 150mm thereafter around the perimeter of the bracing element. For vertically fixed sheets place fasteners at 300mm maximum centres to intermediate sheet joints. For horizontally fixed sheets place single fasteners to the sheet edge where it crosses the stud. Use daubs of GIBFix® adhesive at 300mm maximum centres to intermediate studs. Place fasteners no closer than 12mm from paper bound sheet edges and 18mm from any sheet end or cut edge.

JOINTING
Joint strength is important in delivering bracing system performance. All fastener heads stopped and all sheet joints GIB® Joint Tape reinforced and stopped in accordance with the GIB® Site Guide.

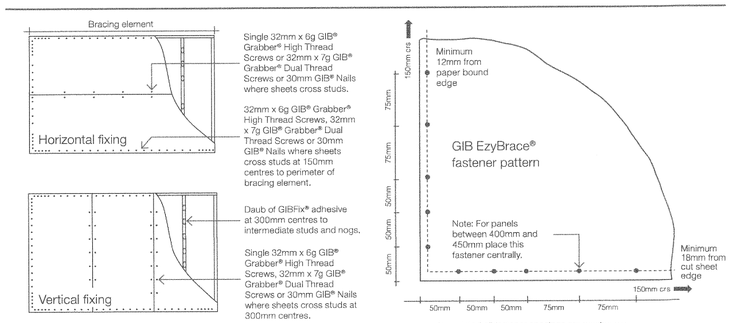

In order for GIB® systems to perform as tested, all components must be installed exactly as prescribed. Substituting components produces an entirely different system and may seriously compromise performance. Follow the specifications. This specification sheet is issued in conjunction with the publication GIB EzyBrace® Systems

GIB EzyBrace® Systems specification BL1-H

Specification code	Minimum length (m)	Lining requirement	Other requirements
BL1-H	0.4	10mm or 13mm GIB Braceline® to one side only	Hold downs

WALL FRAMING
Wall framing to comply with;

- NZBC B1 — Structure B1/AS1 Clause 3 Timber (NZS 3604:2011).
- NZBC B2 — Durability B2/AS1 Clause 3.2 Timber (NZS 3602).

Framing dimensions and height as determined by NZS 3604:2011 stud and top plate tables for load bearing and non-bearing walls. The use of kiln dried stress graded timber is recommended.

BOTTOM PLATE FIXING
Timber floor
Use panel hold downs at each end of the bracing element. The GIB HandiBrac® is recommended. See details in GIB EzyBrace® Systems or GIB® Site Guide.

Pairs of hand driven 100 x 3.75mm nails at 600mm centres; or Three power driven 90 x 3.15mm nails at 600mm centres.

Concrete floor
Use panel hold downs at each end of the bracing element. The GIB HandiBrac® is recommended. See details in GIB EzyBrace® Systems or GIB® Site Guide. Within the length of the bracing element bottom plates are to be fixed in accordance with the requirements of NZS 3604:2011.

WALL LINING
- A layer of 10mm or 13mm GIB Braceline®
- Sheets can be fixed vertically or horizontally.
- Sheet joints shall be touch fitted.
- Use full length sheets where possible.

PERMITTED ALTERNATIVES
For permitted GIB® plasterboard alternatives refer to p. 5 in GIB EzyBrace® Systems literature.

FASTENING THE LINING
Fasteners
32mm x 6g GIB® Grabber® High Thread Screws or 32mm x 7g GIB® Grabber® Dual Thread Screws. If using the GIBFix® Framing System or if fastening through GIBFix® Angles use only 32mm x 7g GIB® Grabber® Dual Thread Screws.

Fastener centres
50,100,150, 225, 300mm from maximum each corner and 150mm thereafter around the perimeter of the bracing element. For vertically fixed sheets place fasteners at 300mm maximum centres to the sheet joint. For horizontally fixed sheets place single fasteners to the sheet edge where it crosses the stud. Use daubs of GIBFix® adhesive at 300mm maximum centres to intermediate studs. Place fasteners no closer than 12mm from paper bound sheet edges and 18mm from any sheet end or cut edge.

JOINTING
Joint strength is important in delivering bracing system performance. All fastener heads stopped and all sheet joints GIB® Joint Tape reinforced and stopped in accordance with the GIB® Site Guide.

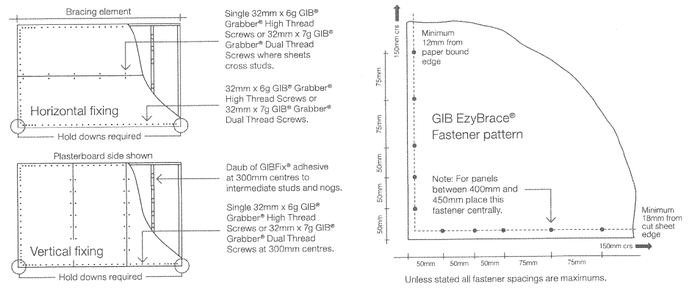

In order for GIB® systems to perform as tested, all components must be installed exactly as prescribed. Substituting components produces an entirely different system and may seriously compromise performance. Follow the specifications. This specification sheet is issued in conjunction with the publication GIB EzyBrace® Systems

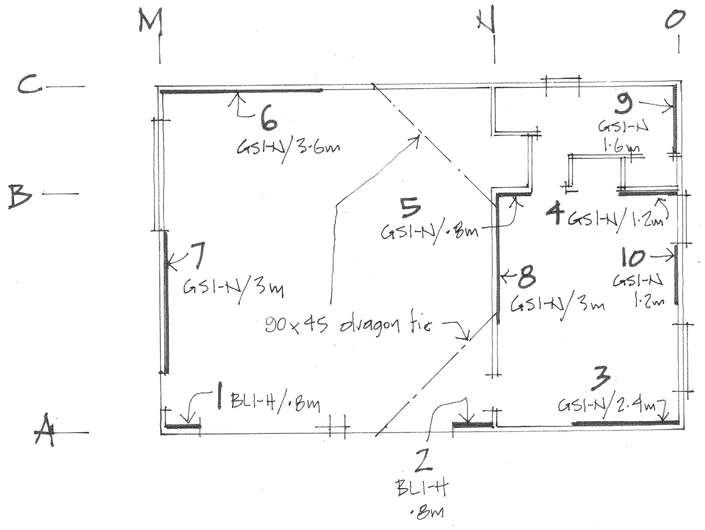

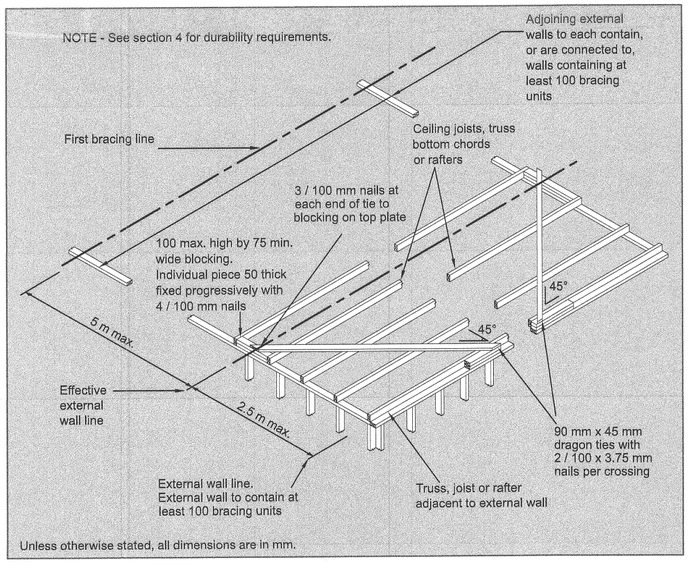

Figure 8.1 – Dragon ties (see 8.3.3.1)

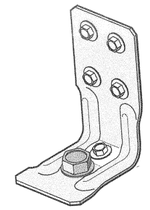

GIB HandiBrac® installation

Developed in conjunction with MiTek™, the GIB HandiBrac® has been designed and tested by Winstone Wallboards for use in GIB EzyBrace® elements that require hold-downs. The GIB HandiBrac® is a substitute for bottom plate hold-down straps.

- Quick and easy to fit.
- May be fitted at any stage before lining.
- Framing face is clear to allow flush lining.
- Easily inspected.

The GIB HandiBrac® with BOWMAC® blue head screw bolt is suitable for timber and concrete floors constructed in accordance with NZS 3604:2011.

Concrete floor	
External walls	Internal walls
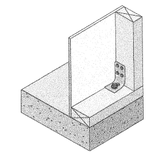 GEB009	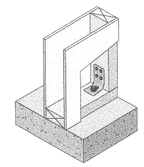 GEB010
Position GIB HandiBrac® as close as practicable to the internal edge of the bottom plate.	Position GIB HandiBrac® at the stud/plate junction and at mid-width of plate.
Hold-down fastener requirements	
A mechanical fastening with a minimum characteristic uplift capacity of 15kN or use supplied BT10/140 screwbolt in GIB HandiBrac® pack.	

A	9/21	Bldg Application
Rev	Date	Issue

Habitat Design Ltd
Architectural Designers
PO Box 25 715
St Heliers, Auckland
021 2519309
Email: russellswain@habitatdesign.co.nz

Client
GINA UTTING

Project
PROPOSED NEW GARAGE/SLEEPOUT
752 SETTLEMENT ROAD
KAIWAKA
AUCKLAND

Drwg
WALL BRACING PLAN

Scale	Sheet No
1:100	7
Date	Issue
SEPT'21	A

KDC - Approved Building Consent Document - BC210608_PL_ISSUED - Pg 9 of 10 - 29/09/2021 - vsingh

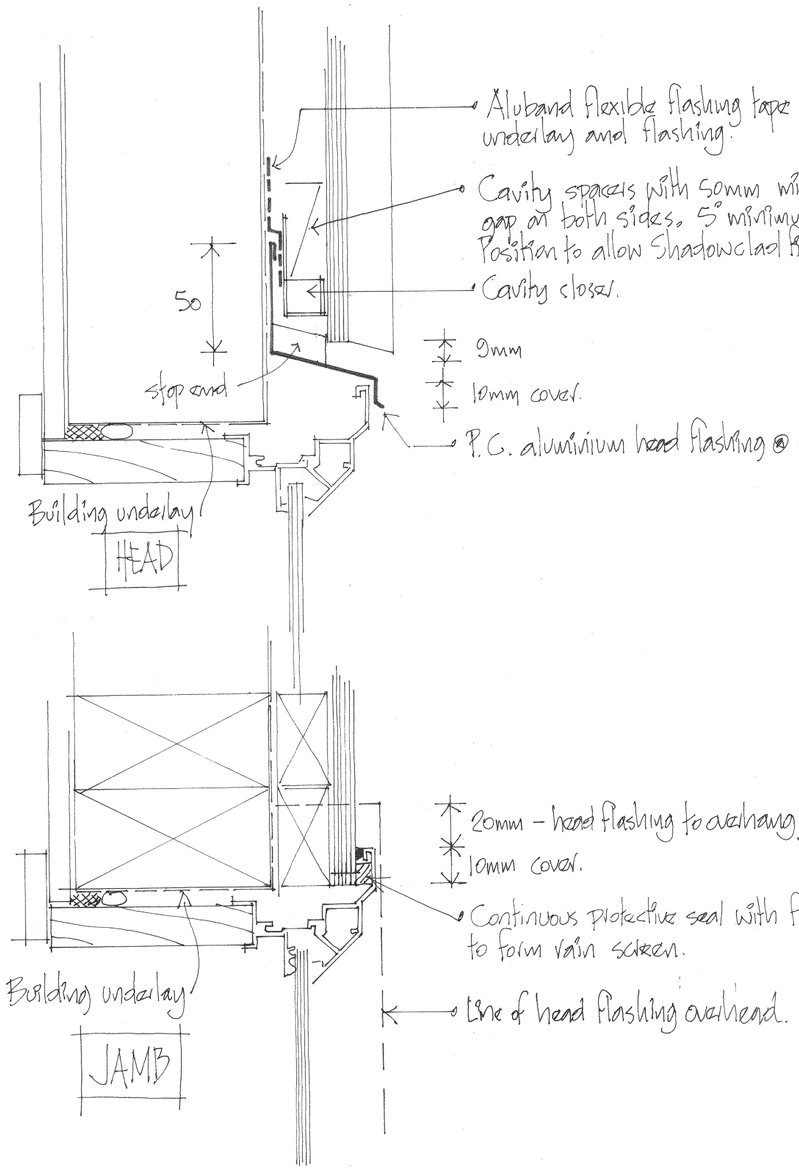

ALUMINIUM JOINERY DETAIL 6/2

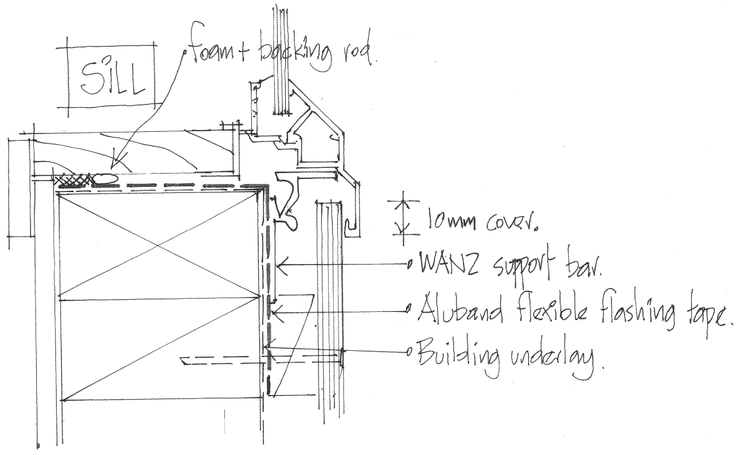

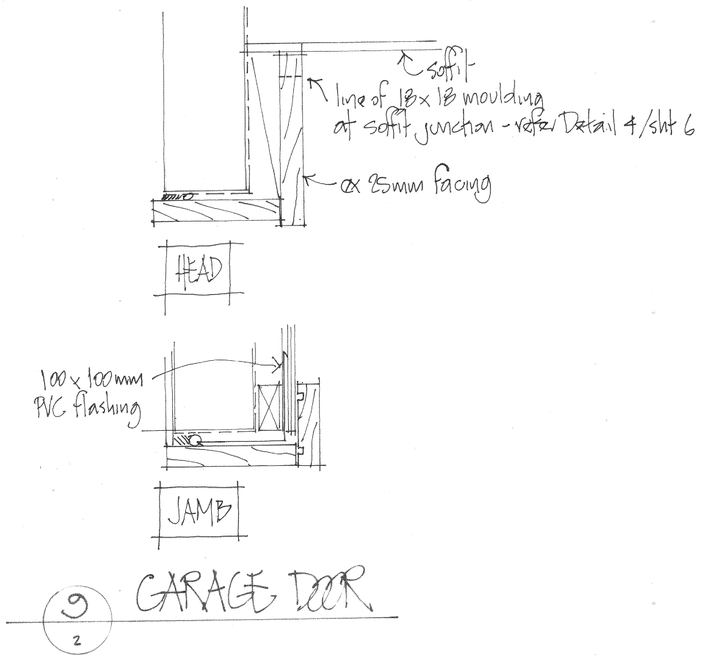

9/2 GARAGE DOOR

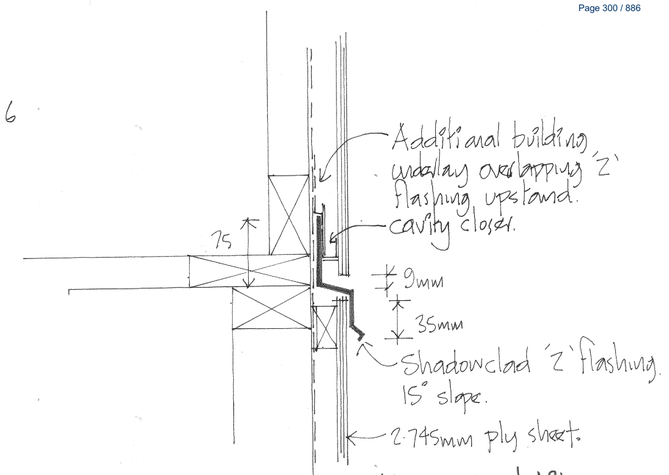

8/2 'Z' FLASHING DETAIL

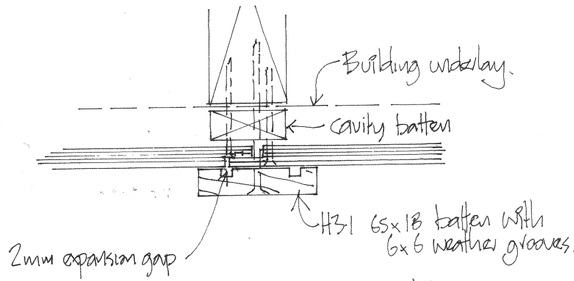

10/2 SHADOWCLAD VERTICAL JOINT

Figure 72B: General window and door opening with drainage cavity

NOTE:
(1) Detailed *cladding* omitted for clarity, refer to specific *claddings*.
(2) Head to be treated similarly with continuous *wall underlay* and *flexible tape* at corners.
(3) Refer individual cladding details for jamb flashings.

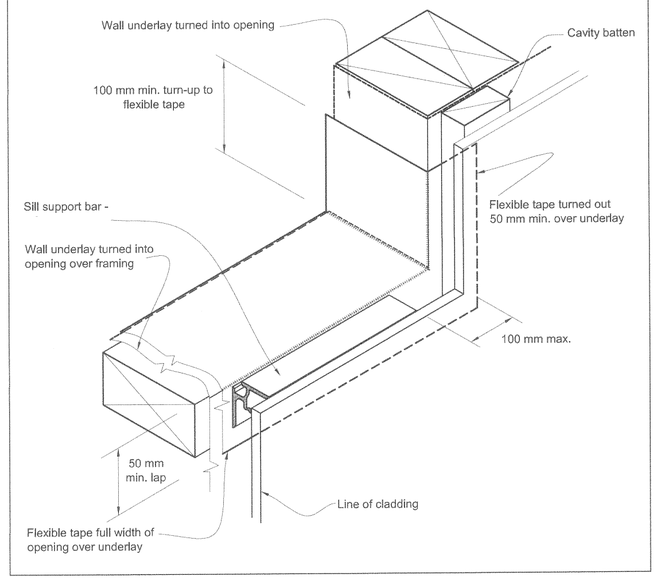

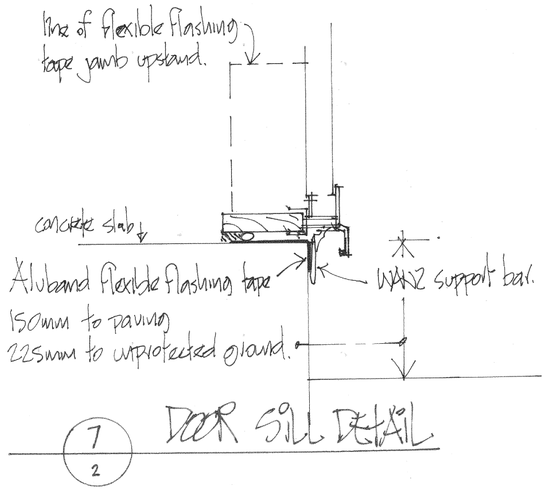

7/2 DOOR SILL DETAIL

Rev	Date	Issue
A	9/21	Bldg Application

Habitat Design Ltd
Architectural Designers
PO Box 25 715
St Heliers, Auckland
021 2519309
Email: russellswain@habitatdesign.co.nz

Client	GINA UTTING
Project	PROPOSED NEW GARAGE/SLEEPOUT 752 SETTLEMENT ROAD KAIWAKA AUCKLAND
Drwg	DETAILS
Scale 1:5	Sheet No 8
Date SEPT'21	Issue A

KDC - Approved Building Consent Document - BC210608_PL_ISSUED - Pg 10 of 10 - 29/09/2021 - vsingh

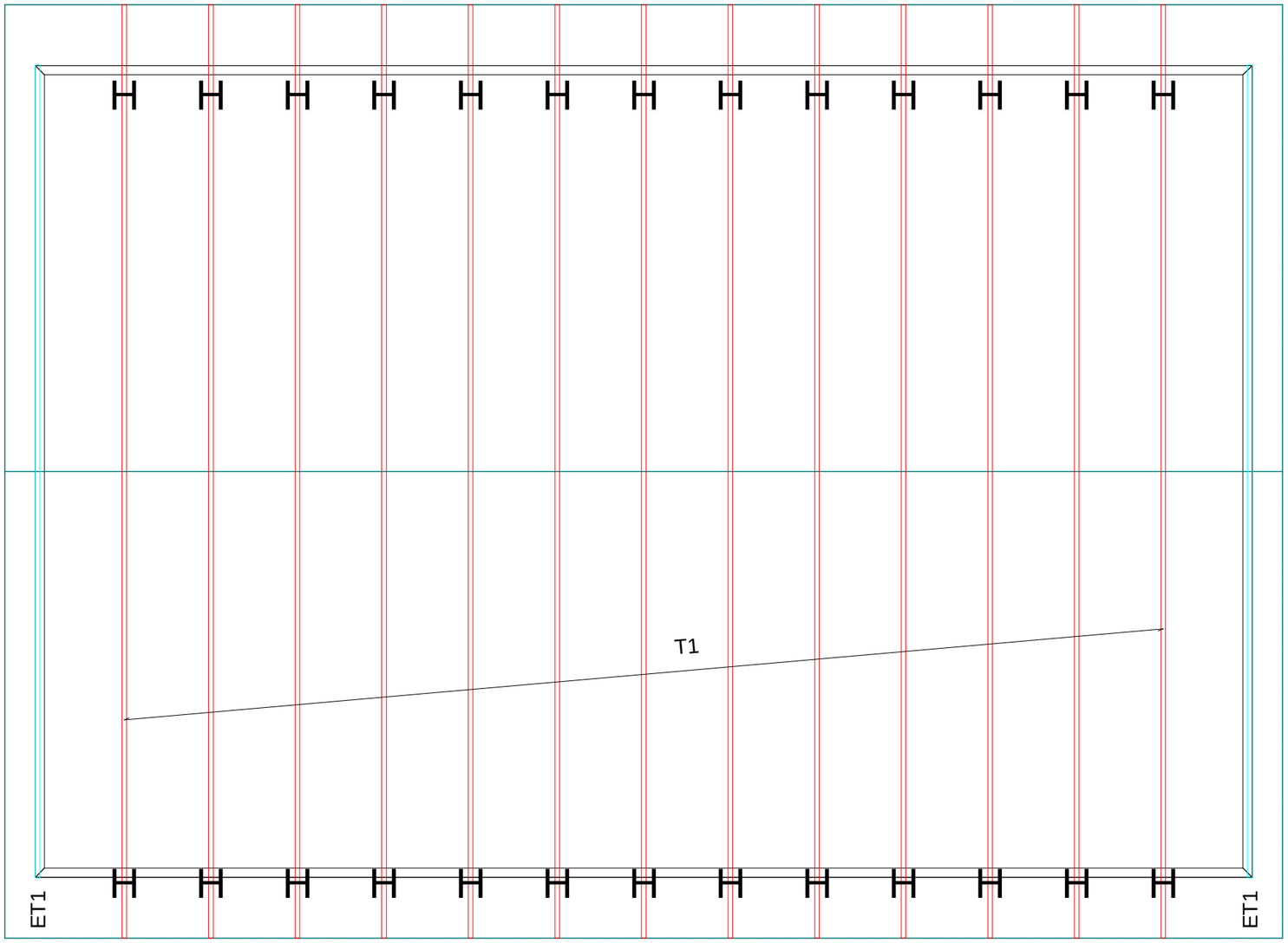

Buildable Truss Layout
for consent purposes only.
Not for construction.

All walls drawn assumed load bearing

NOTES
Roof & Ceiling bracing
as per permit plans otherwise
to comply with NZS3604

Builder to confirm all soffit details
with Fascia manufacturer.

All members requiring bastard cuts
are left long for builder to cut on site.

KEY TO TRUSS FIXINGS:
D - Pair of LUMBERLOK Wire Dogs
X - LUMBERLOK JH47x90 Joist Hanger
Z - LUMBERLOK JH47x120 Joist Hanger
P - LUMBERLOK JH47x190 Joist Hanger
E - LUMBERLOK JH95x165 Joist Hanger
O - Pair of LUMBERLOK CT200 Ceiling Ties
H - LUMBERLOK CT400 Cyclone Tie
M - Pair of LUMBERLOK Multi Grips
S1 - SPH140 LUMBERLOK Split Hangers
S2 - SPH180 LUMBERLOK Split Hangers
S3 - SPH220 LUMBERLOK Split Hangers
K - LUMBERLOK TTP 16kN Truss to Top Plate set

ALL GABLE END TRUSSES TO USE WIRE DOG [STAPLE] EITHER END. BALANCE of TRUSSES to USE 2/WIRE DOGS EITHER END, OR AS APPLICABLE. JACK RAFTERS & HIP BLADES TO USE 2/90x3.15mm dia SKEW NAILS UNLESS OTHERWISE NOTED

FTMA NEW ZEALAND

DISCLAIMER:
Dysart Manufacturing Ltd will not consider any claims for the correction of any pre-cut errors unless prior consultation has taken place and approval has been granted. Dysart Manufacturing Limited does not agree to pay any waiting time.

Roof Material = Light
Ceiling Material = Standard
on Ex 75x40 strapping @ 400 ctrs
Pitch = 15.0 deg
Design Wind Velocity = 44.0 (m/s)
Overhang = 300 / 600
Fascia Type = Selected Fascia
Treatment = H1.2 to all Trusses & BoR

DYSART

Dysart Manufacturing Ltd
88 Merton Road, Glen Innes

Phone: (09) 521-3609
(Press 2 for Manufacturing)

MiTek

PROJECT
HABITECH
752 SETTLEMENT RD
KAIWAKA

DRAWING TITLE;
ROOF LAYOUT PLAN

SCALE	DESIGN	DATE
NTS		20 Aug,2021

DRAWING No.	DRAWN	REVISION
0949-21	Andy Hackshaw	

KDC - Approved Building Consent Document - BC210608_SD_ISSUED - Pg 1 of 125 - 29/09/2021 - vsingh

Approved Building Consent Documents

Please note: A copy of the stamped, approved documents must be available onsite for **all** inspections.

Thermakraft™



Thermakraft
ONE WRAP SYSTEM
10 Products - One system
One warranty

KDC - Approved Building Consent Document - BC210608_SD_ISSUED - Pg 2 of 125 - 29/09/2021 - vsingh

Product Data Sheet

ALUBAND

Bituminous adhesive flexible window flashing tape.

Aluband is designed specifically as a premium window flashing tape and forms part of the Thermakraft One Wrap System. Made with a heavy bituminous adhesive, the product provides high strength bond and excellent abrasion resistance.

Aluband comes in four roll sizes:

Product Code	Roll Size	Rolls Per Carton
ALU075025	75mm x 25m	12
ALU150010	150mm x 10m	6
ALU150025	150mm x 25m	6
ALU200025	200mm x 25m	4

Smarter products. Better buildings.
thermakraft.co.nz

BRANZ Appraised
Appraisal No.878 [2019]

Thermakraft

Aluband

Bituminous adhesive flexible window flashing tape.

KDC - Approved Building Consent Document - BC210608_SD_ISSUED - Pg 3 of 125 - 29/09/2021 - vsingh

Scope of Use

Thermakraft Aluband Window Flashing Tapes can be used within the following scope:

- Installed into and around frame joinery opening over the wall underlay and exposed frame to cover both the face and edge of the opening framing as a secondary weather resistant barrier.
- Installed at joinery heads to seal flashing upstands to the wall underlay.
- To assist the overall weathertightness performance of window and door joinery installations.
- To be used in conjunction with air seals and joinery flashing systems. Installer must check for air seal product compatibility with Aluband Window Flashing Tape.
- Thermakraft Aluband Window Flashing Tape must be used with Thermakraft Corner Moulded Pieces (on windowsill corners).
- Situated in NZS3604 Wind Zones up to, and including 'Extra High'.

General

- Compatible with all Thermakraft building underlays.
- Unaffected by LOSP or other solvent based treated timber. However, LOSP or other solvent based treated timber must have sufficient time for the solvent chemical to flash off in well ventilated area. Recommended minimum 7 days.
- Thermakraft corner moulds MUST be used at flashing corners (see installation guide).

Limitations

- Must NOT be exposed to the weather/UV for more than 42 days.
- Should be installed when temperatures are above 5ºC.
- NOT designed to overcome poor detailing and workmanship of the window or door joinery installation.
- Bitumen may react with window sealants. Always check compatibility before use.

Compliance:

- Aluband should be used within the product scope limitations of NZBC Acceptable Solution E2/AS1, Paragraph 1.1;
- Can be used on buildings constructed with timber and steel framing complying with the NZBC;
- With a risk score of 0-20, calculated in accordance with NZBC Acceptable Solution E2/AS1, Table 2; and,
- Can be used with wall cladding systems complying with NZBC Acceptable Solution E2/AS1.

Durability:

- Thermakraft Aluband Window Flashing Tape will meet the Performance Requirements of NZBC Clauses B2, Durability (B2.3.1 [a] 50 years*, B2.3.1 [b] 15 years* and B2.3.2), E2 External Moisture Performance and F2 Hazardous Building Materials.

* **Note:** When the external cladding is maintained according to the cladding manufacturer's instructions and the cladding remains weather resistant, Thermakraft Aluband Window Flashing Tape is expected to have a serviceable life equal to that of the cladding.

- Thermakraft Aluband Window Flashing Tape has a serviceable life expectancy equal to that of the cladding, when installed in accordance with this technical specification and in accordance to the product installation guide, provided it is not exposed to the weather or ultra-violet (UV) light for more than 42 days, or is not damaged upon installation.
- Thermakraft Aluband Window Flashing Tape is designed to work on all building underlays that meet the requirements of NZBC E2/AS1 Table 23, and on all Thermakraft BRANZ Appraised wall underlays.

Product Warranty

Standard Thermakraft warranty applies. Refer to Thermakraft Warranty Statement for further details. This is available online at **thermakraft.co.nz** or call **0800 806 595.**

Thermakraft Limited / 0800 806 595

Smarter products. Better buildings.

thermakraft.co.nz

BRANZ Appraised
Appraisal No.878 [2019]

The recommendations contained in Thermakraft's literature are based on good building practice, but are not an exhaustive statement of all relevant information and are subject to any conditions contained in the Warranty. All product dimensions and performance claims are subject to any variation caused by normal manufacturing process and tolerances. Furthermore, as the successful performance of the relevant system depends on numerous factors outside the control of Thermakraft (for example quality of workmanship and design), Thermakraft shall not be liable for the recommendations in that literature and the performance of the Product, including its suitability for any purpose or ability to satisfy the relevant provisions of the Building Code, regulations and standards. Literature subject to change without notification. Latest documentation can be found on the website. E&OE.

Issue 5, January 2020

RDD - Approved Building Consent [Acceptance] - BCA1003_SR_(SBLD)_BP-4 (1) - 29/09/2021 - Sergio

CODEMARK®

Certificate No: BRANZ-CM-1002-Rev 1

Date of Issue: 02 March 2021

Recertification Date: 11 January 2022

CERTIFICATE HOLDER

Thermakraft™

Thermakraft Limited
11 Turia Place
East Tamaki
Auckland, 2013
New Zealand

Tel: 0800 806 595
Email: info@thermakraft.co.nz
Web: www.thermakraft.co.nz

Client signature

William Lin

Customer Name William Lin
Customer Position Head of Engineering and Inventory
Thermakraft Limited

CERTIFICATION BODY

BRANZ

BRANZ Limited
1222 Moonshine Rd,
RD1, Porirua 5381
Private Bag 50 908
Porirua 5240,
New Zealand

Tel: 04 237 1170
Email: assuranceservices@branz.co.nz
Web: branz.nz

Chelydra Lacy

Chelydra Percy
Chief Executive Officer
BRANZ Limited

PRODUCT CERTIFICATE

THIS IS TO CERTIFY

WATERGATE PLUS WALL UNDERLAY

KEY INFORMATION

1. DESCRIPTION OF BUILDING METHOD OR PRODUCT

1.1 Watergate Plus is a white coloured flexible synthetic wall underlay. The product is printed with the Watergate Plus logo repeated along the length of the roll.

2. USE OF BUILDING METHOD OR PRODUCT

2.1 Watergate Plus is for use as a flexible wall underlay for buildings within the following scope:

- the scope limitations of NZBC Acceptable Solution E2/AS1, Paragraph 1.1 for timber framed buildings; or,
- the scope limitations of NASH Building Envelope Solutions, Paragraph 1.1 for steel framed buildings; and
- with direct fixed wall claddings, or with wall claddings installed over a drained cavity; or,
- with masonry veneer in accordance with NZBC Acceptable Solution E2/AS1 for timber framed buildings or in accordance with NASH Building Envelope Solutions for steel framed buildings; and,
- situated in NZS 3604: 2011 Wind Zones up to and including Very High when fixed directly to framing, and Extra High when fixed over a rigid air barrier.

2.2 Watergate Plus is also for use:

- as an air barrier in accordance with NZBC Acceptable Solution E2/AS1 or NASH Building Envelope Solutions Paragraph 9.1.4 (c); or,
- as a non-rigid backing material for stucco plaster in accordance with the requirements of NZBC Acceptable Solution E2/AS1 or NASH Building Envelope Solutions, Paragraph 9.3.5.1, or;
- as a slip layer over a rigid backing for stucco cladding in accordance with NZBC Acceptable Solution E2/AS1 or NASH Building Envelope Solutions, Paragraph 9.3.3.1 (b).

3. COMPLIES WITH THE FOLLOWING PROVISIONS OF THE NEW ZEALAND BUILDING CODE (NZBC)

Clause B2 DURABILITY: Performance B2.3.1 (a), not less than 50 years (for when the cladding durability requirement is not less than 50 years), B2.3.1 (b), 15 years (for when the cladding durability requirement is 15 years) and B2.3.2 (a).

Clause C3 FIRE AFFECTING AREAS BEYOND THE FIRE SOURCE: Performance C3.4 (c).

Clause E2 EXTERNAL MOISTURE: Performance E2.3.2.

Clause F2 HAZARDOUS BUILDING MATERIALS: Performance F2.3.1.

JAS-ANZ

www.jas-anz.org/register

The Certificate Holder must maintain compliance with the conditions set out in Regulation 15 of the Building (Product Certification) Regulations 2008.

This Certificate is issued by BRANZ Limited, an independent certification body accredited by the product certification body appointed by the Chief Executive of the Ministry of Business, Innovation and Employment (MBIE) under the Building Act 2004. MBIE does not in any way warrant, guarantee or represent that the building method or product the subject of this certificate conforms with the New Zealand Building Code, nor accept any liability arising out of the use of the building method or product. MBIE disclaims, to the extent permitted by law, all liability (including negligence) for claims of losses, expenses, damages and costs arising as a result of the use of the building method(s) or products(s) referred to in this certificate.

It is advised to check that this Product Certificate is currently valid and not withdrawn, suspended or superseded by a later issue, by referring to the MBIE website, www.mbie.govt.nz

This certificate may only be reproduced in its entirety.

Information regarding BRANZ's complaints process can be found at the following link: Complaints Process

CODEMARK®

Certificate No: BRANZ-CM-1002-Rev 1

Date of Issue: 02 March 2021

Recertification Date: 11 January 2022

CERTIFICATE HOLDER

Thermakraft™

Thermakraft Limited
11 Turia Place
East Tamaki
Auckland, 2013
New Zealand

Tel: 0800 806 595
Email: info@thermakraft.co.nz
Web: www.thermakraft.co.nz

Client signature

William Lin

Customer Name William Lin
Customer Position Head of Engineering and Inventory
Thermakraft Limited

CERTIFICATION BODY

BRANZ

BRANZ Limited
1222 Moonshine Rd,
RD1, Porirua 5381
Private Bag 50 908
Porirua 5240,
New Zealand

Tel: 04 237 1170
Email: assuranceservices@branz.co.nz
Web: branz.nz

Chelydra Percy
Chief Executive Officer
BRANZ Limited

RDD - Approved Building Consent [Acquired] - BCA1003_ST_DSBLED_P5 11:29/09/2021 Sergio

4. CONDITIONS AND LIMITATIONS OF USE

4.1 Watergate Plus Wall Underlay must not be exposed to the weather or ultra violet light for more than 60 days before being covered by the wall cladding.

4.2 Framing studs must be at a maximum of 600 mm centres. Timber framing must be in accordance with NZS 3604: 2011 or to a specific design. Steel framing must be in accordance with NASH Building Envelope Solutions.

5. HEALTH AND SAFETY INFORMATION

5.1 Watergate Plus is a synthetic wall underlay. The supplier's instructions and typical practices for working with and handling synthetic wall underlays should be observed.

6. REFERENCE DOCUMENTS

6.1 This Product Certificate must be read in conjunction with:

- BRANZ Appraisal No. 695 (2017) Watergate Plus Wall Underlay.
- Technical Literature: Product Data Sheet Watergate Plus, Issue 8, dated January 2020; and,
- Technical Literature: Installation Guide Watergate Plus, Issue 3, dated December 2020.

SCHEDULE: INFORMATION THAT SUPPORTS KEY INFORMATION

7. SUPPORTING INFORMATION ABOUT DESCRIPTION OF THE BUILDING METHOD

PRODUCT SPECIFICATION

7.1 Watergate Plus is for use as a flexible wall underlay fixed over timber or steel framed walls to limit the entry of wind into building cavities, and to act as a secondary barrier to wind-driven rain.

7.2 Watergate Plus is suitable for use under wall claddings as a wall underlay as called up in NZBC Acceptable Solution E2/AS1 Table 23 for timber framed buildings and NASH Building Envelope Solutions Table 23 for steel framed buildings. This includes non-absorbent wall claddings such as vinyl and metal-based weatherboards in direct fixed situations.

7.3 Watergate Plus is a synthetic building underlay manufactured from a film coated, non-woven, laminated flexible synthetic fabric. Watergate Plus is coloured white on the top and bottom faces and is printed with the Watergate Plus logo, and can also be co-branded with custom printing.

7.4 The product is supplied in rolls 1.370 m wide x 18.5 m, 37.0 m and 73.0 m long; 2.740 m wide x 18.5 m and 36.5 m long. The rolls are wrapped in clear polythene film.

JAS-ANZ

www.jas-anz.org/register

The Certificate Holder must maintain compliance with the conditions set out in Regulation 15 of the Building (Product Certification) Regulations 2008.

This Certificate is issued by BRANZ Limited, an independent certification body accredited by the product certification body appointed by the Chief Executive of the Ministry of Business, Innovation and Employment (MBIE) under the Building Act 2004. MBIE does not in any way warrant, guarantee or represent that the building method or product the subject of this certificate conforms with the New Zealand Building Code, nor accept any liability arising out of the use of the building method or product. MBIE disclaims, to the extent permitted by law, all liability (including negligence) for claims of losses, expenses, damages and costs arising as a result of the use of the building method(s) or products(s) referred to in this certificate.

It is advised to check that this Product Certificate is currently valid and not withdrawn, suspended or superseded by a later issue, by referring to the MBIE website, www.mbie.govt.nz

This certificate may only be reproduced in its entirety.

Information regarding BRANZ's complaints process can be found at the following link: Complaints Process

CODEMARK®

Certificate No: BRANZ-CM-1002-Rev 1

Date of Issue: 02 March 2021

Recertification Date: 11 January 2022

CERTIFICATE HOLDER

Thermakraft

Thermakraft Limited
11 Turia Place
East Tamaki
Auckland, 2013
New Zealand

Tel: 0800 806 595
Email: info@thermakraft.co.nz
Web: www.thermakraft.co.nz

Client signature

William Lin

Customer Name William Lin
Customer Position Head of Engineering and Inventory
Thermakraft Limited

CERTIFICATION BODY

BRANZ

BRANZ Limited
1222 Moonshine Rd,
RD1, Porirua 5381
Private Bag 50 908
Porirua 5240,
New Zealand

Tel: 04 237 1170
Email: assuranceservices@branz.co.nz
Web: branz.nz

Chelydra Percy

Chelydra Percy
Chief Executive Officer
BRANZ Limited

RDD - Applied Building Consent [Acquired] - BCA1003 - SS_DBSLIED - BCA1003_SS_DBSLIED_P56 (1).pdf - 29/09/2021 - Sergio

TABLE 1: NZBC E2/AS1 TABLE 23 (NZS 2295:2006) REQUIREMENTS

NZBC E2/AS1 Table 23 (NZS 2295: 2006) Wall Underlay Properties	**Property Performance Requirement**	**Actual Property Performance**
Vapour Resistance	≤ 7 MN s/g	Pass
Absorbency	≥ 100 g/m²	Pass
Water Resistance	≥ 20 mm	Pass
pH of Extract	≥ 6.0 and ≤ 9.0	Pass
Shrinkage	≤ 0.5%	Pass
Mechanical	Edge tear and tensile strength	Edge tear (Average): Machine direction = 77 N (Note 1) Cross direction = 56 N (Pass) Tensile strength (Average): Machine direction = 2.5 kN/m (Pass) Cross direction = 1.8 kN/m (Pass)
Air Barrier	Air resistance: ≥ 0.1 MN s/m³	Pass. Watergate Plus is suitable for use as an air barrier.

Note 1: Pass of BRANZ criteria for edge tear resistance.

8. SUPPORTING INFORMATION ABOUT INTENDED USE OF THE PRODUCT

DESIGN REQUIREMENTS

8.1 Separation or protection must be provided to Watergate Plus Wall Underlay from heat sources such as fire places, heating appliances, flues and chimneys. Part 7 of NZBC Acceptable Solutions C/AS1, C/AS2 and NZBC Verification Method C/VM1 provide methods for separation and protection of combustible materials from heat sources.

INSTALLATION REQUIREMENTS

8.2 Installation must be carried out in accordance with the following:

- Technical Literature: Product Data Sheet Watergate Plus, Issue 8, dated January 2020; and,
- Technical Literature: Installation Guide Watergate Plus, Issue 3, dated December 2020; and
- NZBC Acceptable Solution E2/AS1; or
- NASH Building Envelope Solutions.

JAS-ANZ

www.jas-anz.org/register

The Certificate Holder must maintain compliance with the conditions set out in Regulation 15 of the Building (Product Certification) Regulations 2008.

This Certificate is issued by BRANZ Limited, an independent certification body accredited by the product certification body appointed by the Chief Executive of the Ministry of Business, Innovation and Employment (MBIE) under the Building Act 2004. MBIE does not in any way warrant, guarantee or represent that the building method or product the subject of this certificate conforms with the New Zealand Building Code, nor accept any liability arising out of the use of the building method or product. MBIE disclaims, to the extent permitted by law, all liability (including negligence) for claims of losses, expenses, damages and costs arising as a result of the use of the building method(s) or products(s) referred to in this certificate.

It is advised to check that this Product Certificate is currently valid and not withdrawn, suspended or superseded by a later issue, by referring to the MBIE website, www.mbie.govt.nz

This certificate may only be reproduced in its entirety.

Information regarding BRANZ's complaints process can be found at the following link: Complaints Process

CODEMARK®

Certificate No: BRANZ-CM-1002-Rev 1

Date of Issue: 02 March 2021

Recertification Date: 11 January 2022

CERTIFICATE HOLDER

Thermakraft Limited
11 Turia Place
East Tamaki
Auckland, 2013
New Zealand

Tel: 0800 806 595
Email: info@thermakraft.co.nz
Web: www.thermakraft.co.nz

Client signature

William Lin

Customer Name William Lin
Customer Position Head of Engineering and Inventory
Thermakraft Limited

CERTIFICATION BODY

BRANZ Limited
1222 Moonshine Rd,
RD1, Porirua 5381
Private Bag 50 908
Porirua 5240,
New Zealand

Tel: 04 237 1170
Email: assuranceservices@branz.co.nz
Web: branz.nz

Chelyda Percy
Chief Executive Officer
BRANZ Limited

RDA - Approved Building Consent [Acquired] - BCA1002_SS_DSIUD_PE7 (1) - 29/09/2021 - Design

MAINTENANCE REQUIREMENTS

8.3 No maintenance can be performed on Watergate Plus once the cladding is installed.

BUILDING CODE

B1 STRUCTURE

8.4 Watergate Plus is suitable for use in all Wind Zones of NZS 3604: 2011 up to, and including, Very High when used as a stand-alone flexible wall underlay and all Wind Zones of NZS 3604: 2011 up to, and including, Extra High when used as an overlay for rigid building underlays.

B2 DURABILITY

8.5 Watergate Plus meets code compliance with NZBC Clause B2.3.1 (a), not less than 50 years for building underlays used where the cladding durability requirement or expected serviceable life is not less than 50 years, e.g. behind masonry veneer, and code compliance with NZBC Clause B2.3.1 (b), 15 years for building underlays used where the cladding durability requirement is 15 years. Watergate Plus is expected to have a serviceable life equal to that of the cladding.

C3 FIRE AFFECTING AREAS BEYOND THE FIRE SOURCE

8.6 Watergate Plus has an AS 1530 - 1993 Part 2 flammability index of not greater than 5 and therefore meets the requirements of NZBC Acceptable Solution C/AS2, Paragraph 4.17.8 b) for suspended flexible fabric used as an underlay to exterior cladding that is exposed to view in occupied spaces.

E2 EXTERNAL MOISTURE

8.7 Watergate Plus must be used behind claddings that meet the requirements of the NZBC, such as those covered by NZBC Acceptable Solution E2/AS1 or NASH Building Envelope Solutions.

9. SUPPORTING INFORMATION ABOUT CONDITIONS AND LIMITATIONS OF USE

9.1 All conditions and limitations provided as stated in this Product Certificate.

10. BASIS FOR CODEMARK CERTIFICATION

10.1 The following tests have been carried out on Thermakraft Watergate Plus Wall Underlay in accordance with NZBC Acceptable Solution E2/AS1, Table 23:

- tensile strength, edge-tear resistance and resistance to water vapour transmission in accordance with AS/NZS 4200.1: 1994
- shrinkage in accordance with AS/NZS 4201.3:1994
- resistance to water penetration in accordance with AS/NZS 4201.4: 1994
- surface water absorbency in accordance with AS/NZS 4201.6: 1994
- pH of extract in accordance with AS/NZS 1301.421s: 1998
- air resistance to BS 6538.3:1987.

10.2 Ultraviolet (UV) light ageing of wall underlays is a critical evaluation requirement to verify a products continued performance after site construction exposure. UV aging of Watergate Plus equivalent to 60 days construction site exposure was completed and the range of tests detailed above were repeated after aging.

10.3 The Flammability Index of Thermakraft Watergate Plus Wall Underlay has been evaluated in accordance with AS 1530.2 - 1993.

10.4 BRANZ Expert Judgement (Materials Scientist) confirmation of compliance to the NZBC Clause B2 Durability Performance Requirements.

10.5 The practicability of installation of Thermakraft Watergate Plus Wall Underlay has been assessed by BRANZ and found to be satisfactory.

10.6 The referenced Technical Literature has been examined by BRANZ and found to be satisfactory.

JAS-ANZ
www.jas-anz.org/register

The Certificate Holder must maintain compliance with the conditions set out in Regulation 15 of the Building (Product Certification) Regulations 2008.

This Certificate is issued by BRANZ Limited, an independent certification body accredited by the product certification body appointed by the Chief Executive of the Ministry of Business, Innovation and Employment (MBIE) under the Building Act 2004. MBIE does not in any way warrant, guarantee or represent that the building method or product the subject of this certificate conforms with the New Zealand Building Code, nor accept any liability arising out of the use of the building method or product. MBIE disclaims, to the extent permitted by law, all liability (including negligence) for claims of losses, expenses, damages and costs arising as a result of the use of the building method(s) or products(s) referred to in this certificate.

It is advised to check that this Product Certificate is currently valid and not withdrawn, suspended or superseded by a later issue, by referring to the MBIE website, www.mbie.govt.nz

This certificate may only be reproduced in its entirety.

Information regarding BRANZ's complaints process can be found at the following link: Complaints Process

CODEMARK®

Certificate No: BRANZ-CM-1002-Rev 1

Date of Issue: 02 March 2021

Recertification Date: 11 January 2022

CERTIFICATE HOLDER

Thermakraft™

Thermakraft Limited
11 Turia Place
East Tamaki
Auckland, 2013
New Zealand

Tel: 0800 806 595
Email: info@thermakraft.co.nz
Web: www.thermakraft.co.nz

Client signature

William Lin

Customer Name William Lin
Customer Position Head of Engineering and Inventory
Thermakraft Limited

CERTIFICATION BODY

BRANZ

BRANZ Limited
1222 Moonshine Rd,
RD1, Porirua 5381
Private Bag 50 908
Porirua 5240,
New Zealand

Tel: 04 237 1170
Email: assuranceservices@branz.co.nz
Web: branz.nz

Chelyda Percy

Chelyda Percy
Chief Executive Officer
BRANZ Limited

RDD - Approved Building Consent [Acquired] - BCA1002_SS_DISPLAY_R58 | 1 | 29/09/2021 | Stephen Keogh

11. RESPONSIBILITIES FOR USE OF CERTIFIED PRODUCT

- The quality of supply to the market is the responsibility of Thermakraft Limited.
- Building designers are responsible for the design of the building, and for the incorporation of the wall underlay into their design in accordance with the instructions of Thermakraft Limited.
- Quality of installation is the responsibility of the installer in accordance with the instructions of Thermakraft Limited.

12. DOCUMENTATION SUPPORTING CERTIFICATION

- AS 1530.2 – 1993 Test for flammability of materials.
- AS/NZS 1301.421s: 1998 Determination of the pH value of aqueous extracts of paper, board and pulp – cold extraction method.
- AS/NZS 4200.1: 1994 Pliable building membranes and underlays – materials.
- AS/NZS 4201.1: 1994 Pliable building membranes and underlays – Methods of test – Resistance to dry delamination.
- AS/NZS 4201.2: 1994 Pliable building membranes and underlays – Methods of test – Resistance to wet delamination.
- AS/NZS 4201.3: 1994 Pliable building membranes and underlays – Methods of test – Shrinkage.
- AS/NZS 4201.4: 1994 Pliable building membranes and underlays – Methods of test – Resistance to water penetration.
- AS/NZS 4201.6: 1994 Pliable building membranes and underlays – Methods of test – Surface water absorbency.
- ASTM D882:2012 Standard test method for tensile properties of thin plastic sheeting.
- ASTM E96/E96M:2016 Standard test methods for water vapor transmission of materials.
- ASTM G155:2013 Standard practice for operating xenon arc light apparatus for exposure of non-metallic underlays.
- BS 6538.3: 1987 Method for determination of air permeance using the Garley apparatus.
- NZS 2295: 2006 Pliable, permeable building underlays.
- NZS 3604: 2011 Timber-framed buildings.
- TAPPI T470:1986 Edge tearing resistance of paper (Edge-tear stirrup method)
- Ministry of Business, Innovation and Employment Record of amendments - Acceptable Solutions, Verification Methods and handbooks.
- The Building Regulations 1992.

13. CONDITIONS RELATING TO NOTIFICATION

13.1 The certificate holder Thermakraft Ltd must notify the product certification body (BRANZ) in writing, of any intended change to any of the following particulars:

- The name, address, or contact details of the certificate holder;
- Any address of a location where a certified product is produced or manufactured.

13.2 The certificate holder shall notify the Product Certification body in writing of any intended change, modification, or alteration to any of the following:

- The certified building method or product;
- The method of its production or manufacture;
- The Product Quality Plan prepared in respect of the certified building method or product;
- The application or installation instructions for the certified building method or product;
- Any documentation relating to the use and maintenance of the certified building method or product.

JAS-ANZ

www.jas-anz.org/register

The Certificate Holder must maintain compliance with the conditions set out in Regulation 15 of the Building (Product Certification) Regulations 2008.

This Certificate is issued by BRANZ Limited, an independent certification body accredited by the product certification body appointed by the Chief Executive of the Ministry of Business, Innovation and Employment (MBIE) under the Building Act 2004. MBIE does not in any way warrant, guarantee or represent that the building method or product the subject of this certificate conforms with the New Zealand Building Code, nor accept any liability arising out of the use of the building method or product. MBIE disclaims, to the extent permitted by law, all liability (including negligence) for claims of losses, expenses, damages and costs arising as a result of the use of the building method(s) or products(s) referred to in this certificate.

It is advised to check that this Product Certificate is currently valid and not withdrawn, suspended or superseded by a later issue, by referring to the MBIE website, www.mbie.govt.nz

This certificate may only be reproduced in its entirety.

Information regarding BRANZ's complaints process can be found at the following link: Complaints Process

CODEMARK®

Certificate No: BRANZ-CM-1002-Rev 1

Date of Issue: 02 March 2021

Recertification Date: 11 January 2022

CERTIFICATE HOLDER

Thermakraft

Thermakraft Limited
11 Turia Place
East Tamaki
Auckland, 2013
New Zealand

Tel: 0800 806 595
Email: info@thermakraft.co.nz
Web: www.thermakraft.co.nz

Client signature

William Lin

Customer Name William Lin
Customer Position Head of Engineering and Inventory
Thermakraft Limited

CERTIFICATION BODY

BRANZ

BRANZ Limited
1222 Moonshine Rd,
RD1, Porirua 5381
Private Bag 50 908
Porirua 5240,
New Zealand

Tel: 04 237 1170
Email: assuranceservices@branz.co.nz
Web: branz.nz

Chelydra Percy

Chelydra Percy
Chief Executive Officer
BRANZ Limited

RDD - Approved Building Consent [Acquired] - BCA1002_SC_DBLID_P9 - 29/09/2021 - Hugh Yeoh

13.3 If the certificate holder has any reason to suspect that the certified building method or product does not comply with the Building Code, the certificate holder shall notify the product certification body in writing of the reason for that suspicion.

13.4 If the certificate holder or the product certification body finds that a certified building method or product that has been released on the market does not comply with the Building Code, the certificate holder shall disclose that fact in a published disclosure statement in a form that is acceptable to the product certification body and to MBIE.

13.5 If the certificate is suspended or revoked, the certificate holder—

- Shall notify all customers to whom the building method or product is regularly supplied; and
- Immediately cease using the certificate, the mark of conformity, and any reference to the number of this certificate.

JAS-ANZ

www.jas-anz.org/register

The Certificate Holder must maintain compliance with the conditions set out in Regulation 15 of the Building (Product Certification) Regulations 2008.

This Certificate is issued by BRANZ Limited, an independent certification body accredited by the product certification body appointed by the Chief Executive of the Ministry of Business, Innovation and Employment (MBIE) under the Building Act 2004. MBIE does not in any way warrant, guarantee or represent that the building method or product the subject of this certificate conforms with the New Zealand Building Code, nor accept any liability arising out of the use of the building method or product. MBIE disclaims, to the extent permitted by law, all liability (including negligence) for claims of losses, expenses, damages and costs arising as a result of the use of the building method(s) or products(s) referred to in this certificate.

It is advised to check that this Product Certificate is currently valid and not withdrawn, suspended or superseded by a later issue, by referring to the MBIE website, www.mbie.govt.nz

This certificate may only be reproduced in its entirety.

Information regarding BRANZ's complaints process can be found at the following link: Complaints Process

Thermakraft™

KDC - Approved Building Consent Document - BC210608_SD_ISSUED - Pg 10 of 125 - 29/09/2021 - vsingh



Thermakraft
ONE WRAP SYSTEM
10 Products - One system
One warranty

Installation Guide

WATERGATE PLUS

New Zealand's premium all-purpose, fire retardant wall wrap.

Watergate Plus is specifically designed as a wall underlay for use behind exterior wall cladding. Made from synthetic materials Watergate Plus is fire retardant, water resistant and vapour permeable. The water vapour transfer rate of the product has been optimised to minimise condensation risk in homes without compromising its primary water barrier properties.

Watergate Plus is part of the Thermakraft One Wrap System. Its unique construction allows for easier installation while maintaining best in class performance qualities.

Smarter products. Better buildings.
thermakraft.co.nz

CodeMark BRANZ-CM-1002

BRANZ Appraised
Appraisal No.695 [2017]

KDC - Approved Building Consent Document - BC210608_SD_ISSUED - Pg 11 of 125 - 29/09/2021 - vsingh

Installation Guide

Application Method

- Fix Watergate Plus underlay with printed side facing the exterior and run horizontally.
- Fix to all exterior walls from below bearers to the top plate. Watergate Plus underlay is available in widths of 2740mm and 1370mm. The 2740mm width product is generally wide enough to cover from below the bottom plate to the top plate.
- **Timber Framing:** Pull the Watergate Plus underlay tight and fix securely to the frame with fasteners such as galvanized Little Grippers, 6mm-8mm staples or 20mm large head galvanized clouts at 300mm centres horizontally and vertically.
- **Steel Framing:** Ensure frame is free from oil, dust and dirt. Fix securely using construction grade double-sided tape or adhesive or galvanized flat head screws that are appropriate for external framing and roofing use, at 300mm centres.

  Note: Check adhesive compatibility with Watergate Plus and the steel framing materials before use.

  If using a tape: Apply double-sided tape onto steel frame studs and only peel off the forward-facing liner once Watergate Plus is ready to be installed. When ready, peel off approximately 2m of tape liner at a time and press Watergate Plus firmly onto tape, ensuring it is taut.

  Note: The double-sided tape is to temporarily hold the Watergate Plus in place until the batten and/or cladding is installed. The screws used to fix these are the permanent fixings for Watergate Plus.
- Minimum of 150mm lap is required at joins. All vertical laps must be made over studs. Horizontal laps to be laid ship lap style allowing water to be shed to the outer face of Watergate Plus.
- Cover all windows and door openings with Watergate Plus underlay. It is recommended that the Watergate Plus underlay is not cut and prepared for window installation until the arrival of the windows.
- When windows and doors are ready for installation, the Watergate Plus underlay covering the openings should be cut at 45° and folded into the opening and securely fastened. Thermakraft window flashing tapes are recommended as the window flashing system.

  Note: In accordance with NZBC Acceptable Solution E2/AS1 and NASH Building Envelope Solutions: 2019 (E2/AS4), wall underlay must be prevented from bulging into the drained cavity. Where stud spacing is greater than 450mm, Thermakraft stud strap or Thermastrap run horizontally at 300 centres is an acceptable means of prevention.
- Once installed, Watergate Plus must not be left exposed to the weather or UV for a maximum of 90 days. Watergate Plus underlays will provide temporary weather protection during construction allowing work to continue. Internal linings and insulation must not be installed until the exterior cladding is completed.
- Fastenings behind Brick Veneer Cladding must have an equivalent service life to that of Brick Veneer (50 years). Refer to NZBC B2 Durability.
- Repair small damaged areas with any Thermakraft window flashing tape or Thermakraft Premium Joining Tape. Any large areas which require repair may be covered with a second layer of underlay with a lap of 150mm and then taping.
- Watergate Plus underlay must be installed by, or under the guidance of a licensed building practitioner.



Fix Watergate Plus securely to the frame.



On arrival of doors and windows, cut Watergate at each opening on a 45° angle away from each corner. Pull the Watergate flaps inside and fasten to the inside of frame.

Application Tips

Watergate Plus is unaffected by LOSP or other solvent based treated timber. However, LOSP or other solvent based treated timber must have sufficient time for the solvent to flash off in a well-ventilated area. Recommended minimum 7 days.

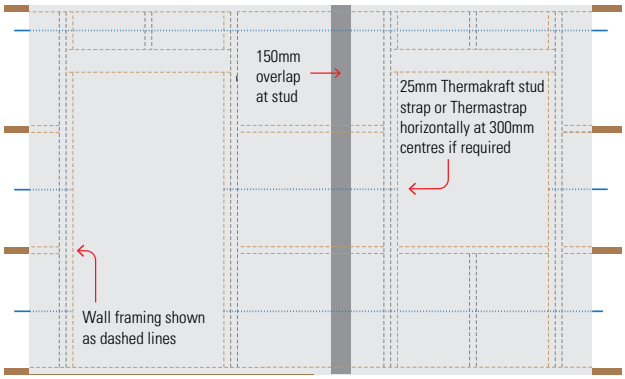

Handling and Storage

Watergate Plus underlay must be handled with care to prevent damage such as tearing and roll deformation. Due to the width of the product, care should be taken when installing in windy conditions.

The product must be stored under cover well away from direct moisture, rainfall contact and sunlight (UV). Care should be taken not stack other materials on top of the product.

The recommendations contained in Thermakraft's literature are based on good building practice, but are not an exhaustive statement of all relevant information and are subject to any conditions contained in the Warranty. All product dimensions and performance claims are subject to any variation caused by normal manufacturing process and tolerances. Furthermore, as the successful performance of the relevant system depends on numerous factors outside the control of Thermakraft (for example quality of workmanship and design), Thermakraft shall not be liable for the recommendations in that literature and the performance of the Product, including its suitability for any purpose or ability to satisfy the relevant provisions of the Building Code, regulations and standards. Literature subject to change without notification. Latest documentation can be found on the website. E&OE.

Issue 4, September 2021

KDC - Approved Building Consent Document - BC210608_SD_ISSUED - Pg 12 of 125 - 29/09/2021 - vsingh

BRANZ Appraised
Appraisal No. 878 [2019]

THERMAKRAFT ALUBAND WINDOW FLASHING TAPE

Appraisal No. 878 (2019)

This Appraisal replaces BRANZ Appraisal No. 878 (2014)

Amended 26 March 2021



BRANZ Appraisals

Technical Assessments of products for building and construction.

Thermakraft Limited
PO Box 58 112
Greenmount
Auckland
Tel: 09 273 3727
Fax: 09 273 3726
Free phone: 0800 806 595
www.thermakraft.co.nz

BRANZ
1222 Moonshine Rd,
RD 1, Porirua 5381
Private Bag 50 908
Porirua 5240,
New Zealand
Tel: 04 237 1170
branz.co.nz

Product

1.1 Thermakraft Aluband Window Flashing Tape in conjunction with the Thermakraft Corner Moulded Piece is a flexible flashing tape system for use around framed joinery openings as a secondary weather resistant barrier.

1.2 The system is installed into and around the framed joinery opening over the wall underlay and exposed frame to cover both the face and edge of the opening framing. Thermakraft Aluband Window Flashing Tape is also used at joinery heads to seal flashing upstands to the wall underlay.

Scope

Timber Framing

2.1 The Thermakraft Aluband Window Flashing Tape has been appraised for use as a flexible flashing tape with external wall cladding for timber-framed buildings within the following scope:

- the scope limitations of NZBC Acceptable Solution E2/AS1, Paragraph 1.1 for timber-framed buildings; and
- with a risk score of 0-20, calculated in accordance with NZBC Acceptable Solution E2/AS1, Table 2; and,
- situated in NZS 3604 Wind Zones up to, and including, Extra High.

Steel Framing

2.2 The Thermakraft Aluband Window Flashing Tape has also been appraised for use as a flexible flashing tape with external wall cladding for steel-framed buildings within the following scope:

- the scope limitations of NASH Building Envelope Solutions Paragraph 1.1 for steel-framed buildings; and,
- with a risk score of 0-20, calculated in accordance with NASH Building Envelope Solutions; and,
- situated in NASH Standard Part 2 Wind Zones up to, and including, Extra High.

Specific Design

2.3 The Thermakraft Aluband Window Flashing Tape has also been appraised for weathertightness when used on buildings subject to specific design up to an ultimate limit state (ULS) wind pressure of 2.5 kPa with wall cladding systems complying with NZBC Acceptable Solution E2/AS1 or a valid BRANZ Appraisal that specifies a flexible flashing system; and, with flexible wall underlays compatible with the flashing tape and complying with the NZBC; and, situated in NZS 3604 Wind Zones up to, and including, Extra High (refer to Paragraph 7.3).

Readers are advised to check the validity of this Appraisal by referring to the Valid Appraisals listing on the BRANZ website, or by contacting BRANZ.

KDC - Approved Building Consent Document - BC210608_SD_ISSUED - Pg 13 of 125 - 29/09/2021 - vsingh

Building Regulations

New Zealand Building Code (NZBC)

3.1 **In the opinion of BRANZ, Thermakraft Aluband Window Flashing Tape, if designed, used, installed and maintained in accordance with the statements and conditions of this Appraisal, will meet or contribute to meeting the following provisions of the NZBC:**

Clause B2 DURABILITY: Performance B2.3.1 (b) 15 years and B2.3.2. Thermakraft Aluband Window Flashing Tape meets these requirements. See Paragraphs 8.1 and 8.2.

Clause E2 EXTERNAL MOISTURE: Performance E2.3.2. Thermakraft Aluband Window Flashing Tape contributes to meeting this requirement. See Paragraphs 7.1-7.4 and 11.1.

Clause F2 HAZARDOUS BUILDING MATERIALS: Performance F2.3.1. Thermakraft Aluband Window Flashing Tape meets this requirement.

Technical Specification

4.1 System components and accessories supplied by Thermakraft Limited are:

- **Thermakraft Aluband Window Flashing Tape** is a polymeric faced, bituminous modified, self-adhesive tape with a release backing paper. The tape is supplied in rolls 200, 150 and 75 mm wide x 25 m long and 150 mm wide x 10 m long. The rolls are wrapped in clear polythene film.
- **The Thermakraft Corner Moulded Piece** is made from inert polyethylene and is coloured orange. It is used in conjunction with the Thermakraft Aluband Window Flashing Tape and building underlays as part of the Thermakraft Aluband Window Flashing Tape system.
- **The Thermakraft Tool** is used to ensure proper adhesion of the Thermakraft Aluband Window Flashing Tape and to achieve a tight fit into corners.

4.2 Accessories used with the system which are supplied by the installer are:

- **Thermakraft Corner Moulded Piece Fixings** - staples, clouts or other temporary fixings to attach the corner mould to the framing prior to the installation of the Thermakraft Aluband Window Flashing Tape.
- **Scotch® Super 77™ Multipurpose Adhesive** - a clear spray primer.

Handling and Storage

5.1 Handling and storage of all materials supplied by Thermakraft Limited, whether on-site or off-site, is under the control of the installer. Thermakraft Aluband Window Flashing Tape and accessories must be protected from damage and weather. Rolls must be stored under cover, in clean, dry conditions away from direct exposure to sunlight.

Technical Literature

6.1 Refer to the Appraisals listing on the BRANZ website for details of the current Technical Literature for Thermakraft Aluband Window Flashing Tape. The Technical Literature must be read in conjunction with this Appraisal. All aspects of design, use, installation and maintenance contained in the Technical Literature and within the scope of this Appraisal must be followed.

Design Information

General

7.1 Thermakraft Aluband Window Flashing Tape meets the requirements of AC 148: 2001 which is an alternative solution to the version of AC 148 referenced by NZBC Acceptable Solution E2/AS1 Paragraph 9.1.5 b) and NASH Building Envelope Solutions Paragraph 9.1.5 b). The installation method for Thermakraft Aluband Window Flashing Tape is an alternative solution to the installation method shown within NZBC Acceptable Solution E2/AS1, Figures 72A and 72B and NASH Building Envelope Solutions, Figures 72A and 72B.

Readers are advised to check the validity of this Appraisal by referring to the Valid Appraisals listing on the BRANZ website, or by contacting BRANZ.

KDC - Approved Building Consent Document - BC210608_SD_ISSUED - Pg 14 of 125 - 29/09/2021 - vsingh

7.2 The use of flexible flashing systems around window and door joinery openings is critical to assist the overall weathertightness performance of window and door joinery installations.

7.3 Thermakraft Aluband Window Flashing Tape is suitable for use over flexible wall underlays compatible with the flashing tape in NZS 3604 Wind Zones up to, and including, Extra High. In the Extra High Wind Zone, the flexible underlay must be installed over a rigid underlay complying with NZBC Acceptable Solution E2/AS1, Table 23 or NASH Building Envelope Solutions, Table 23.

7.4 Thermakraft Aluband Window Flashing Tape is designed to prevent air leakage and water penetration around window and door openings at framing junctions (e.g. at the sill trimmer and opening stud junction), and to keep any water that gets past the cladding, or through the joinery, from direct contact with the framing timber.

7.5 Thermakraft Aluband Window Flashing Tape is not designed to overcome poor detailing and workmanship of the window or door joinery installation. The system must not be considered in isolation, but be considered as part of the wall cladding system. Thermakraft Aluband Window Flashing Tape is designed to be used in conjunction with air seals and joinery flashing systems, not as a substitute.

7.6 When Thermakraft Aluband Window Flashing Tape is used in conjunction with LOSP (light organic solvent preservative) treated timber, the solvent from the timber treatment must be allowed to evaporate (generally at least one week) prior to the installation of the system.

Durability

8.1 Assessment of durability to meet the NZBC is based on difficulty of access and replacement, and the ability to detect failure of Thermakraft Aluband Window Flashing Tape both during normal use and maintenance of the building.

Serviceable Life

8.2 Provided it is not exposed to the weather or ultraviolet (UV) light for a total of more than 42 days, and provided the exterior cladding is maintained in accordance with the cladding manufacturer's instructions and the cladding remains weather resistant, Thermakraft Aluband Window Flashing Tape is expected to have a serviceable life equal to that of the cladding.

Maintenance

9.1 No maintenance is required for Thermakraft Aluband Window Flashing Tape. Regular checks, at least annually, must be made of the junctions between the joinery and wall cladding to ensure that they are maintained weathertight and that the primary means of weather resistance for the junction e.g. flashing, sealant, etc. continues to perform its function, to ensure that water will not penetrate the cladding.

Prevention of Fire Occurring

10.1 Separation or protection must be provided to Thermakraft Aluband Window Flashing Tape from heat sources such as fireplaces, heating appliances and chimneys. Part 7 of NZBC Verification Method C/VM1 and Acceptable Solution C/AS1, and Acceptable Solution C/AS2 provide methods for separation and protection of combustible materials from heat sources.

External Moisture

11.1 Where a cladding manufacturer specifies the use of generic flashing tapes around window and door joinery openings at framing junctions as part of their system, or they specify the use of flexible flashing tapes that comply with NZBC E2/AS1, Paragraph 9.1.5 b) or NASH Building Envelope Solutions Paragraph 9.1.5 b), Thermakraft Aluband Window Flashing Tape may be used.

Readers are advised to check the validity of this Appraisal by referring to the Valid Appraisals listing on the BRANZ website, or by contacting BRANZ.

KDC - Approved Building Consent Document - BC210608_SD_ISSUED - Pg 15 of 125 - 29/09/2021 - vsingh

Installation Information

Installation Skill Level Requirements

12.1 All design and building work must be carried out in accordance with the Thermakraft Aluband Window Flashing Tape Technical Literature and this Appraisal by competent and experienced tradespersons conversant with flashing tapes. Where the work involves Restricted Building Work (RBW) this must be completed by, or under the supervision of, a Licensed Building Practitioner (LBP) with the relevant License class.

General

13.1 The selected wall underlay must be installed in accordance with the manufacturer's instructions, and must completely cover the joinery opening. The underlay is then cut on a 45° angle away from each corner of the opening so the flaps can be folded into the opening and secured to the interior face of the timber framing.

13.2 Fit a Thermakraft Corner Moulded Piece into each of the bottom corners to create a seal at the corner junction. The corner piece must be fixed to the framing with staples or clouts.

13.3 Before the Thermakraft Aluband Window Flashing Tape is applied, the substrate surfaces must be clean, dry and free from any surface contaminants such as dust and grease that may cause loss of adhesion. When installing Thermakraft Aluband Window Flashing Tape on difficult to bond substrates, Scotch® Super 77™ Multipurpose Adhesive may be used. Ensure that the wall underlay/substrate is dry and free of dirt before applying the spray adhesive. Apply a light spray/coating of the spray adhesive onto the underlay/substrate. Wait for a minute to allow the spray adhesive to become tacky. When tacky to the touch, apply the flashing tape in the normal manner.

13.4 A length of Thermakraft Aluband Window Flashing Tape must be cut to the length of the sill plus 400 mm. The tape is installed flush with the interior face of the opening and is applied along the entire length of the sill and 200 mm up each jamb. The overhanging tape is cut at the corner of the opening to allow the tape to be folded onto the face of the building underlay. The Thermakraft Tool must be used to ensure that adequate adhesion of the tape is achieved and that the tape is installed tight into the sill/jamb junction.

13.5 A 400 mm length of Thermakraft Aluband Window Flashing Tape must be installed 200 mm down the jamb and 200 mm along the lintel at each of the top corners of the window or door joinery opening. A 75 mm wide x 100 mm long sealing tape 'butterfly' must be installed at 45° across the corner of the head/jamb junction overlapping the corner by 3 mm to create a seal at the corner junction.

13.6 Thermakraft Aluband Window Flashing Tape must not be stretched. To avoid wastage, the tape can be lapped 100 mm minimum onto itself without reducing the performance of the Thermakraft Aluband Window Flashing Tape system.

13.7 If the Thermakraft Aluband Window Flashing Tape is exposed to the weather or UV light for more than 42 days, then it must be replaced with new material.

Installation Temperature

13.8 Thermakraft Aluband Window Flashing Tape must not be installed at temperatures of less than 5°C.

Inspections

13.9 The Technical Literature must be referred to during the inspection of Thermakraft Aluband Window Flashing Tape installations.

Readers are advised to check the validity of this Appraisal by referring to the Valid Appraisals listing on the BRANZ website, or by contacting BRANZ.

KDC - Approved Building Consent Document - BC210608_SD_ISSUED - Pg 16 of 125 - 29/09/2021 - vsingh

Basis of Appraisal

The following is a summary of the technical investigations carried out:

Tests

14.1 Testing of Thermakraft Aluband Window Flashing Tape has been completed by BRANZ to the requirements of ICC Evaluation Service Acceptance Criteria for Flashing Materials AC 148: 2001. The adhesion of Thermakraft Aluband Window Flashing Tape to black bituminous Kraft building paper complying with the requirements of NZBC Acceptable Solution E2/AS1, Table 23 or NASH Building Envelope Solutions Table 23 and selected other synthetic wall underlays has been tested and found to be satisfactory.

Other Investigations

15.1 An assessment was made of the durability of Thermakraft Aluband Window Flashing Tape by BRANZ technical experts.

15.2 Site inspections were carried out by BRANZ to examine the practicability of installation.

15.3 The Technical Literature has been reviewed by BRANZ and found to be satisfactory.

Quality

16.1 The manufacture of Thermakraft Aluband Window Flashing Tape has not been examined by BRANZ, but details of the quality and composition of the materials used were obtained and found to be satisfactory.

16.2 The quality of supply to the market is the responsibility of Thermakraft Limited.

16.3 Designers are responsible for the building design, and building contractors are responsible for the quality of installation of framing systems and wall underlays in accordance with the instructions of the designer.

16.4 The quality of installation, handling and storage on site is the responsibility of the installer in accordance with the instructions of Thermakraft Limited.

Sources of Information

- ICC Evaluation Service, Inc, AC148 Acceptable Criteria for Flexible Flashing Materials, July 2001.
- NZS 3604: 2011 Timber-framed buildings.
- NASH Building Envelope Solutions: 2019 Light steel framed buildings.
- NASH Standard Part Two: 2019 Light steel framed buildings.
- Ministry of Business, Innovation and Employment Record of amendments - Acceptable Solutions, Verification Methods and handbooks.
- The Building Regulations 1992.

Amendments

Amendment No 1, dated 26 March 2021

This Appraisal has been amended to include NASH Standards and update the technical specifications.

Readers are advised to check the validity of this Appraisal by referring to the Valid Appraisals listing on the BRANZ website, or by contacting BRANZ.

KDC - Approved Building Consent Document - BC210608_SD_ISSUED - Pg 17 of 125 - 29/09/2021 - vsingh

In the opinion of BRANZ, Thermakraft Aluband Window Flashing Tape is fit for purpose and will comply with the Building Code to the extent specified in this Appraisal provided it is used, designed, installed and maintained as set out in this Appraisal.

The Appraisal is issued only to Thermakraft Limited, and is valid until further notice, subject to the Conditions of Appraisal.

Conditions of Appraisal

1. This Appraisal:
   a) relates only to the product as described herein;
   b) must be read, considered and used in full together with the Technical Literature;
   c) does not address any Legislation, Regulations, Codes or Standards, not specifically named herein;
   d) is copyright of BRANZ.
2. Thermakraft Limited:
   a) continues to have the product reviewed by BRANZ;
   b) shall notify BRANZ of any changes in product specification or quality assurance measures prior to the product being marketed;
   c) abides by the BRANZ Appraisals Services Terms and Conditions;
   d) warrants that the product and the manufacturing process for the product are maintained at or above the standards, levels and quality assessed and found satisfactory by BRANZ pursuant to BRANZ's Appraisal of the product.
3. BRANZ makes no representation or warranty as to:
   a) the nature of individual examples of, batches of, or individual installations of the product, including methods and workmanship;
   b) the presence or absence of any patent or similar rights subsisting in the product or any other product;
   c) any guarantee or warranty offered by Thermakraft Limited.
4. Any reference in this Appraisal to any other publication shall be read as a reference to the version of the publication specified in this Appraisal.
5. BRANZ provides no certification, guarantee, indemnity or warranty, to Thermakraft Limited or any third party.

For BRANZ

Chelydra Percy
Chief Executive
Date of Issue:
18 December 2019

Readers are advised to check the validity of this Appraisal by referring to the Valid Appraisals listing on the BRANZ website, or by contacting BRANZ.

Thermakraft™



Thermakraft
ONE WRAP SYSTEM
10 Products - One system
One warranty

KDC - Approved Building Consent Document - BC210608_SD_ISSUED - Pg 18 of 125 - 29/09/2021 - vsingh

Installation Guide

ALUBAND

Bituminous adhesive flexible window flashing tape.

Aluband is designed specifically as a premium window flashing tape and forms part of the Thermakraft One Wrap System. Made with a heavy bituminous adhesive, the product provides high strength bond and excellent abrasion resistance.

Product usage

Aluband Window Flashing Tape is installed into and around frame joinery opening over the wall underlay and exposed frame to cover both the face and edge of the opening framing as a secondary weather resistant barrier. It can also be installed at joinery heads to seal flashing upstands to the wall underlay.

Smarter products. Better buildings.
thermakraft.co.nz

BRANZ Appraised
Appraisal No.878 [2019]

Installation Guide

KDC - Approved Building Consent Document - BC210608_SD_ISSUED - Pg 19 of 125 - 29/09/2021 - vsingh

Application Method

- Cut the wall underlay/air barrier at a 45° angle away from each corner. Fold flaps tightly into the window or door opening and fix with staples on the back faces of the framing.
- Fix the Thermakraft Corner Moulded Piece to the bottom corners by way of staples or clouts to the two jambs. Always ensure that Aluband is applied to surfaces that are clean and free of dust, contaminates, solvents, oils or waxes. Note the following: 150mm wide tape is used for 100mm wide window or door framing, and the 200mm wide tape is used for 140mm to 150mm wide reveals. (With steel framed houses use Double Sided Tape to attach the Thermakraft Aluband Corner Moulded Piece to metal framing).
- Measure 200mm up both jambs, add 400mm to the length of the window sill and cut to suit that measurement.
- First remove the release film from the tape; align the back edge of the tape with the inside edge of the sill.
- Using the Thermakraft Tool, firmly press the tape onto the wall underlay to ensure good adhesion and ensure the tape is fitted tightly into the jamb to sill corners.
- At the sill/jamb corners cut the tape from the external edge of the frame outwards. Fold flaps back onto the wall underlay/air barrier and press tape firmly for good adhesion.
- Proceed to fit the Window Flashing Tape to the top corners of the frame (200mm across lintel x 200mm down jamb).
- For window or door lintel to jamb junction, apply a butterfly using the 75mm wide x 100mm long Aluband. Fix at a 45° angle to the jamb with an overlap at the corner of 3mm.
- Door frames are to be treated similarly to window openings. The sill may be either a timber or a concrete floor.
- Window Flashing Tape is used to seal the up stand of the window head flashing to the building underlay. (Refer to the cladding manufacturer's details).
- Aluband must NOT be left exposed to the weather or UV for more than 42 days.

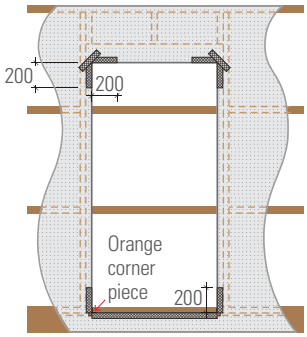

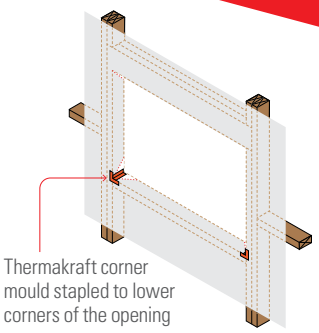

Window and door frames

- Staple orange corner piece to the bottom corner sill. Place tape 200mm up the jambs and across the full width of the sill opening. Align tape with the back of the frame opening.
- At the top corner place tape 200mm down the jamb and 200mm across the lintel. Place a strip of 75mm tape across the top corner.

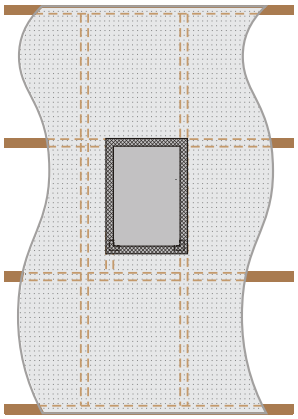

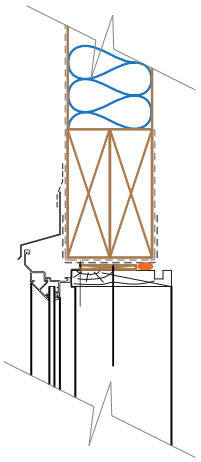

Application Tips

- Always use the Thermakraft Aluband Window Flashing Tool to apply firm pressure onto the tape during installation. This will ensure proper adhesion of the tape to the building underlay or other substrates.
- Install the Aluband Window Flashing above 5°C.
- Unaffected by LOSP or other solvent based treated timber. However, LOSP or other solvent based treated timber must have sufficient time for the solvent chemical to flash off in a well ventilated area. Recommended minimum 7 days.

Important Information

To assist the adhesion of Aluband window flashing tape, Thermakraft suggests the following two options this is particularly relevant in the following conditions:

- In temperatures below 5°C.
- When adhering to difficult to bond substrates such as rough/uneven surfaces.
- When the tape has been lifted or moved after initial application.

Installation Guide

Application of Heat:

- Press the window sill tape into position in the usual manner.
- Apply a gentle heat, using a heat gun on low heat to the top of the window sill tape.
- Once the adhesive starts to soften use the Thermakraft tool or a roller to firmly press the tape into the wall underlay ensuring good adhesion.
- Take care not to damage the foil face lining.

Difficult to Bond Substrates Surface Preparation:

- Always ensure that Aluband is applied to surfaces that are clean and free of dust, contaminates, solvents, oils or waxes.
- Application of Scotch® Super 77™ Spray Adhesive: When installing Aluband Flashing Tapes on difficult to bond substrates, Scotch® Super 77™ Spray Adhesive may be used. Ensure that the substrate is dry and free of dirt before applying the spray adhesive. Apply a light spray/coating of the spray adhesive onto the substrate. Wait for a minute to allow the spray adhesive to become tacky. When tacky to the touch apply the flashing tape in the normal manner.

Adhesives and Sealants:

- After the installation of Aluband window flashing tape, ensure that the edges do NOT come into contact with solvent based sealants or adhesives. Solvents in these products can adversely affect the adhesion or dissolve the bituminous adhesive and cause it to run.
- If the application of solvent based adhesives or sealants are necessary, cover the edges with Thermakraft joining tape or a true aluminium foil tape to form a barrier. With a true aluminium foil tape, the installer must test the bonding strength.
- The installer must check the compatibility of the Aluband window flashing tape with the sealant or adhesive product to ensure the components are fully compatible.

Handling and Storage

Aluband window flashing tape must be handled with care to prevent damage such as tearing, excessive puncture and roll deformation.

The product must be stored under cover well away from direct moisture, rainfall contact and sunlight (UV). Care should be taken not stack other materials on top of the product.

KDC - Approved Building Consent Document - BC210608_SD_ISSUED - Pg 20 of 125 - 29/09/2021 - vsingh

The recommendations contained in Thermakraft's literature are based on good building practice, but are not an exhaustive statement of all relevant information and are subject to any conditions contained in the Warranty. All product dimensions and performance claims are subject to any variation caused by normal manufacturing process and tolerances. Furthermore, as the successful performance of the relevant system depends on numerous factors outside the control of Thermakraft (for example quality of workmanship and design), Thermakraft shall not be liable for the recommendations in that literature and the performance of the Product, including its suitability for any purpose or ability to satisfy the relevant provisions of the Building Code, regulations and standards. Literature subject to change without notification. Latest documentation can be found on the website. E&OE.

Issue 4, January 2020

Thermakraft™



KDC - Approved Building Consent Document - BC210608_SD_ISSUED - Pg 21 of 125 - 29/09/2021 - vsingh

Product Data Sheet

THERMAKRAFT 215

Self-supporting bituminous wall and roof underlay

Commonly referred to as "Building Paper" Thermakraft 215 is a self-supporting, kraft paper based, bituminous building underlay that is suitable for use on roofs and walls in residential buildings. It is vapour permeable, meaning that liquid water from the outside is prevented from penetrating but water vapour from the inside can pass through and escape the building envelope. Thermakraft 215 is easy to install.

Thermakraft 215 comes in two roll sizes:

1250mm wide	20m long	25m^2 coverage*
1250mm wide	40m long	50m^2 coverage*

* **Note:** m2 is the roll size for actual coverage, allow for laps and joins.

Smarter products. Better buildings.
thermakraft.co.nz

Thermakraft 215

Self-supporting bituminous wall and roof underlay

KDC - Approved Building Consent Document - BC210608_SD_ISSUED - Pg 22 of 125 - 29/09/2021 - vsingh

Scope of Use (Roof Application)

- Suitable with masonry tile, metal tile and profiled metal roof cladding.
- Direct fix or cavity fix.
- Can be used on roofs up to and including NZS 3604 'Extra High' wind zones.
- Refer to installation guide regarding underlay support requirements.
- Will provide temporary weather protection during construction (maximum 7 days), same day coverage recommended.

Scope of Use (Wall Application)

- Suitable for use with both timber and steel framing, either direct fix or in conjunction with an 18mm minimum drained cavity.
- Can be used with absorbent wall claddings (e.g. timber, brick or fibre cement) or non-absorbent wall claddings (e.g. metal or plastic).
- Can be used with masonry veneer in accordance with NZS 3604.
- Suitable for buildings situated in NZS3604 Building Wind Zones up to and including 'Very High'.
- Thermakraft 215 can be used as an air barrier to reduce wind entry and is highly water resistant.
- Will provide temporary weather protection during construction (maximum 28 days).

General

Unaffected by LOSP or other solvent based treated timber. However, LOSP or other solvent based treated timber must have sufficient time for the solvent chemical to flash off in well ventilated area. Recommended minimum 7 days.

Limitations

- In roofing applications must NOT be exposed to the weather or UV for more than 7 days.
- In wall applications must NOT be exposed to the weather or UV for more than 28 days.
- Must NOT be used under translucent sheeting.
- Is not fire retardant.
- Not suitable for School Property, please refer to Ministry of Education; Weather-Tightness & Durability requirements for School Property.

Compliance

Thermakraft 215 meets the requirements of NZBC Acceptable Solutions E2/AS1, Table 23 and NZS 2295:2006 for both wall & roof underlay.

Durability

Meets the Performance Requirements of NZBC Clause B2, Durability B2.3.1 (a) 50 years and B2.3.1 (b) 15 years, E2 External Moisture providing:

- It is installed in accordance to Thermakraft Installation Guide.
- Run length is no greater than 10 meters.
- Is NOT left exposed to the weather or UV for more than 7 days on roof.
- Is NOT left exposed to the weather or UV for more than 28 days on walls.
- Is installed by or under guidance of Licensed Building Practitioners.
- Is installed in accordance with the MRM Code of Practice.
- Is compatible with the cladding system used.*

* **Note:** roof cladding system compatibility testing must be done first before installation.

Property Performance

NZBC E2/AS1 Wall Underlay Requirements

NZBC E2/AS1 Table 23 (NZS2295) Roof Underlay Properties	Absorbency	Vapour Resistance	pH of Extract	Shrinkage	Water Resistance
Property Performance Requirement	≥ 150gsm	≤ 7 MN.s/g	≥ 5.5 and ≤ 8	≤ 0.5%	100mm for 24 hrs
Property Performance	Pass	Pass	Pass	Pass	Pass

NZS2295:2006 Classification

NZBC E2/AS1 Table 23 (NZS2295) Roof Underlay Properties	Flammability Index	Wind Zone	NZS2295:2006 Index
Property Performance Requirement		R2	R2
Property Performance	Non-Fire Retardant	Up to Extra High	Self - Support

Thermakraft

Thermakraft 215

Self-supporting bituminous wall and roof underlay

KDC - Approved Building Consent Document - BC210608_SD_ISSUED - Pg 23 of 125 - 29/09/2021 - vsingh

Control of Condensation

In climatic regions where condensation risks are high, such as cold or high humidity areas, care needs to be taken in specifying the correct design and installation method to prevent moisture build-up in the roof cavities.

Factors which adversely affect the condensation risk in roofing systems include:

- Humid, and/or cold climatic regions.
- Warm/Skillion roof construction.
- Low roof cavity air volume and restricted air movement.
- Omitting Vapour Control Layers.
- Occupancy activities which have high moisture loading on conditioned spaces.
- Ceiling penetrations and entry of warm air into roof cavities.
- Low pitched roof.
- Bulk insulation.
- Building structures ability to naturally dry construction moisture.

Skillion and Warm Roof Construction are particularly sensitive to moisture accumulation and the design and installation of roof construction needs to take into account the higher condensation risks. Refer to MRM Code of Practice for details.

For passive ventilation of the roof space, it is recommended that all roof underlays are terminated at the ridge, and if not it should be slit or slotted to allow for passive ventilation. (For further information refer to the NZ MRM Roofing Code of Practice).

Product Warranty

Standard Thermakraft warranty applies. Refer to Thermakraft Warranty Statement for further details. This is available online at **thermakraft.co.nz** or call **0800 806 595.**

The recommendations contained in Thermakraft's literature are based on good building practice, but are not an exhaustive statement of all relevant information and are subject to any conditions contained in the Warranty. All product dimensions and performance claims are subject to any variation caused by normal manufacturing process and tolerances. Furthermore, as the successful performance of the relevant system depends on numerous factors outside the control of Thermakraft (for example quality of workmanship and design), Thermakraft shall not be liable for the recommendations in that literature and the performance of the Product, including its suitability for any purpose or ability to satisfy the relevant provisions of the Building Code, regulations and standards. Literature subject to change without notification. Latest documentation can be found on the website. E&OE.

Issue 6, November 2019

Thermakraft™

KDC - Approved Building Consent Document - BC210608_SD_ISSUED - Pg 24 of 125 - 29/09/2021 - vsingh

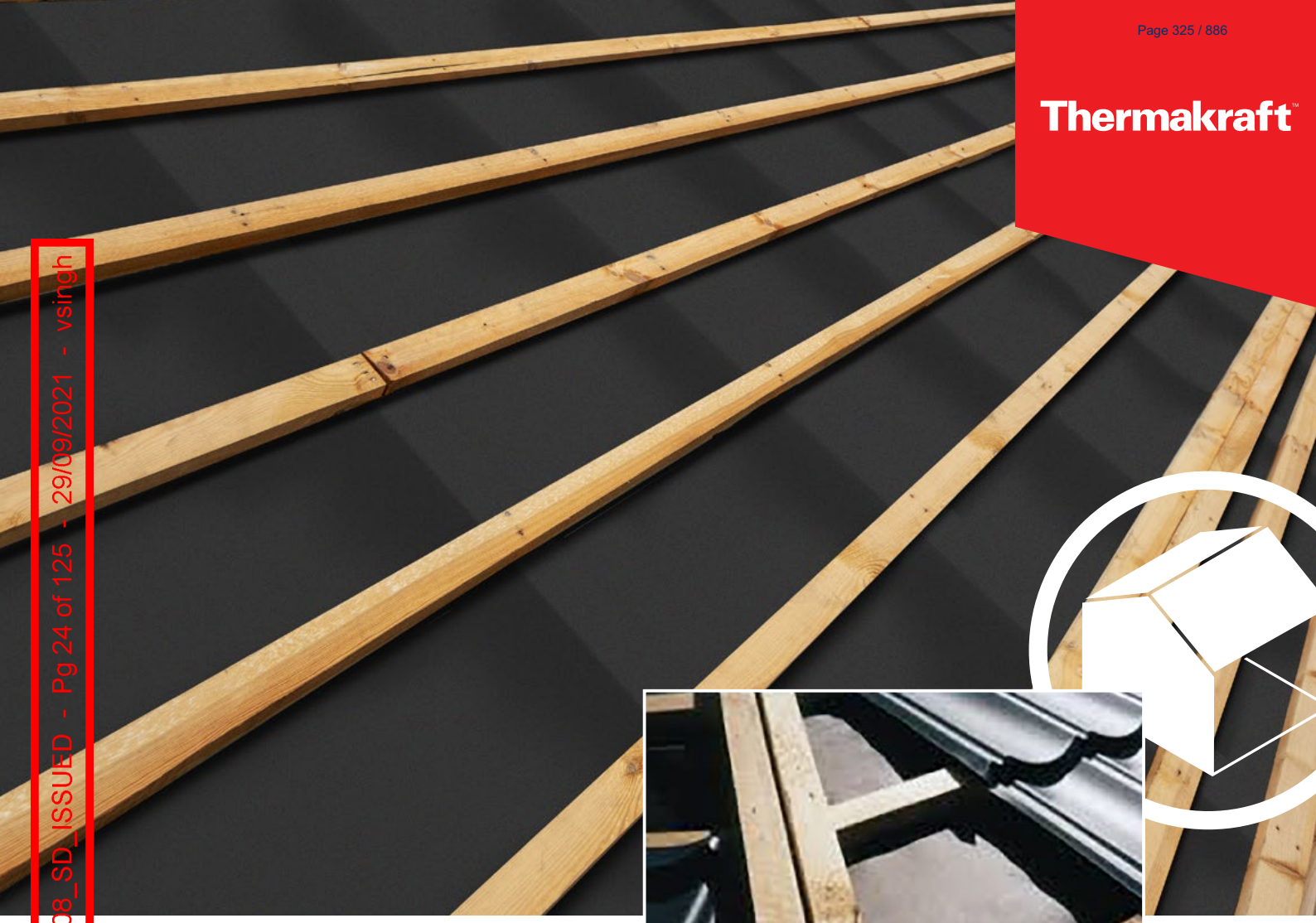

Installation Guide

THERMAKRAFT 215

Self-supporting bituminous wall and roof underlay

Commonly referred to as “Building Paper” Thermakraft 215 is a self-supporting, kraft paper based, bituminous building underlay that is suitable for use on roofs and walls in residential buildings. It is vapour permeable, meaning that liquid water from the outside is prevented from penetrating but water vapour from the inside can pass through and escape the building envelope. Thermakraft 215 is easy to install.

Smarter products. Better buildings.
thermakraft.co.nz

Installation Guide

KDC - Approved Building Consent Document - BC210608_SD_ISSUED - Pg 25 of 125 - 29/09/2021 - vsingh

Application Method (Roofing)

Thermakraft 215 is a bituminous building underlay used on roofs in residential buildings.

- Thermakraft 215 can be used in direct fix or cavity fix for roof construction.
- Run NO longer than 10m.

Long-run metal roofing/vertical or horizontal installation method

- Fix using stainless steel 8-12mm staples or 20mm flat head clouts, or appropriate proprietary fastenings on timber framed structure. Fixing at 300mm centres. Fixing types and requirements for steel framed structure can be found in the MRM Code of Practice.
- Refer to table below to determine underlay support requirements.

Roof Pitch	Span	Underlay Support Required	
		Horizontally Installed	Vertically Installed
≥ 10°	> 1200mm	Yes	Yes
	≤ 1200mm	No	No
< 10° (Min 3°)	> 1200mm	Yes	Yes
	≤ 1200mm	No	Yes

- Thermakraft 215 upper sheet lapped over lower sheets (shiplap) to ensure water is shed to the outer face.
  Note: Thermakraft 215 can move downwards. To prevent this, it must be "Captured" by the fastenings at each purlin. Horizontal fix must not be used on purlin distance greater than 1100mm to allow for 150mm laps.
- Must be laid firmly (tight/taut) without creases. All laps either vertical or horizontal must be a minimum of 150mm lap.
- When underlay support is required, Thermakraft recommend using AUSMESH Safety Mesh, AUSNET hexagonal netting or Thermastrap 201.
- Thermakraft 215 can be installed above the battens or purlins for profiled metal roof claddings and otherwise in accordance with NZBC E2/AS1.
- If required to achieve a lap seal (refer to NZ Metal Roofing Code of Practice), use Thermakraft Aluband window sealing tape or Thermakraft White General Purpose Tape.
- Thermakraft 215 will provide temporary weather protection during construction, same day coverage recommended. DO NOT over expose the product to the weather or UV for more than 7 days in any roof applications.
- Thermakraft 215 may be unwound to the full length from the gutter to the ridge. However, when ridge ventilation is required Thermakraft 215 may be terminated or slit at the ridge purlin to allow a free passage of air.
- Thermakraft 215 must NOT overhang the gutter line by more than 20 mm, or if eaves flashings are used, terminate on the upper side of the flashing. More details can be found in the MRM Code of Practice.
- Flue penetrations must have a minimum distance of 50mm from Thermakraft 215 (refer to NZ Metal Roof and Wall Cladding Code of Practice 10.11.5).
- Thermakraft 215 must be free of tears and punctures, fit tightly and be lap taped around all penetrations (except flue penetrations), to provide drainage for any condensation, or surface water from leaks.

Note: Do not use Aluband on penetrations where Polybutene water pipes have been installed. Refer Pipe Manufacturers for instructions on sealing penetrations.

Concrete/Metal tile roofing

- Thermakraft 215 must be laid over rafters prior to fixing the tile battens. The maximum span between rafters for Thermakraft 215 is 1200mm. Masonry tile roofs must have antiponding boards in accordance with NZBC E2/AS1 Paragraph 8.2.5.
- Installed Thermakraft may be laid over the top of the antiponding boards and draped into the gutter by no more than 20mm. Antiponding boards must be treated in accordance with NZS 3604.
- Do NOT Run Thermakraft 215 longer than 10m in length.

Application Method (Wall)

- Fix Thermakraft 215 underlay with printed side facing the exterior.
- Fix to all exterior walls from below bearers to the top plate. Pull the Thermakraft 215 underlay tight and fix securely to the frame with fasteners such as galvanized Little Grippers, 6mm-8mm staples or 20mm large head galvanized clouts at 300mm centres horizontally and vertically. Additional fasteners should be used around each opening to be cut out. Fixing types and requirements for steel framed structure can be found in the MRM Code of Practice.

Installation Guide

KDC - Approved Building Consent Document - BC210608_SD_ISSUED - Pg 26 of 125 - 29/09/2021 - vsingh

- When fixing Thermakraft 215 underlay to Steel framing the same procedures applies, use adhesive spray or tape or flat head screws to fasten to the framing or thermal break, the exterior cladding fastenings will act as the permanent fixings.
- Cover all windows and door openings with Thermakraft 215 underlay.
- It is recommended that the Thermakraft 215 underlay is not cut and prepared for window installation until the arrival of the windows. minimum of 150mm lap is required at joins, all vertical laps must be made over studs. Horizontal laps to be laid ship lap style allowing water to be shed to the outer face of the membrane.
- When windows and doors are ready for installation, the Thermakraft 215 underlay covering the openings should cut at 45° and folded into the opening and securely fastened. Thermakraft window flashing tapes are recommended as the window flashing system.
  Note: In accordance with NZBC Acceptable Solution E2/AS1, wall underlay must be prevented from bulging into the drained cavity. Where stud spacing is greater than 450mm Thermakraft stud strap run horizontal at 300 centres is an acceptable means of prevention.
- Once installed, Thermakraft 215 must not be left exposed to the weather or UV for a maximum of 28 days. Thermakraft 215 underlays will provide temporary weather protection during construction allowing work to continue. Internal linings and insulation must not be installed until the exterior cladding is completed.
- Fastenings behind Brick Veneer Cladding must have an equivalent service life to that of Brick Veneer (50 years). Refer to NZS 3604.
- Make good any forced tears with Thermakraft window flashing tapes. Any large areas which require repair may be covered with a second layer of underlay, a lap of 150mm is required.
- For wall cavity systems where stud spacings are greater than 450mm centres, another means of restraint is required on the flexible underlay to prevent insulation bulge (refer to E2/AS1).
- Thermakraft 215 underlay must be installed by a licensed building practitioner.

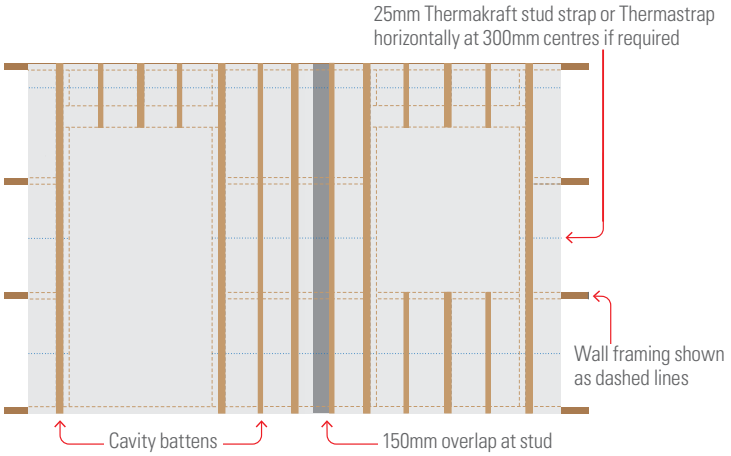

Application Tips

- Unaffected by LOSP or other solvent based treated timber. However, LOSP or other solvent based treated timber must have sufficient time for the solvent chemical to flash off in a well ventilated area. Recommended minimum 7 days.

Handling and Storage

Thermakraft 215 underlay must be handled with care to prevent damage such as tearing and roll deformation. Due to the width of the product, care should be taken when installing in windy conditions.

The product must be stored under cover well away from direct moisture, rainfall contact and sunlight (UV). Care should be taken not stack other materials on top of the product.

The recommendations contained in Thermakraft's literature are based on good building practice, but are not an exhaustive statement of all relevant information and are subject to any conditions contained in the Warranty. All product dimensions and performance claims are subject to any variation caused by normal manufacturing process and tolerances. Furthermore, as the successful performance of the relevant system depends on numerous factors outside the control of Thermakraft (for example quality of workmanship and design), Thermakraft shall not be liable for the recommendations in that literature and the performance of the Product, including its suitability for any purpose or ability to satisfy the relevant provisions of the Building Code, regulations and standards. Literature subject to change without notification. Latest documentation can be found on the website. E&OE.

Issue 1, November 2019

CORRUGATE





KDC - Approved Building Consent Document - BC210608_SD_ISSUED - Pg 27 of 125 - 29/09/2021 - vsingh

PROFILE TECHNICAL SUMMARY

(All dimensions are nominal and in mm.)

Corrugate lap



Corrugate 762 (Standard)
Dimensioned Drawing of Corrugate

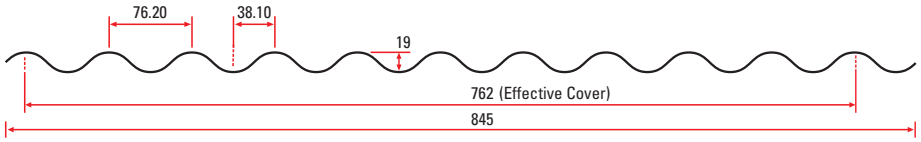

Corrugate 995
Dimensioned Drawing of Wide Corrugate

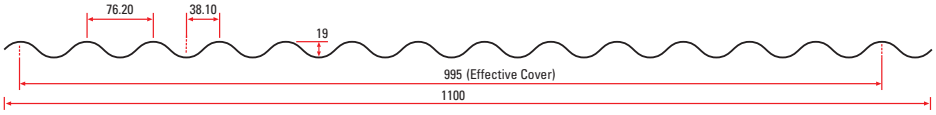

Minimum Pitch

The minimum roof pitch for Corrugate is 8 degrees (approx 1:7) and if end lapped 10 degrees (approx 1:6).

When a combination of sheets provide a run of in excess of 40 metres and up to 60 metres the roof pitch should be increased by 1 degree. Longer lengths require specific design.

When rainfall intensity exceeds 100mm/hour the minimum pitches need to be increased by a further 1 degree for every 10 metres of run over 40 metres

The building design pitch may need to be higher to take into account any cumulative deflections of the frame, purlin and roof sheeting or penetrations.

For curved roofing the roof cladding must **not** terminate at a pitch lower than permitted above.

Side laps of curved sheets must be sealed to any areas below the minimum pitches permitted above.

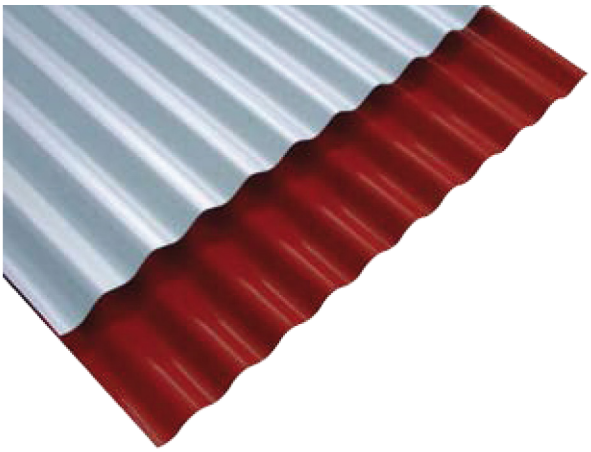

Branches: • Whangarei • Auckland • Pukekohe (Franklin Metal Folding & Roofing Ltd) • Hamilton • Taupo • Palmerston North • Wellington • Christchurch

- Manufactured custom cut to length subject to transport and site limitations.
- Sheet lengths in excess of 28 metres require specialised transportation.
- Maximum recommended sheet lengths for **Aluminium** is 10-12 metres for dark coloured and 12-15 metres for plain and light coloured. Refer to Roof Expansions Provisions of this summary.
- As sheet lengths increase higher transportation costs may be applicable.
- Sheet lengths for pre-curved material are subject to handling and transport limitations.

© ROOFING INDUSTRIES 2012 - RCR000

KDC - Approved Building Consent Document - BC210608_SD_ISSUED - Pg 28 of 125 - 29/09/2021 - vsingh

Information Table

Substrate Material	Steel		Aluminium	
Thickness	**.40mm BMT**	**.55mm BMT**	**.70mm BMT**	**.90mm BMT**
Aprox weight per lineal metre for substrate material (kg/lm)	3.2	4.27	1.84	2.37
Purlin Spacings -General	Refer to separate section.		Refer to separate section.	
Unsupported Overhang (mm)[1]	150	150	100	150
Drape Curved Roof -Minimum Radius (m)	12	10	12	10
Purlin Spacings for Curved Roofs -Intermediate (mm)	900	1200	800	1200
-End (mm)	600	800	550	800
Precurved Roof -Minimum Radius (mm)	N/R[2]	300	300	300
-Recommended Minimum Radius (mm)	N/R[2]	400	400	400

[1] Not suitable for roof access without additional support [2] N/R - Not recommended

This technical data sheet is for steel and aluminium based substrates. Corrugate can also be manufactured in other metals such as copper or titanium zinc. Refer to Roofing Industries.

Specification

Refer to our Full Specification on Masterspec, our website, and our Selection Guide.

Building Design / Performance Criteria / Product Selection

During the design of buildings, it is necessary for the designer to take into account a number of issues to ensure that the most appropriate roofing and cladding product is chosen.

Whilst aesthetics and product availability do play a part, the chosen profile must meet certain performance criteria. These are centred around the profile's ability to shed water from the roof and the ability of the product to span purlin and girt spacings and meet design criteria. The minimum pitch for this profile is outlined elsewhere within this literature.

In terms of purlin spans and girt spacing it is necessary to follow due process.

If a building is being designed and constructed in full accordance with E2/AS1 and roofing and cladding products as covered by that document are chosen, then it is necessary for the design spans and fixing methodology to comply with those of E2/AS1. However E2/AS1 states that the use of the manufacturers information may provide a more optimum spacing of fixings, and this is recommended by Roofing Industries.

Further where a building is outside of the scope of E2/AS1 and the building or parts thereof are of specific design then it is necessary for the roofing and cladding to be suitable for the design and vice versa.

Loadings referred to in Roofing Industries graphs are the result of testing to a serviceability limit state which is more conservative than an ultimate limit state as quoted by some manufacturers.

Our Design Graphs are presented in a form to allow the designer to select suitable products and purlin spacings.

For most roof installations the purlin spacings will be limited by the trafficable limitations of the profile or the structural design. It is then necessary for the designer to calculate the design wind load for the roofing and cladding in accordance with generally acceptable practice, by reference to AS/NZS 1170.2:2011 and/or NZS 3604:2011.

For a fuller explanation of this refer to the NZ Metal Roof and Wall Cladding Code of Practice. This result should be referenced to the Wind Load Span Design Graphs.

The purlin spacings should be limited to the lower of the trafficable limitations and design wind load with the capacity of the structure being greater than the design load for the application. However for roofs that are not able to be walked on and for wall cladding applications, the trafficable limitations may be exceeded providing the design wind loading criteria is met. However this should be done with caution as it may require considerable extra secondary fasteners within the laps.

The designer should always take into account in areas of heavy roof traffic, snow loadings, or where the roofing supports such items as air conditioning units, purlin spacing should be reduced accordingly. Consideration also needs to be given to limitations of purlin spacings for any translucent sheeting.

Reference should be made to the notes in the graphs.

It is our recommendation that for commercial and industrial roofing applications that .55mm BMT steel or .90mm BMT Aluminium is used as it has more resilience to damage particularly by other trades.

Underlay as per the project specifications should be used.

With an aluminium substrate steel netting should not be used where it may be in contact (either directly or through underlay degradation) with the aluminium roofing or cladding. Alternative material such as polypropylene strapping should be used where support is required, or the cladding separated from the underlay by a high density polystyrene batten or Thermakraft Drainage Matt or similar, and the use of an aluminium gutter flashing. This is also applicable to coated metal and zinc roofing in severe marine applications. As corrugated has a minimum pitch of 8°, self supporting paper (without the use of netting or other support) can generally be used, and in any case self supporting paper is recommended even when support is required, in the above situations.

KDC - Approved Building Consent Document - BC210608_SD_ISSUED - Pg 29 of 125 - 29/09/2021 - vsingh

WIND LOAD SPAN DESIGN GRAPH

Roofing - Steel Based Material

.40 Steel G550 High Strength

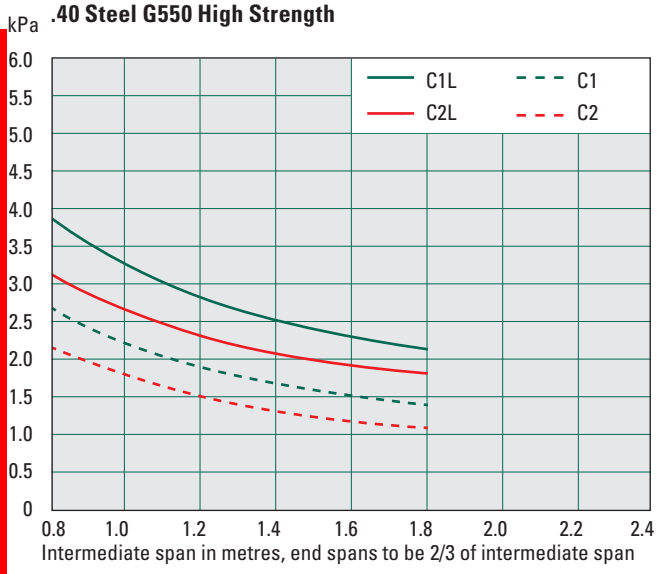

.55 Steel G550 High Strength.

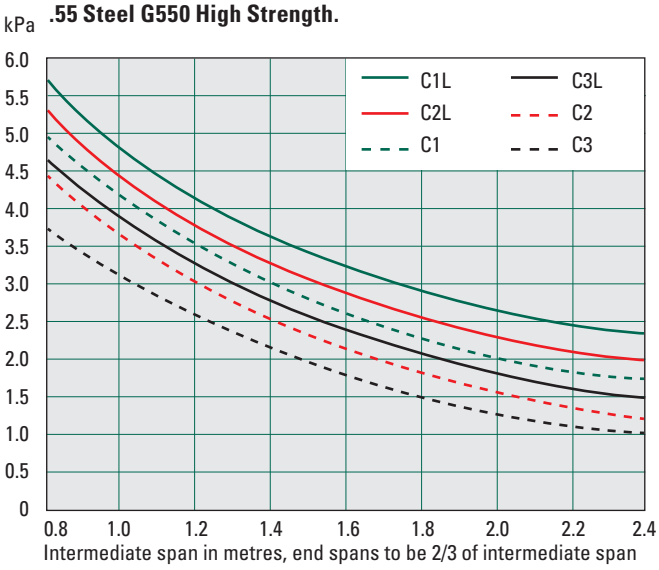

C1L, C2L, C1, C3L,C2 and C3 represent alternative primary fixing methods
Testing confirms that .70mm Aluminium has similar results to .40mm Steel and that .90mm Aluminium has similar results to .55mm Steel and is adjusted for practical application. Aluminium requires load spreading washers and EPDM washers at all times.
For compliance with NZ Metal Roof and Wall Cladding Code of Practice.

Primary Fixing Methods*

Roofing Application

C1L Fix side laps and every 2nd crest with approved screws and load spreading profiled metal washers and EPDM washers.

C2L Fix side laps and miss 1, hit 1, miss 2, hit 1, miss 1, hit 1, miss 2 etc with approved screws and load spreading profiled metal washers and EPDM washers. End purlins and periphery of roof to be fixed every 2nd crest.

C1 Fix side laps and every 2nd crest with approved fasteners alone.

C3L Fix side laps and miss 2, hit 1, miss 3, hit 1,miss 2 etc with approved screws and load spreading profile metal washers and EPDM washers. End purlins and periphery of roof to be fixed every 2nd crest.

C2 Fix side laps and miss 1, hit 1, miss 2, hit 1, miss 1, hit 1, miss 2 etc with approved fasteners alone. End purlins and periphery of roof to be fixed every 2nd crest.

C3 Fix side laps and miss 2, hit 1, miss 3, hit 1, miss 2 etc with approved fasteners alone. End purlins and periphery of roof to be fixed every 2nd crest.

* Note - Compliance with E2/AS1 is dependent on purlin spacing and gauge of roofing. See section on Purlin/Girt Spacing Limitations and Recommendations.

Drape Curved Roofing

The first two purlins at each end of the sheet in drape curving situations should, in all cases, be fixed using profile metal washers and EPDM washers with the balance of the roof fixed as above.

Primary Fixing Methods**

Wall Cladding Application

Fix in the pan adjacent to every side lap over rib and every 2nd pan, and at all external and internal corners.
(No metal washer required)

Wall Cladding Wind Load Span

Pan fixed wall cladding can be assumed to have a wind load design at least equivalent to C1L from the above graphs.

** Note - Compliance with E2/AS1 is dependent on girt spacing and gauge of cladding. See section on Purlin/Girt Spacing Limitations and Recommendations.

To be read in conjunction with Roof Expansion Provisions

PURLIN/GIRT SPACING LIMITATIONS AND RECOMMENDATIONS

Dimensions in metres

Section 1.
For compliance with E2/AS1

Fixing Patterns (Refer to section on Primary Fixing Methods)

End Span	Intermediate Span	Steel Based Material .40mm BMT Windzone: Low & Med	Steel Based Material .40mm BMT Windzone: High & Very High	Steel Based Material .40mm BMT Windzone: Extra High	Steel Based Material .55mm BMT Windzone: Low & Med	Steel Based Material .55mm BMT Windzone: High & Very High	Steel Based Material .55mm BMT Windzone: Extra High	Aluminium H36 .70mm BMT / .90mm BMT
0.4	0.6	C2	C2	C2	C3	C3	C3	Refer to manufacturers recommendation.
0.6	0.9	C2	C2	C1	C3	C3	C3	
0.8	1.2	C2	C1	C1	C3	C3	C3	
1.15	1.6	N/A	N/A	N/A	C3	C3	C2	

N/A - Not applicable

Section 2.
Manufacturers recommendation in accordance with NZ Metal Roof and Wall Cladding Code of Practice (When compliance with E2/AS1 not required)

		Steel Based Material .40mm BMT	Steel Based Material .55mm BMT	Aluminium H36 .70mm BMT	Aluminium H36 .90mm BMT
Restricted Access Roof (Type 2B) (Where walking is permitted within 300mm of the purlin line or over 2 crests)	Intermediate	1.200	1.600	0.800	1.200
	End	0.800	1.100	0.550	0.800
Unrestricted Access Roof (Type 2A) (Where walking is permitted anywhere on the roof cladding)	Intermediate	N/R*	1.200	N/R*	0.900
	End	N/R*	0.800	N/R*	0.600
Non Accessible Roof and Wall Cladding (Type 3)	Intermediate	1.600	2.400	1.500	2.100
	End	1.100	1.600	1.000	1.400
Maximum Recommended Purlin Spacing for standard roof (See notes below)	Intermediate	0.900	1.500	0.800	1.200
	End	0.600	1.000	0.550	0.800
Wind Design Load using fixing method C2 (minimum) as an example at these purlin spacings from the Wind Load Span Design Graphs	Intermediate	1.9kPa	2.3kPa	1.9kPa	2.3kPa
	End	2.5kPa	3.6kPa	2.5kPa	3.6kPa

* Not recommended

Classification Types are from the NZ Metal Roof and Wall Cladding Code of Practice.
For other than compliance with E2/AS1 purlin spacing limitations to be read in conjunction with Wind Load Span Design Graphs.
In areas of heavy traffic purlin spacing should be reduced accordingly.
For curved roofing refer to Information Table.
When self supporting paper is preferred to be used (without any support) purlin spacings must be limited to a maximum of 1.200 mtr centres for vertically run underlay and 1.150 mtr centres for horizontally run underlay. This is particularly relevant with aluminium and /or severe marine environments for the reasons designated under Building Design/Performance/Product Selection part of this document.

Snow Loads

When the possibility of snow exists it is necessary to allow for the extra imposed snow loads by increasing the strength of the structure, and/or minimising the build up of snow, and this is generally achieved by increasing the roof pitch by allowing easier shedding of the snow or otherwise as the designer determines.

The objective is to simplify rather complex loading patterns while remaining adequately cautious. The design loads should take account of drifting snow due to wind,but wind loads are not required to be combined with snow loads.

As snow loads are uniformly distributed loads they are similar to wind loads.

Snow loadings are not required to be taken into account for the North Island of New Zealand north of a line drawn from Opotiki to Turangi and New Plymouth.

However for other areas snow loadings may need to be taken into account dependent on the area and altitude of the proposed project. A fuller reference including a map and chart is available from the NZ Metal Roofing Roof and Wall Cladding Code of Practice Section 3.5.

KDC - Approved Building Consent Document - BC210608_SD_ISSUED - Pg 30 of 125 - 29/09/2021 - vsingh

KDC - Approved Building Consent Document - BC210608_SD_ISSUED - Pg 31 of 125 - 29/09/2021 - vsingh

PRIMARY FIXING CHART

Roofing - Crest fixed (To be read in conjunction with Roof Expansion Provisions and Load Span Design Graphs)

	Wood Purlins	Steel Purlins or girts up to 1.5mm	Steel Purlins or girts 1.5-4.5mm	Steel Purlins or girts 4.5-12mm	Washers (When required)
Steel Based Material	12-11x50 Class 4 Type 17 Woodteks or Roofzips with neos or 60mm weatherseal nails	12-14x45 Class 4 Steelteks with neos or 12x50 Roofzips with neos	12-14x45 Class 4 Steelteks with neos	12-24x 50 Class 4 Series 500 Steelteks with neos	Corrugated load spreading profile Metal and 30mm EPDM
Aluminium Based Material	14-11x55 Alutite with bonded washer with Corrugate load spreading profile Ali washer & 30mm EPDM	Stainless steel grade 304, 14-14x70 Steelteks and bonded washers through a 10mm dia. clearance hole with Corrugate load spreading profile Ali washer & 30mm EPDM	Stainless steel grade 304, 14-14x70 Steelteks and bonded washer through a 10mm dia. clearance hole with Corrugate load spreading profile Ali washer & 30mm EPDM	Fabco stainless steel grade 304, 14-14x70 Type B screw and bonded washer through a 10mm dia clearance hole with Corrugate load spreading profile Ali washer and 30mm EPDM	Corrugate load spreading profile Ali and 30mm EPDM

Wall Cladding - Pan fixed

	Wood Purlins	Steel Purlins or girts up to 1.5mm	Steel Purlins or girts 1.5-4.5mm	Steel Purlins or girts 4.5-12mm	Washers (When required)
Steel Based Material Direct fixed	12-11x40 Class 4 Type 17 Woodteks with neos	12-14x20 Class 4 Steelteks with neos	12-14x20 Class 4 Steelteks with neos	12-24x32 Class 4 Steelteks Series 500 with neos	
Steel Based Material 20mm Cavity	12-11x50 Class 4 Type 17 Woodteks or Roofzips with neos	12-14x45 Class 4 Steelteks with neos or 12x50 Roofzips with neos	12-14x45 Class 4 Steelteks with neos	12-24x50 Class 4 Steelteks Series 500 with neos	
Aluminium Based Material Direct Fixed	12-11x35 Alutite with bonded washer	Stainless steel grade 304, 14-14x25 Steelteks and bonded washer through a 10mm diameter clearance hole with 19mm bonded Ali washer	Stainless steel grade 304, 14-14x25 Steelteks and bonded washer through a 10mm diameter clearance hole with 19mm bonded Ali washer	Fabco stainless steel grade 304, 14-14x20 Type B screw and bonded washer through a 10mm diameter clearance hole with 19mm bonded Ali washer	19mm bonded Ali washer
Aluminium Based Material 20mm Cavity	12-14x55 Alutite with bonded washer	Stainless steel grade 304, 14-14x70 Steelteks and bonded washer through a 10mm diameter clearance hole with 19mm bonded Ali washer	Stainless steel grade 304, 14-14x70 Steelteks and bonded washer through a 10mm diameter clearance hole with 19mm bonded Ali washer	Fabco stainless steel grade 304, 14-14x70 Type B screw and bonded washer through a 10mm diameter clearance hole with 19mm bonded Ali washer	19mm bonded Ali washer

Note: All primary fasteners to have a minimum embedment into structural timber of 30mm. Adjust fastener length for both timber and steel fixings when necessary for battens etc. When using load spreading profile washers for roofing fix ridging, roof flashings etc. using a 25mm Aluminium embossed washer and appropriate screw.

Secondary Fasteners (To be used in accordance with the NZ Metal Roof and Wall Cladding Code of Practice.)

These should be:

- Aluminium Blind Rivets AS5-3 x 4mm minimum (Residential)
- Aluminium Blind Rivets AS 6-3 x 4.8mm minimum (Commercial)
- Aluminium Bulb-tite Rivets
- 12-11x35 Alutites
- 12-11x25 Class 4 Type 17 Woodteks (Steel based material only)

ROOF EXPANSION PROVISIONS

Fix with recommended fasteners and systems from the Primary Fixing Chart and additionally allow for the following where applicable.

Steel Based Material				
E2/AS1 Compliance				
Sheet Lengths	**Up to 8 metres**	**>8-12 metres**	**>12-18 metres**	**>18 metres**
	No special provision	Lower 50 % of the roof should be fixed using oversize holes at fastening points with approved load spreading profile washer, and 30mm EPDM washers		Not Applicable
NZ Metal Roof and Wall Cladding Code of Practice Compliance				
Sheet Lengths	**Up to 15 metres**	**>15-18 metres**	**>18-24 metres**	**>24-30 metres**
Zincalume and light colours in Favourable Installations (Refer NZMRM C.O.P. Section 4.1.6)	No special provision	No special provision except screws are recommended	No special provision except screws are recommended	Solid fix using screws from the ridge down 24 metres and oversize holes should be used for the remainder of the sheet with approved load spreading profile washers, and 30mm EPDM washers
Dark Colours in Favourable Installations (Refer NZMRM C.O.P. Section 4.1.6)	No special provision	No special provision except screws are recommended	Solid fix using screws from the ridge down 18 metres and oversize holes should be used for the remainder of the sheet with approved load spreading profile washers, and 30mm EPDM washers	Not recommended*
Zincalume and light colours in Unfavourable Installations (Refer NZMRM C.O.P. Section 4.1.6)	No special provision	No special provision except screws are recommended	Solid fix using screws from the ridge down 18 metres and oversize holes should be used for the remainder of the sheet with approved load spreading profile washers, and 30mm EPDM washers. *Maximum recommended sheet length is 25 metres	
Dark Colours in Unfavourable Installations (Refer NZMRM C.O.P. Section 4.1.6)	No special provision	Solid fix using screws from the ridge down 15 metres and oversize holes should be used for the remainder of the sheet with approved load spreading profile washers, and 30mm EPDM washers.		* Not recommended over 25 metres

For sheet lengths in excess of the above a step joint or other special provision for expansion is required. Refer to Roofing Industries.
When using load spreading profile washers for roofing fix ridging, roof flashings etc. using a 25mm Aluminium embossed washer and appropriate screw.
Oversize holes should be 3mm greater diameter than the screw or as per the Primary Fixing Chart for stainless steel screws.
For further information on the fixing of Corrugated refer to E2/AS1 of the NZ Building Code and NZ Metal Roof and Wall Cladding Code of Practice, www.metalroofing.org.nz
These publications along with the foregoing technical data should form the basis of the design and installation of metal roofing and cladding
Also refer to our suite of detail drawings, and to NZ Steel Ltd and Pacific Coilcoaters literature.

KDC - Approved Building Consent Document - BC210608_SD_ISSUED - Pg 32 of 125 - 29/09/2021 - vsingh

ROOF EXPANSION PROVISIONS

Fix with recommended fasteners and systems from the Primary Fixing Chart and additionally allow for the following where applicable.

Aluminium				
Sheet Lengths	**Up to 10 metres**	**10-12 metres**	**12-15 metres**	**>15 metres**
Plain Aluminium & lighter colours in Favourable Installations (Refer NZMRM C.O.P. Section 4.1.6)	Fix using oversize holes with screws and approved load spreading profile Ali washers, and 30mm EPDM washers			Not recommended
Dark Coloured Aluminium in Favourable Installations (Refer NZMRM C.O.P. Section 4.1.6)	Fix using oversize holes with screws and approved load spreading profile Ali washers, and 30mm EPDM washers		Not recommended	
Plain Aluminium & lighter colours in Unfavourable Installations (Refer NZMRM C.O.P. Section 4.1.6)	Fix using oversize holes with screws and approved load spreading profile Ali washers, and 30mm EPDM washers		Not recommended	
Dark Coloured Aluminium in Unfavourable Installations (Refer NZMRM C.O.P. Section 4.1.6)	Fix using oversize holes with screws and approved load spreading profile Ali washers, and 30mm EPDM washers.	Not recommended		

For sheet lengths in excess of the above a step joint or other special provision for expansion is required. Refer to Roofing Industries.
When using load spreading profile washers for roofing fix ridging, roof flashings etc. using a 25mm Aluminium embossed washer and appropriate screw.
Oversize holes should be 3mm greater diameter than the screw or as per the Primary Fixing Chart for stainless steel screws.
For further information on the fixing of Corrugated refer to E2/AS1 of the NZ Building Code and NZ Metal Roof and Wall Cladding Code of Practice, www.metalroofing.org.nz
These publications along with the foregoing technical data should form the basis of the design and installation of metal roofing and cladding
Also refer to our suite of detail drawings, and to NZ Steel Ltd and Pacific Coilcoaters literature.

KDC - Approved Building Consent Document - BC210608_SD_ISSUED - Pg 33 of 125 - 29/09/2021 - vsingh

Thermakraft™



KDC - Approved Building Consent Document - BC210608_SD_ISSUED - Pg 34 of 125 - 29/07/2021 - vsingh

Product Data Sheet

WATERGATE PLUS

New Zealand's premium all-purpose, fire retardant wall wrap.

Watergate Plus is specifically designed as a wall underlay behind exterior wall cladding. Made from synthetic materials Watergate Plus is fire retardant, water resistant and vapour permeable. The water vapour transfer rate of the product has been optimised to minimise condensation risk in homes without compromising its primary water barrier properties.

Watergate Plus is part of the Thermakraft One Wrap System. Its unique construction allows for easier installation while maintaining best in class performance qualities.

Smarter products. Better buildings.
thermakraft.co.nz

CodeMark BRANZ-CM-1002

BRANZ Appraised
Appraisal No.695 [2017]

Watergate Plus

Premium Synthetic Wall Wrap

KDC - Approved Building Consent Document - BC210608_SD_ISSUED - Pg 35 of 125 - 29/09/2021 - vsingh

Watergate Plus comes in five roll sizes and two soffit roll sizes:

Roll Dimensions			
Product Code	**Width**	**Length**	**Coverage**
WGP1370025	1370mm wide	18.5m long	25m² coverage*
WGP1370050	1370mm wide	37.0m long	50m² coverage*
WGP1370100	1370mm wide	73.0m long	100m² coverage*
WGP2740050	2740mm wide	18.5m long	50m² coverage*
WGP2740100	2740mm wide	36.5m long	100m² coverage*

Soffit Roll Dimensions			
Product Code	**Width**	**Length**	**Coverage**
WGP600025SOF	685mm wide	36.5m long	25m² coverage*
WGP600050SOF	685mm wide	73.0m long	50m² coverage*

Custom Branding Available – Contact your Thermakraft Representative for more details

* **Note:** m² is the roll size. For actual coverage, allow for laps and joins.

Product Description

Watergate Plus is a two-layer laminated wall underlay combining a Polyester non-woven layer with a high quality vapour permeable film. This allows water vapour to pass through from inside the wall cavity whilst water from the exterior is kept out.

The product is simply fixed to timber framing using construction staples and is made to stretch around corners providing a tight fit and reducing the risk of staple tear. It will provide temporary weather protection during construction. (Max 90 Days).

Scope of Use

Watergate Plus can be used as a wall underlay on both residential and commercial buildings within the following scope:

- With absorbent wall claddings (e.g. timber, brick or fibre cement) or non-absorbent wall claddings (e.g. metal or plastic).
- Can be used with timber and steel framing, either directly fixed or in conjunction with an 18mm minimum drained cavity.
- With masonry veneer in accordance with NZBC Acceptable Solution E2/AS1 and E2/AS4.
- Situated in NZS3604 and NASH Building Wind Zones up to (and including) 'Very High' when used as a standalone flexible underlay, and "Extra High" when used as a flexible underlay over a rigid wall underlay.
- Is suitable as an air barrier in unlined wall spaces.
- Is suitable to be used in conjunction with thermal breaks on steel framed buildings.
- Refer to BRANZ Appraisal No 695 (2017) and CodeMark Certificate BRANZ-CM-1002 for full details.

General

- Fire retardant.
- Unaffected by LOSP or other solvent based treated timber. However, LOSP or other solvent based treated timber must have sufficient time for the solvent to flash off in a well ventilated area. Recommended minimum 7 days.

Limitations

- Must NOT be used as a roof underlay.
- Must NOT be exposed to the weather or UV for more than 90 days.
- Watergate Plus is NOT a vapour barrier.

Compliance

- Watergate Plus has been appraised with the scope limitations of NZBC Acceptable Solution E2/AS1, Paragraph 1.1 and E2/AS4, with regards to building height and floor plan area.
- Watergate Plus has also been BRANZ appraised for use on buildings subject to specific weathertightness design. Building designers are responsible for the building design and for the incorporation of Watergate Plus into their design in accordance with the declared properties and the instructions of Thermakraft Ltd.

Thermakraft

Watergate Plus

Premium Synthetic Wall Wrap

KDC - Approved Building Consent Document - BC210608_SD_ISSUED - Pg 36 of 125 - 29/09/2021 - vsingh

Flammability Index

Thermakraft Watergate Plus Wall Underlay has an AS 1530 Part 2 Flammability Index of not greater than 5 and therefore meets the requirements of NZBC Acceptable Solutions C/AS2, Paragraph 4.17.8 b), for the surface finish requirements of suspended flexible fabric used as an underlay to exterior cladding that is exposed to view in occupied spaces.

Durability

Meets the Performance Requirements of NZBC Clauses B2, Durability (B2.3.1 (a) 50 years, B2.3.1 (b) 15 years and B2.3.2), E2 External Moisture (E2.3.2), and F2 Hazardous Building Materials F2.3.1, providing:

- It is not damaged.
- Installed in accordance with instruction guide.
- Is not left exposed for more than 90 days.
- Installed by or under guidance of Licensed Building Practitioners.
- Is compatible with cladding system used.*

* **Note:** specifiers and product user must confirm wall cladding system compatibility with the underlay before installation.

Product Warranty

Standard Thermakraft warranty applies. Refer to Thermakraft Warranty Statement for further details. This is available online at **thermakraft.co.nz** or call **0800 806 595.**

Property Performance

NZBC E2/AS1 Table 23 (NZS2295) Wall Underlay Properties	Absorbency	Vapour Resistance	pH of Extract	Shrinkage	Water Resistance	Air Resistance
Property Performance Requirement	≥ 100gsm	≤ 7 MN.s/g	≥ 6 and ≤ 9	≤ 0.5%	≥ 20mm	≥ 0.1 MN.s/m^3
Property Performance	Pass	Pass	Pass	Pass	Pass	Can be used as an air barrier

Thermakraft Limited / 0800 806 595

Smarter products. Better buildings.

thermakraft.co.nz

CodeMark BRANZ-CM-1002

BRANZ Appraised Appraisal No.695 [2017]

The recommendations contained in Thermakraft's literature are based on good building practice, but are not an exhaustive statement of all relevant information and are subject to any conditions contained in the Warranty. All product dimensions and performance claims are subject to any variation caused by normal manufacturing process and tolerances. Furthermore, as the successful performance of the relevant system depends on numerous factors outside the control of Thermakraft (for example quality of workmanship and design), Thermakraft shall not be liable for the recommendations in that literature and the performance of the Product, including its suitability for any purpose or ability to satisfy the relevant provisions of the Building Code, regulations and standards. Literature subject to change without notification. Latest documentation can be found on the website. E&OE.

Issue 9, September 2021

KDC - Approved Building Consent Document - BC210608_SD_ISSUED - Pg 37 of 125 - 29/09/2021 - vsingh

BRANZ Appraised
Appraisal No. 764 [2017]

SHADOWCLAD® VENTILATED CAVITY CLADDING SYSTEM

Appraisal No. 764 (2017)
This Appraisal replaces BRANZ Appraisal No. 764 (2011)
Amended 1 March 2021



BRANZ Appraisals
Technical Assessments of products for building and construction.

Carter Holt Harvey Plywood Ltd
Private Bag 92-106
Auckland
Tel: 0800 326 759
Fax: 09 633 1582
Web: www.chhply.co.nz

BRANZ
1222 Moonshine Rd,
RD1, Porirua 5381
Private Bag 50 908
Porirua 5240,
New Zealand
Tel: 04 237 1170
branz.co.nz

Product

1.1 Shadowclad® Ventilated Cavity is a cavity-based external wall cladding system for residential and light commercial type buildings where domestic construction techniques are used.

1.2 The system consists of Shadowclad® sheets, timber cavity battens, flashings and accessories and is finished with either an acrylic paint system or penetrating, or film forming stain.

1.3 Shadowclad® Ventilated Cavity incorporates a primary and secondary means of weather resistance (first and second line of defence) against water penetration by separating the cladding from the external wall frame with a nominal 20 mm drained cavity.

Scope

2.1 Shadowclad® Ventilated Cavity has been appraised as an external wall cladding for buildings within the following scope:

- the scope limitations of NZBC Acceptable Solution E2/AS1, Paragraph 1.1; and,
- constructed with timber framing complying with the NZBC; and,
- with a risk score of 0-20, calculated in accordance with NZBC Acceptable Solution E2/AS1, Table 2; and, The use of dark colours with an LRV of less than 50 and failure to adequately maintain them increases the risk of aesthetic related issues such as face checking. For this reason CHH Plywood does not support the use of dark colours on Shadowclad exterior cladding.
- situated in NZS 3604 Wind Zones up to, and including Extra High; and,
- with a building height of ≤ 10 m and at a distance of ≥ 1.0 m to the relevant boundary.

2.2 Shadowclad® Ventilated Cavity has also been appraised as an external wall cladding for specifically designed buildings within the following scope:

- the scope limitations of NZBC Acceptable Solution E2/AS1, Paragraph 1.1; and,
- constructed with timber framing complying with the NZBC; and,
- situated in specific design wind pressures up to a maximum design differential ultimate limit state (ULS) of 2.5 kPa; and,
- with a building height of ≤ 10 m and at a distance of ≥ 1.0 m to the relevant boundary.

2.3 Shadowclad® Ventilated Cavity is appraised for use with aluminium window and door joinery that is installed with vertical jambs and horizontal heads and sills. *[The Appraisal of Shadowclad® Ventilated Cavity relies on the joinery meeting the requirements of NZS 4211 for the relevant Wind Zone or wind pressure.]*

Readers are advised to check the validity of this Appraisal by referring to the Valid Appraisals listing on the BRANZ website, or by contacting BRANZ.

KDC - Approved Building Consent Document - BC210608_SD_ISSUED - Pg 38 of 125 - 29/09/2021 - vsingh

Building Regulations

New Zealand Building Code (NZBC)

3.1 **In the opinion of BRANZ, Shadowclad® Ventilated Cavity, if designed, used, installed and maintained in accordance with the statements and conditions of this Appraisal, will meet the following provisions of the NZBC:**

Clause B1 STRUCTURE: Performance B1.3.1, B1.3.2 and B1.3.4. Shadowclad® Ventilated Cavity meets the requirement for loads arising from self-weight, wind, impact and creep [i.e. B1.3.3 (a), (f), (j) and (q)]. See Paragraphs 9.1 – 9.3.

Clause B2 DURABILITY: Performance B2.3.1 (b), 15 years, and B2.3.2. Shadowclad® Ventilated Cavity meets these requirements. See Paragraphs 10.1 - 10.5.

Clause E2 EXTERNAL MOISTURE: Performance E2.3.2. Shadowclad® Ventilated Cavity meets this requirement. See Paragraphs 14.1 - 14.5.

Clause F2 HAZARDOUS BUILDING MATERIALS: Performance F2.3.1. Shadowclad® Ventilated Cavity meets this requirement and will not present a health hazard to people.

Technical Specification

4.1 System components and accessories supplied by Carter Holt Harvey Plywood Limited are as follows:

Shadowclad® Sheets

- Shadowclad® sheets are nominal 12 mm thick structural plywood sheets manufactured from New Zealand pinus radiata veneers. They are 1216 mm wide and either 2440 mm or 2745 mm long. They have a textured surface finish on the exposed face.
- Shadowclad® sheets are available as either Shadowclad® Natural or Shadowclad® Ultra finish. Shadowclad® Natural is an uncoated panel for use with penetrating stains, film forming stains and paints. Shadowclad® Ultra has a factory applied powder coat exterior primer for use with paints and film forming stain topcoats. Shadowclad® Ultra is not suitable for use with penetrating stains.
- Shadowclad® Natural and Shadowclad® Ultra are both available as Texture and Texture Groove surface finish. Texture Groove has 9 mm wide by 5 mm deep grooves at 150 mm centres running vertically down the outside face of the sheet.
- Shadowclad® Natural sheets are available as Hazard Class H3.1 treated only. Shadowclad® Ultra sheets are available in either H3.1 or H3.2 CCA treated.

Shadowclad® Accessories

- **Shadowclad® flashings:** horizontal 'Z' flashing, inter-storey 'Z' flashing, internal 90° angle, internal 'W' angle, large internal 'W' angle, external box angle, large external box angle and flat flashing for vertical negative detail. Shadowclad® flashings are available in extruded aluminium and folded stainless steel.
- **Cavity vent strip**: manufactured from aluminium or stainless steel, available in 3600 mm lengths.

4.2 Accessories used with Shadowclad® Ventilated Cavity which are supplied by the building contractor are:

- **Shadowclad® sheet fixings:** 60 x 2.8 mm hot-dip galvanised or ring shank stainless steel flat head nails, 8 gauge x 65 mm AS 3566 Corrosion Class 4 mechanically zinc plated wood screws or 8 gauge x 65 mm stainless steel wood screws. *[Note: Stainless steel fixings must be Grade 316 and hot-dip galvanising must comply with AS/NZS 4680].*
- **Exterior Battens:** 65 mm wide x 18 mm thick timber batten, dressed or bandsawn, treated to Hazard Class H3.1 and with 6 x 6 mm weathergrooves.
- **Cavity battens:** nominal 45 mm wide x 20 mm thick or 75 mm wide x 20 mm thick merchant grade timber treated to Hazard Class H3.1.
- **Cavity batten fixings:** 40 x 2.5 mm hot-dip galvanised or stainless steel ring shank flat head nails.

Readers are advised to check the validity of this Appraisal by referring to the Valid Appraisals listing on the BRANZ website, or by contacting BRANZ.

KDC - Approved Building Consent Document - BC210608_SD_ISSUED - Pg 39 of 125 - 29/09/2021 - vsingh

- **Flexible wall underlay:** wall underlay complying with NZBC Acceptable Solution E2/AS1, Table 23, or breather-type membranes covered by a valid BRANZ Appraisal for use as wall underlay.
- **Rigid wall underlay:** sheet complying with NZBC Acceptable Solution E2/AS1, Table 23, or rigid sheathing covered by a valid BRANZ Appraisal for use as rigid air barrier systems.
- **Brush on timber preservative:** brush on timber preservatives as listed in the Technical Literature for Shadowclad® Ventilated Cavity.
- **Flexible flashing tape:** flexible flashing tapes complying with NZBC Acceptable Solution E2/AS1, Paragraph 4.3.11, or flexible flashing tapes covered by a valid BRANZ Appraisal for use around window and door joinery openings.
- **Window and door trim cavity air seal:** air seals complying with NZBC Acceptable Solution E2/AS1, Paragraph 9.1.6, or self-expanding, moisture cure polyurethane foam air seals covered by a valid BRANZ Appraisal suitable for use around window, door and other wall penetration openings.
- **Joinery head flashings:** folded from aluminium or galvanised steel to suit the window or door trim opening. Refer to NZS 3604, Section 4 and NZBC Acceptable Solution E2/AS1, Table 20 for durability requirements.
- **Flexible sealant:** sealant complying with NZBC Acceptable Solution E2/AS1, or sealant covered by a valid BRANZ Appraisal for use as a weather sealing sealant for exterior use.

Finishing System Specification

4.3 Paint and stain systems are not supplied by Carter Holt Harvey Plywood Limited and have not been assessed by BRANZ and are therefore outside the scope of this Appraisal.

4.4 All exposed faces, including top edges at sills and all bottom edges of Shadowclad® sheets must be finished with a latex exterior paint system complying with any of Parts 7, 8, 9, or 10 of AS 3730, or at least two coats of a film forming or penetrating stain to protect the Shadowclad® and give the desired finish colour to the exterior walls.

[Note: Carter Holt Harvey Plywood Limited does not recommend that Shadowclad® is left uncoated when used as an exterior cladding. Using dark colours with an LRV of less than 50%, and failure to adequately maintain the surface coating of the cladding increases the risk of aesthetic related issues such as face checking. For this reason, Carter Holt Harvey Plywood Limited does not support the use of dark colours on Shadowclad® exterior cladding.]

Handling and Storage

5.1 Handling and storage of all materials supplied by Carter Holt Harvey Plywood Limited or the building contractor, whether on-site or off-site, is under the control of the building contractor. Shadowclad® sheets must be stacked flat, clear of the ground on at least three evenly spaced timber bearers. They must be kept dry at all times either by storing within an enclosed building or under cover when stored externally. Care must be taken to avoid damage to edges, ends and the primed surfaces.

5.2 Accessories must be stored so they are kept clean, dry and undamaged. All accessories must be used within the maximum storage period recommended by the manufacturer.

Technical Literature

6.1 Refer to the Appraisals listing on the BRANZ website for details of the current Technical Literature for Shadowclad® Ventilated Cavity. The Technical Literature must be read in conjunction with this Appraisal. All aspects of design, use, installation and maintenance contained in the Technical Literature and within the scope of this Appraisal must be followed.

Readers are advised to check the validity of this Appraisal by referring to the Valid Appraisals listing on the BRANZ website, or by contacting BRANZ.

KDC - Approved Building Consent Document - BC210608_SD_ISSUED - Pg 40 of 125 - 29/09/2021 - vsingh

Design Information

Framing

Timber Treatment

7.1 Timber wall framing behind Shadowclad® Ventilated Cavity must be treated as required by NZBC Acceptable Solution B2/AS1.

Timber Framing

7.2 Timber framing must comply with NZS 3604 for buildings or parts of buildings within the scope limitations of NZS 3604. Buildings or parts of buildings outside the scope of NZS 3604 must be to a specific design in accordance with NZS 3603 and AS/NZS 1170. Where specific design is required, the framing must be of at least equivalent stiffness to the framing provisions of NZS 3604. In all cases studs must be at maximum 600 mm centres. Dwangs must be fitted flush between the studs at maximum 800 mm centres.

7.3 Additional framing may be required at soffits, internal and external corners and window and door openings for the support and fixing of cavity battens and Shadowclad® Ventilated Cavity.

7.4 Timber wall framing and cavity battens must have a maximum moisture content of 20% at the time of the cladding application. *[Note: If Shadowclad® is fixed to framing with a moisture content of greater than 20% problems may occur at a later date due to excessive timber shrinkage.]*

General

8.1 When Shadowclad® Ventilated Cavity is used for specifically designed buildings up to 2.5 kPa design differential ULS wind pressure, only the weathertightness aspects of the cladding and maximum framing centres are within the scope of this Appraisal. All other aspects of the building need to be specifically designed and are outside the scope of this Appraisal.

8.2 Punchings in the cavity vent strip provide a minimum ventilation opening area of 1000 mm^2 per lineal metre of wall in accordance with the requirements of NZBC Acceptable Solution E2/AS1, Paragraph 9.1.8.3 [b].

8.3 The ground clearance to finished floor levels as set out in NZS 3604 must be adhered to at all times. At ground level, paved surfaces such as footpaths must be kept clear of the bottom edge of the cladding system by a minimum of 100 mm, and unpaved surfaces by 175 mm in accordance with the requirements of NZBC Acceptable Solution E2/AS1, Table 18.

8.4 At balcony, deck or roof/wall junctions, the bottom edge of Shadowclad® Ventilated Cavity must be kept above the top surface of any adjacent roof flashing by a minimum of 35 mm in accordance with NZBC Acceptable Solution E2/AS1, Paragraph 9.1.3.

8.5 All external walls of buildings must have barriers to airflow in the form of interior linings with all joints stopped for wind zones up to and including Very High, and rigid underlays for buildings in the Extra High wind zone and specifically designed buildings up to 2.5 kPa design differential ULS wind pressure. Unlined gables and walls must incorporate a rigid sheathing or an air barrier which meets the requirements of NZBC Acceptable Solution E2/AS1, Table 23. For attached garages, wall underlays must be selected in accordance with NZBC Acceptable Solution E2/AS1, Paragraph 9.1.3.4. Where rigid underlays are used, the cavity batten fixing lengths must be increased by a minimum of the thickness of the underlay.

8.6 Where cladding penetrations are wider than the cavity batten spacing, allowance must be made for airflow between adjacent cavities by leaving a minimum gap of 10 mm between the bottom of the cavity and the flashing to the opening.

8.7 Where the system abuts other cladding systems, designers must detail the junction to meet their own requirements and the performance requirements of the NZBC. These details have not been assessed and are outside the scope of this Appraisal.

Readers are advised to check the validity of this Appraisal by referring to the Valid Appraisals listing on the BRANZ website, or by contacting BRANZ.

KDC - Approved Building Consent Document - BC210608_SD_ISSUED - Pg 41 of 125 - 29/09/2021 - vsingh

Inter-storey Junctions

8.8 Inter-storey junctions must be constructed in accordance with the Technical Literature. Inter-storey joints must be provided to limit continuous cavities to the lesser of 2-storeys or 7 metres in height, in accordance with the requirements of NZBC Acceptable Solution E2/AS1, Paragraph 9.1.9.4 (b).

Structure

Mass

9.1 The mass of Shadowclad® Ventilated Cavity is approximately 6.6 kg/m^2 at equilibrium moisture content. The system is therefore considered a lightweight cladding in terms of NZS 3604.

Impact Resistance

9.2 Shadowclad® Ventilated Cavity has good resistance to impact loads likely to be encountered in normal residential use. The likelihood of impact damage to Shadowclad® Ventilated Cavity when used in light commercial situations should be considered at the design stage, and appropriate protection such as the installation of bollards and barriers should be considered for vulnerable areas.

Wind Zones

9.3 Shadowclad® Ventilated Cavity is suitable for use in all Building Wind Zones of NZS 3604, up to and including Extra High where buildings are designed to meet the requirements of NZBC Acceptable Solution E2/AS1, Paragraph 1.1, or up to 2.5 kPa design differential ULS wind pressure where buildings are specifically designed.

Durability

10.1 Shadowclad® Ventilated Cavity meets the performance requirements of NZBC Clause B2.3.1 (b), 15 years for the Shadowclad® and flashings when used as a non-structural cladding installed in accordance with the Technical Literature.

10.2 Shadowclad® is envelope preservative treated. Where sheets are cut, all cuts must be coated with a brush on timber preservative specified in the Technical Literature for Shadowclad® Ventilated Cavity. Failure to correctly apply preservative to these areas may negatively affect the durability of the cut sheets.

Serviceable Life

10.3 Shadowclad® Ventilated Cavity installations finished with penetrating stain or non-penetrating film forming stain, are expected to have a serviceable life of at least 15 years provided they are maintained in accordance with this Appraisal. *[Note: This opinion only covers serviceability with regards to structural and weathertightness performance. It does not cover appearance, which may deteriorate significantly, especially when proper and regular maintenance is not carried out. Carter Holt Harvey Plywood Limited does not recommend that Shadowclad be left uncoated when used as an exterior cladding.]*

10.4 The use of dark colours with an LRV of less than 50 and failure to adequately maintain the coating increases the risk of aesthetic related issues such as face checking. For this reason Carter Holt Harvey Plywood Limited does not support the use of dark colours on Shadowclad® exterior cladding.

10.5 Coastal locations can be very corrosive to fasteners, especially locations within distances of up to 500 m from the sea including harbours, or 100 metres from tidal estuaries and sheltered inlets, and otherwise as shown in NZS 3604, Figure 4.2. These coastal locations are defined in NZS 3604 as Zone D. It is recommended that Shadowclad® sheets be fixed with stainless steel fasteners in these situations.

10.6 When using CCA treated Shadowclad®, aluminium extrusions must be coated in accordance with the requirements of NZBC E2/AS1, Table 20, and are not suitable for use in NZS 3604 Corrosion Zone D. When used with CCA treated Shadowclad®, horizontal Z-flashings must be manufactured from stainless steel in all Corrosion Zones.

Readers are advised to check the validity of this Appraisal by referring to the Valid Appraisals listing on the BRANZ website, or by contacting BRANZ.

KDC - Approved Building Consent Document - BC210608_SD_ISSUED - Pg 42 of 125 - 29/09/2021 - vsingh

10.7 Microclimatic conditions, including geothermal hot spots, industrial contamination and corrosive atmospheres, and contamination from agricultural chemicals or fertilisers can convert a mildly corrosive atmosphere into an aggressive environment for fasteners. The fixing of Shadowclad® sheets in areas subject to microclimatic conditions requires specific design in accordance with NZS 3604, Paragraph 4.2.4, and is outside the scope of this Appraisal.

Maintenance

11.1 Regular maintenance is essential to ensure the performance requirements of the NZBC are continually met and to ensure the maximum serviceability of the system.

11.2 Regular cleaning (at least annually) of the paint coating is required to remove grime, dirt and organic growth and to maximise the life and appearance of the coating. Grime may be removed by brushing with a soft brush, warm water and detergent. Paint systems must be recoated at approximately 7 – 10 yearly intervals in accordance with the paint manufacturer's instructions. Penetrating and non-penetrating stains must be recoated every 2 – 3 years in accordance with the stain manufacturer's instructions.

11.3 Annual inspections must be made to ensure that all aspects of the cladding system, including the selected finishing system, flashings and any sealed joints remain in a weatherproof condition. Any damaged areas or areas showing signs of deterioration which would allow water ingress must be repaired immediately. Sealant and paint coatings must be repaired in accordance with the relevant manufacturer's instructions.

11.4 Minimum ground clearances as set out in this Appraisal and the Technical Literature must be maintained at all times during the life of the system. *[Failure to adhere to the minimum ground clearances given in this Appraisal and the Technical Literature will adversely affect the long term durability of Shadowclad® Ventilated Cavity installations.]*

Control of External Fire Spread

12.1 Shadowclad® Ventilated Cavity has not been assessed for a peak heat release or total heat released rating. Refer to NZBC Acceptable Solutions and Verification Methods C/AS1, C/AS2 and C/VM2 for requirements for fire rating and exterior surface finish requirements of external walls..

Prevention of Fire Occurring

13.1 Separation or protection must be provided to Shadowclad® Ventilated Cavity from heat sources such as fire places, heating appliances, flues and chimneys. Part 7 of NZBC Acceptable Solutions C/AS1, C/AS2 and NZBC Verification Method C/VM1 provide methods for separation and protection of combustible materials from heat sources.

External Moisture

14.1 Shadowclad® Ventilated Cavity, when installed in accordance with this Appraisal and the Technical Literature will prevent the penetration of moisture that could cause undue dampness or damage to building elements.

14.2 The cavity must be sealed off from the roof and sub-floor space to meet code compliance with NZBC Clause E2.3.5.

14.3 Shadowclad® Ventilated Cavity allows excess moisture present at the completion of construction to be dissipated without permanent damage to building elements to meet code compliance with NZBC Clause E2.3.6.

14.4 The details given in the Technical Literature for weather sealing are based on the principle of having a first and second line of defence against moisture entry for all joints, penetrations and junctions. The ingress of moisture must be excluded by detailing joinery and wall interfaces as shown in the Technical Literature. Weathertightness details that are developed by the designer are outside the scope of this Appraisal and are the responsibility of the designer for compliance with the NZBC.

14.5 Shadowclad® Ventilated Cavity, where there is a designed cavity drainage path for moisture that penetrates the cladding, does not reduce the requirements for junctions, penetrations, etc to remain weather resistant.

Readers are advised to check the validity of this Appraisal by referring to the Valid Appraisals listing on the BRANZ website, or by contacting BRANZ.

KDC - Approved Building Consent Document - BC210608_SD_ISSUED - Pg 43 of 125 - 29/09/2021 - vsingh

Internal Moisture

15.1 Buildings must be constructed with an adequate combination of thermal resistance and ventilation, and space temperature must be provided to all habitable spaces, bathrooms, laundries and other spaces where moisture may be generated or may accumulate.

Water Vapour

15.2 Shadowclad® Ventilated Cavity is not a barrier to the passage of water vapour, and when installed in accordance with this Appraisal will not create a risk of moisture damage resulting from condensation.

Installation Information

Installation Skill Level Requirements

16.1 Installation must always be carried out in accordance with the Shadowclad® Ventilated Cavity Technical Literature and this Appraisal by, or under the supervision of, a Licensed Building Practitioner (LBP) with the relevant Licence Class.

Shadowclad® Ventilated Cavity Installation

Wall Underlay and Flexible Sill and Jamb Tape Installation

17.1 The selected wall underlay and flexible sill and jamb tape system must be installed by the building contractor in accordance with the underlay and tape manufacturers' instructions prior to the installation of the cavity battens and the rest of the Shadowclad® Ventilated Cavity system. Flexible wall underlay must be installed horizontally and be continuous around corners. Underlay must be lapped 75 mm minimum at horizontal joints and 150 mm minimum over studs at vertical joints. Generic rigid underlay materials must be installed in accordance with NZBC Acceptable Solution E2/AS1 and be overlaid with a flexible wall underlay. Proprietary systems shall be installed in accordance with the manufacturer's instructions. Particular attention must be paid to the installation of the wall underlay and sill and jamb tapes around window and door openings to ensure a continuous seal is achieved and all exposed wall framing in the opening is protected.

Cavity Batten Installation

17.2 The cavity battens must be installed over the wall underlay to the wall framing at maximum 300 mm horizontal centres where the studs are at 600 mm centres or at 400 mm centres when studs are at 400 mm centres.

17.3 Cavity battens are fixed in place with 40 x 2.5 mm hot-dip galvanised or stainless steel ring shank flat head nails at 300 mm centres when over studs or plates, and to the top and bottom plates and dwangs when between studs.

Shadowclad® Sheet Installation

17.4 Shadowclad® sheets may be cut on site by power or hand saw. Holes and cut-outs may be formed by using a hole saw.

17.5 Shadowclad® is envelope preservative treated. Where sheets are cut, all cuts must be coated with a brush on timber preservative specified in the Technical Literature for Shadowclad® Ventilated Cavity. Failure to correctly apply preservative to these areas may negatively affect the durability of the cut sheets.

17.6 Shadowclad® sheets must be dry prior to installation. Before the sheets are installed, cut edges must be sealed with a brush-on timber preservative. The bottom edges and back of the Shadowclad® sheets to a height of 150 mm must be primed or stain coated at ground level and where the sheets are installed above apron flashings on roofs.

17.7 Shadowclad® sheets must be installed starting at the bottom of the wall. The bottom of the Shadowclad® sheets must overhang the bottom plate by a minimum of 50 mm.

17.8 Before the Shadowclad® sheets are installed, the corner detail must be prepared to suit the selected option, e.g. external box angle or boxed corner. The necessary flashings must be installed before commencing sheet fixing.

Readers are advised to check the validity of this Appraisal by referring to the Valid Appraisals listing on the BRANZ website, or by contacting BRANZ.

KDC - Approved Building Consent Document - BC210608_SD_ISSUED - Pg 44 of 125 - 29/09/2021 - vsingh

17.9 The Shadowclad® sheets are fixed with 60 x 2.8 mm hot dip galvanised or ring shanked stainless steel flat head nails, or 8 gauge x 65 mm mechanically zinc plated or stainless steel wood screws at 150 mm centres around the edge of the sheets starting at the corners and at 300 mm centres in the body of the sheet. The fasteners must be no closer than 7 mm to the sheet edges, and on the rebated edge the fasteners must be inside the weather groove.

Aluminium Joinery Installation

17.10 Aluminium joinery and associated head flashings must be installed by the building contractor in accordance with the Technical Literature. A 7.5 – 10 mm nominal gap must be left between the joinery reveal and the wall framing so a PEF rod and air seal can be installed after the joinery has been secured in place.

Finishing

17.11 The coating manufacturer's instructions must be followed at all times for application of the paint or stain finish. Shadowclad® Sheets must be painted or stained as soon as practicable following fixing and must be clean and dry before commencing. If Shadowclad® sheets are exposed to the weather for more than 3 months, the surfaces must be washed with a mild detergent solution to remove any dirt, dust, mould or sea spray prior to coating. Allow the recommended drying time between coats and follow the temperature limitations for application. Carter Holt Harvey Plywood Limited does not recommend Shadowclad® be left uncoated when used as an exterior cladding.

17.12 The use of dark colours with an LRV of less than 50 and failure to adequately maintain the coating increases the risk of aesthetic related issues such as face checking. For this reason Carter Holt Harvey Plywood Limited does not support the use of dark colours on Shadowclad® exterior cladding.

17.13 Coatings should be applied by brush to ensure adequate coating film build is achieved. Application via roller or spray is not recommended.

Inspection

17.14 The Technical Literature must be referred to during the inspection of Shadowclad® Ventilated Cavity installations.

Health and Safety

18.1 Cutting of Shadowclad® sheets must be carried out in well ventilated areas and eye and hearing protection must be worn.

18.2 Safe use and handling procedures for the components that make up Shadowclad® Ventilated Cavity are provided in the relevant manufacturer's Technical Literature.

Basis of Appraisal

The following is a summary of the technical investigations carried out:

Tests

19.1 The following testing has been completed by BRANZ:

- BRANZ expert opinion on NZBC E2 code compliance for Shadowclad® Ventilated Cavity was based on testing and evaluation of all details within the scope and as stated within this Appraisal. Shadowclad® Ventilated Cavity details were tested to E2/VM1. The testing assessed the performance of the foundation detail, window head, jamb and sill details, vertical and horizontal Shadowclad® joints, internal and external corners. In addition to the weathertightness test, the details contained within the Technical Literature have been reviewed, and an opinion has been given by BRANZ technical experts that the system will meet the performance levels of Acceptable Solution E2/AS1 for cavity-based plywood claddings.
- Wind face load and fastener slip testing for Shadowclad® Ventilated Cavity. BRANZ determined design wind suction pressures, and by comparing these pressures with the NZS 3604 design wind speeds and AS/NZS 1170 pressure coefficients, the fixing requirements given in the Technical Literature were confirmed as suitable for timber framed walls.

Readers are advised to check the validity of this Appraisal by referring to the Valid Appraisals listing on the BRANZ website, or by contacting BRANZ.

KDC - Approved Building Consent Document - BC210608_SD_ISSUED - Pg 45 of 125 - 29/09/2021 - vsingh

Other Investigations

20.1 Structural and durability opinions have been provided by BRANZ technical experts.

20.2 The performance and testing of plywood wall cladding products in New Zealand and Australia has been considered, including the structural and weathertightness performance, durability and non-hazardous nature.

20.3 Site inspections have been carried out by BRANZ to examine the practicability of installation.

20.4 The Technical Literature for Shadowclad® Ventilated Cavity has been examined by BRANZ and found to be satisfactory.

Quality

21.1 The manufacture of Shadowclad® has been examined by BRANZ, including methods adopted for quality control. Details regarding the quality and composition of the materials used were obtained by BRANZ and found to be satisfactory.

21.2 The quality of materials, components and accessories supplied by Carter Holt Harvey Plywood Limited is the responsibility of Carter Holt Harvey Plywood Limited. The quality control system for the manufacture of Shadowclad® has been assessed and registered as meeting the requirements of AS/NZS 2269 by the Engineered Wood Products Association of Australasia, and ISO 9001 by Telarc SAI.

21.3 The treatment of Shadowclad® to H3.1 and 3.2 has been independently assessed and certified as meeting the requirements of AS/NZS 1604.3.

21.4 Quality of installation on site of components and accessories supplied by Carter Holt Harvey Plywood Limited and the building contractor is the responsibility of the installer.

21.5 Designers are responsible for the building design, and building contractors are responsible for the quality of installation of framing solutions and joinery, wall underlays, flashing tapes, cavity battens, airseals and Shadowclad® sheets in accordance with the instructions of Carter Holt Harvey Plywood Limited.

21.6 Building owners are responsible for the maintenance of Shadowclad® Ventilated Cavity in accordance with the instructions of Carter Holt Harvey Plywood Limited.

Sources of Information

- AS 3730: 2006 Guide to the properties of paints for buildings.
- AS/NZS 1170: 2002 Structural design actions.
- AS/NZS 1604.3: 2012 Specification for preservative treatment - Part 3: Plywood.
- AS/NZS 2269: 2012 Plywood - Structural.
- AS/NZS 4680: 2006 Hot-dip galvanized (zinc) coatings on fabricated ferrous articles.
- NZS 3602: 2003 Timber and wood-based products for use in building.
- NZS 3603: 1993 Timber Structures Standard.
- NZS 3604: 2011 Timber-framed buildings.
- NZS 4211: 2008 Specification for performance of windows.
- Acceptable Solutions and Verification Methods for New Zealand Building Code External Moisture Clause E2, Ministry of Business, Innovation and Employment, Third Edition July 2005 (Amendment 7, 01 January 2017).
- Ministry of Business, Innovation and Employment Record of amendments - Acceptable Solutions, Verification Methods and handbooks.
- The Building Regulations 1992.

Readers are advised to check the validity of this Appraisal by referring to the Valid Appraisals listing on the BRANZ website, or by contacting BRANZ.

KDC - Approved Building Consent Document - BC210608_SD_ISSUED - Pg 46 of 125 - 29/09/2021 - vsingh

Amendments

Amendment No.1, dated 5 September 2018.

This Appraisal has been amended to include the timber preservative treatment.

Amendment No. 2, dated 1 March 2021

This Appraisal has been amended to clarify coating requirements.

Readers are advised to check the validity of this Appraisal by referring to the Valid Appraisals listing on the BRANZ website, or by contacting BRANZ.

KDC - Approved Building Consent Document - BC210608_SD_ISSUED - Pg 47 of 125 - 29/09/2021 - vsingh

BRANZ

In the opinion of BRANZ, the Shadowclad® Ventilated Cavity Cladding System is fit for purpose and will comply with the Building Code to the extent specified in this Appraisal provided it is used, designed, installed and maintained as set out in this Appraisal.

The Appraisal is issued only to Carter Holt Harvey Plywood Limited, and is valid until further notice, subject to the Conditions of Appraisal.

Conditions of Appraisal

1. This Appraisal:
   a) relates only to the product as described herein;
   b) must be read, considered and used in full together with the Technical Literature;
   c) does not address any Legislation, Regulations, Codes or Standards, not specifically named herein;
   d) is copyright of BRANZ.
2. Carter Holt Harvey Plywood Limited:
   a) continues to have the product reviewed by BRANZ;
   b) shall notify BRANZ of any changes in product specification or quality assurance measures prior to the product being marketed;
   c) abides by the BRANZ Appraisals Services Terms and Conditions;
   d) warrants that the product and the manufacturing process for the product are maintained at or above the standards, levels and quality assessed and found satisfactory by BRANZ pursuant to BRANZ's Appraisal of the product.
3. BRANZ makes no representation or warranty as to:
   a) the nature of individual examples of, batches of, or individual installations of the product, including methods and workmanship;
   b) the presence or absence of any patent or similar rights subsisting in the product or any other product;
   c) any guarantee or warranty offered by Carter Holt Harvey Plywood Limited.
4. Any reference in this Appraisal to any other publication shall be read as a reference to the version of the publication specified in this Appraisal.
5. BRANZ provides no certification, guarantee, indemnity or warranty, to Carter Holt Harvey Plywood Limited or any third party.

For BRANZ

Chelydra Percy
Chief Executive

Date of Issue:
21 September 2017

Readers are advised to check the validity of this Appraisal by referring to the Valid Appraisals listing on the BRANZ website, or by contacting BRANZ.

shadowclad®

SHADOWCLAD® STRUCTURAL Natural GROOVE | SHADOWCLAD® STRUCTURAL Natural TEXTURE | SHADOWCLAD® STRUCTURAL Ultra GROOVE | SHADOWCLAD® STRUCTURAL Ultra TEXTURE | SHADOWCLAD® FLASHINGS

KDC - Approved Building Consent Document - BC210608_SD_ISSUED - Pg 48 of 125 - 29/09/2021 - vsingh

SHADOWCLAD® SPECIFICATION & INSTALLATION GUIDE

FOR CAVITY CONSTRUCTION

MARCH 2021



CHH PLY

Information contained within is specific to Shadowclad® structural plywood products and must not be used with any other plywood products, no matter how similar they may appear.

KDC - Approved Building Consent Document - B0210608_SD_ISSUED - Pg 49 of 125 - 29/09/2021 - vsingh

shadowclad®

CAVITY CONSTRUCTION

Contents

1.0 Shadowclad® Product Range ... 3
1.1 Technical Information & CAD Details ... 4
1.2 Product Description & Range ... 4
1.3 Building Materials for Use with Shadowclad (Exterior Cladding) ... 10
1.4 Preservative Treatment ... 10
1.5 Sustainability ... 11
1.6 Product Identification ... 11
2.0 Design Considerations ... 11
2.1 Design Responsibility ... 11
2.2 Literature Scope ... 11
2.3 Code Compliance ... 11
2.4 Site & Foundations ... 11
2.5 Ground Clearances ... 12
2.6 Moisture Management ... 12
2.7 Wind Loading ... 12
2.8 Durability ... 12
2.9 Textured vs. Smooth Finished Plywood as Exterior Cladding ... 12
2.10 Health & Safety ... 13
2.11 Storage & Handling ... 13
3.0 Interior Linings ... 13
4.0 Installation – Exterior Cladding ... 14
4.1 Framing – Durability ... 14
4.2 Framing – Construction ... 14
4.3 Preparation – Building Underlay & Rigid Air Barrier ... 14
4.4 Preparation – Cavity Construction ... 14
4.5 Sheet Layout ... 17
4.6 Fixings – Fastener Durability ... 17
4.7 Fixings – Fastener Size & Layout ... 17
4.8 Installation Tools for Shadowclad ... 18
4.9 Shadowclad Key Installation & Design Points ... 19
4.10 Vertical Sheet Joints ... 20
4.11 Horizontal Sheet Joints ... 23
4.12 External Corners ... 25
4.13 Internal Corners ... 26
4.14 Shadowclad Flashing Junction Points ... 27
4.15 Window Penetrations ... 29
4.16 Wall Penetrations ... 32
4.17 Sheet Clearances ... 36
4.18 Other Details ... 39
5.0 Coating & Application – Exterior Cladding ... 45
5.1 Surface Preparation ... 45
5.2 Coating Application ... 45
5.3 Coating Selection ... 45
5.4 Coating Requirements if Run off is Used for Drinking Water ... 46
6.0 Maintenance ... 47
7.0 Frequently Asked Questions ... 48
8.0 Glossary of Terms ... 48
9.0 References & Sources of Information ... 49
10.0 Limitations ... 49
11.0 Shadowclad Stick User Guide ... 50



CHH PLY

KDC - Approved Building Consent Document - BC210608_SD_ISSUED - Pg 50 of 125 - 29/09/2021 - vsingh

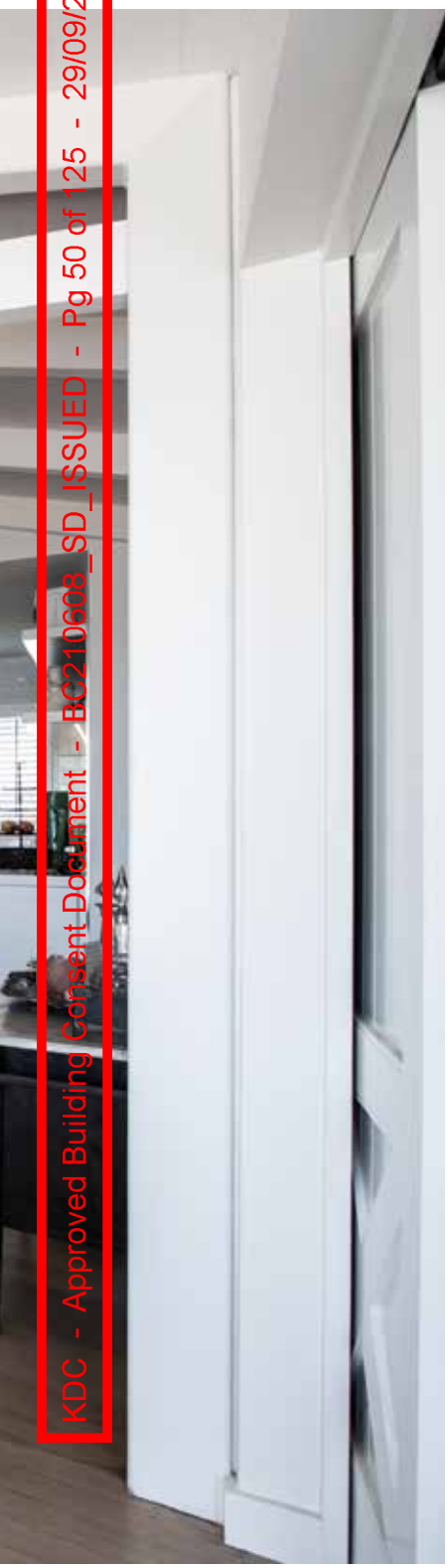

1.0 SHADOWCLAD® PRODUCT RANGE

Manufactured in New Zealand by Carter Holt Harvey Plywood (CHH Ply), Shadowclad® panels are suitable for use as an exterior wall cladding when using H3 treated panels or as an internal wall or ceiling lining when using untreated panels.

Shadowclad is manufactured under a third party audited quality control programme to monitor compliance with AS/NZS 2269 Plywood Structural. All Shadowclad products carry Engineered Wood Products Association of Australasia (EWPAA) Joint Accreditation System – Australia and New Zealand (EWPAA/JAS-ANZ) certification.

Shadowclad has been BRANZ appraised as a cladding material for cavity wall construction. To view the BRANZ Appraisal No. 764 (2017) visit www.shadowclad.co.nz.

For specific information regarding the use of Shadowclad with weatherboard, solid plaster or brick vertical junctions refer to the Shadowclad Specification and Installation Guide for mixed cladding systems on cavity construction.

Our other plywood products:

- For specific information on plywood as a rigid air barrier, and/or bracing, refer to the current Ecoply® Barrier Specification and Installation Guide.
- For information relating to Ecoply structural plywood and applications other than exterior cladding, refer to the current Ecoply Specification and Installation Guide.

These are all available for download from www.chhply.co.nz.

The Shadowclad for cavity construction BRANZ Appraisal No. 764 (2017) does not cover:

- Shadowclad used as an interior lining.
- Handiply® Utilityclad™ plywood products.
- Shadowclad in direct fix cladding applications.

Shadowclad products must be competently installed in accordance with good building practices and sound design principles to satisfy the requirements of the Building Act 2004, the New Zealand Building Code (NZBC), and applicable New Zealand Standards. This is the responsibility of building owners and the design professionals and builders that they engage. This Shadowclad Specification and installation guide for cavity construction contains information, limitations, and cautions regarding the properties, handling, installation, usage, and the maintenance of Shadowclad products. However, to the maximum extent permitted by law, CHH Ply assumes no legal liability to you in relation to this information.

The information contained in this document is current as at March 2021. It is your responsibility to ensure you have the most up to date information available.

The information contained in this publication relates specifically to Shadowclad structural plywood products manufactured by CHH Ply and must not be used with any other plywood manufacturer's products no matter how similar they may appear.

Alternative plywood products can differ in a number of ways which may not be immediately obvious and substituting them for Shadowclad structural plywood products is not appropriate, and could in extreme cases lead to premature failure and/or buildings which do not meet the requirements of the NZBC.

KDC - Approved Building Consent Document - BC210608_SD_ISSUED - Pg 51 of 125 - 29/09/2021 - vsingh

1.1 TECHNICAL INFORMATION & CAD DETAILS

When specifying or installing any Shadowclad product visit www.shadowclad.co.nz or call 0800 326 759 to ensure you have current specification material and any relevant technical notes.

For buildings containing mixed cladding solutions with Shadowclad refer Shadowclad Specification and Installation Guide for mixed cladding systems on cavity construction.

Having trouble installing Shadowclad? Visit www.shadowclad.co.nz or download the Shadowclad APP to view the installation animations of common Shadowclad junctions.

1.2 PRODUCT DESCRIPTION & RANGE

Shadowclad structural plywood panels are manufactured from radiata pine wood veneers. The veneers are placed at right angles to each other for maximum strength and stability then bonded together with synthetic phenolic (PF) resin to form a strong and permanent Type A bond.

Shadowclad is available in panel sizes 2440/2745 x 1216mm (to provide 1200mm cover) and features a unique textured (bandsawn) appearance which also helps to diffuse UV rays for increased aesthetic performance when exposed to weather.

Shadowclad is available as a Textured or Grooved profile and in either Natural or Ultra finishes. The Selection, application and maintenance of coatings is the responsibility of the building owners and the professionals that they engage. For advice on specific coating systems and their suitability for use with Shadowclad Natural or Shadowclad Ultra, always refer to the coating manufacturer.

Shadowclad Natural

Shadowclad Natural is an uncoated panel suitable for use with penetrating stains, film forming stains and paint systems. If Shadowclad is left uncoated or is clear coated in exterior applications the long term aesthetics of the board will be significantly reduced. While the product will meet NZBC Clauses B2 and E2 durability and weather tightness requirements for cladding, a high visual appearance will not be achieved in the long term.

Shadowclad Ultra

Shadowclad Ultra features a factory applied exterior grade performance coating suitable for use with most paint and film forming stain systems. Using a unique powder coating process on the panel face and edges means Ultra panels can be immediately top coated on site, eliminating (in most cases) the need for expensive and time consuming wet primers.

CHH Ply recommends the use of Shadowclad Ultra where suitable paint or film forming stains are being used.

Shadowclad Ultra features:

- High 60-80 microns film build, can be up to 2-3 times thicker than traditional wet primers.
- Continuous powder coated surface forms an effective moisture barrier for a drier more consistent painting surface.
- Saves time and money as traditional wet primers are not normally required.
- Panel surface, edges and bottom 150mm of sheet factory coated for increased panel durability.
- Once installed Shadowclad Ultra can be exposed to weather for up to 3 months prior to application of finishing coats.
- Low volatile organic compound (VOC) primer coating.

Shadowclad Ultra is available H3 treated for use as an exterior cladding. It is available H3.1 LOSP treated for residential and commercial applications or H3.2 CCA if required. H3.2 CCA treatment is only available in the Ultra finish and is not available with Natural finish products.

Shadowclad Ultra is not suitable for use with penetrating stains.

Table 1: Surface Finishes

Natural		**Ultra**	
Texture	Groove	Texture	Groove
			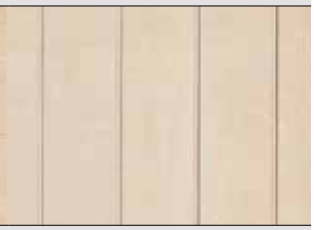
Shadowclad Natural is an uncoated panel suitable for staining and painting. Untreated panels can be clear coated for internal, dry applications.		Shadowclad Ultra features a performance coated surface ready for top coating saving time and money when using paints and film forming stains. It is suitable for use in exterior applications only.	

KDC - Approved Building Consent Document - BC210608_SD_ISSUED - Pg 52 of 125 - 29/09/2021 - vsingh

Table 2: Shadowclad Product Range

	Texture	Groove
Finish	Natural or Ultra	Natural or Ultra
Sheet Length	2440 and 2745mm	2440 and 2745mm
Width (Overall)	1216mm	1216mm
Width (Effective)	1200mm	1200mm
Cover/Width Tolerance	+/– 1mm	+/– 1mm
Nominal Thickness	12mm	12mm
Weight (kg/m²)	6.6	6.6
R-value (m².C/W)	0.104	0.104
Groove Profile	N/A	9mm wide, 5mm deep at 150mm centres
Edge Profile	Ship lap with weather groove	Ship lap with weather groove
Treatment Available	• H3.1 LOSP (Azole) • H3.2 CCA (Ultra finish only) • Untreated – internal dry applications (Natural finish only)	• H3.1 LOSP (Azole) • H3.2 CCA (Ultra finish only) • Untreated – internal dry applications (Natural finish only)

Shadowclad Exterior Flashing Range

Manufactured from extruded aluminium or folded from 0.5mm thick G304 stainless steel, the Shadowclad flashings range is purpose designed to complement Shadowclad panels used in exterior applications.

Independently tested for weathertightness and compliant with Table 20 of E2/AS1, Shadowclad flashings achieve 50 year durability in all NZS 3604 exposure zones including zone D (sea spray).

Note: Stainless steel fasteners should not have contact with or pierce aluminium flashings. Where stainless steel fasteners are to pierce flashings stainless steel flashings should be used.

The range includes internal and external angles, Horizontal and inter-storey 'Z' flashings and a cavity base closure.

Aluminium horizontally installed flashings come in 3600mm lengths and vertically installed angles are available in 3000mm and 6000mm lengths - refer Table 4. Stainless Steel flashings are available in 3000mm lengths - refer Table 5.

The information, details and performance statements provided in this guide are based on Shadowclad plywood panels and Shadowclad flashings being used together as a system.
CHH Ply does not recommend that Shadowclad plywood panels be installed with non-CHH Ply flashings. Flashings not supplied by CHH Ply must, as a minimum, comply with E2/AS1 specifications and be compatible for use with H3.1 LOSP or H3.2 CCA treated plywood. It is the Designer's responsibility to ensure that any non-CHH Ply flashings are fit for purpose and compatible with Shadowclad products and any other building materials or components of the exterior wall.

Aluminium Flashing Finishes

Shadowclad aluminium flashings are available in either natural anodised finish (silver colour) or in mill finish for powder coating.

Exterior Flashings & H3.2 CCA Treated Shadowclad

Exposure Zone B & C

H3.2 CCA treated Shadowclad in exposure zones B and C (where flashings are exposed to weather) must use mill finished flashings which must be powder coated to the desired colour or use stainless steel flashings.

H3.2 CCA treatment contains copper. As such, some form of isolation between aluminium flashings and H3.2 CCA treated panels such as powder coating of the flashings is required. Refer to Table 21 "Compatibility of Materials in Contact" in E2/AS1 for more information.

Exposure Zone D (Sea Spray)

In exposure zone D (sea spray) flashings exposed to weather must be stainless steel for H3.2 CCA treated Shadowclad.

H3.2 CCA Treated Shadowclad

Uncoated aluminium flashings are not permitted to be in direct contact in any zone with H3.2 CCA treated Shadowclad under any circumstances.

Table 3: Flashing Durability for Shadowclad

Sheet Finish	Treatment	Exposure Zone (refer to section 4 of NZS 3604)	Flashing Material/Finish required
Shadowclad Natural/Ultra	H3.1 LOSP	Zones B and C	Aluminium Anodised, or Stainless Steel
		Zone D (Sea spray)	Stainless Steel*
Shadowclad Ultra	H3.2 CCA	Zones B and C	Stainless Steel#
		Zone D (Sea spray)	Stainless Steel

* Aluminium Powder Coated flashings may be used in Exposure Zone D where they are not pierced by Stainless Steel fasteners. Where stainless steel fasteners are to pierce flashings stainless steel flashings should be used.
# Aluminium Powder Coated flashings may be used in Exposure Zones B and C where they are not pierced by Stainless Steel fasteners. Where stainless steel fasteners are to pierce flashings stainless steel flashings should be used.

KDC - Approved Building Consent Document - BC210608_SD_ISSUED - Pg 53 of 125 - 29/09/2021 - vsingh

Table 4 **Aluminium** **Shadowclad Flashings Range**

Flashing	Line Drawing	Description	Finish Available	Length (mm)
Internal 90° Angle	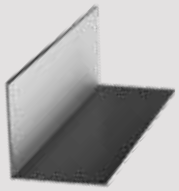	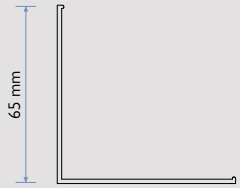	Back flashing for internal corners	Natural Anodised	3000 or 6000
Internal 'W' Angle	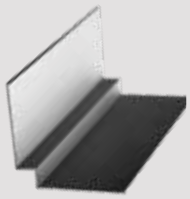	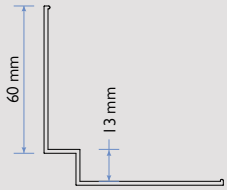	'W' back flashing for internal corners providing a flush finish with panels (13mm x 13mm)	Natural Anodised or Mill	3000 or 6000
Large Internal 'W' Angle	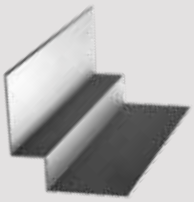	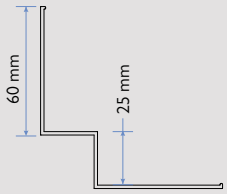	'W' back flashing for internal corners (25mm x 25mm) **Design Tip:** Use a Large 'W' where a flush junction between the Horizontal 'Z' flashing and corner flashing is desired	Natural Anodised or Mill	3000 or 6000
External Box Angle	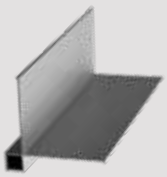	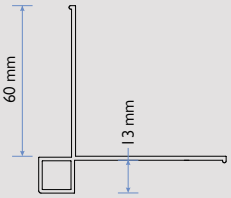	Box corner for external corners providing a flush finish with panels	Natural Anodised or Mill	3000 or 6000
Large External Box Angle	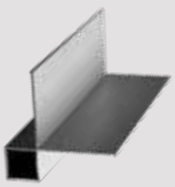	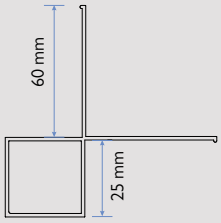	Box corner for external corners (25mm x 25mm) **Design Tip:** Use Large External Box where a flush junction between the Horizontal 'Z' flashing and corner flashing is desired	Natural Anodised or Mill	3000 or 6000
Vertical Top Hat	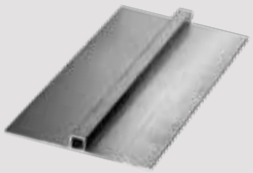	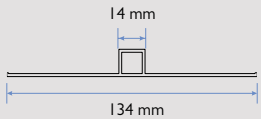	Vertical sheet joint flashing	Natural Anodised or Mill	3000 or 6000
Cavity Base Closure	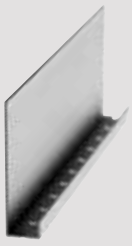	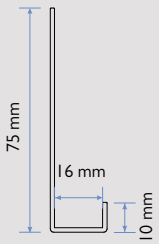	Restricts vermin from accessing the cavity space	Natural Anodised	3600

KDC - Approved Building Consent Document - BC210608_SD_ISSUED - Pg 54 of 125 - 29/09/2021 - vsingh

Table 4 Aluminium Shadowclad Flashings Range

Flashing	Line Drawing	Description	Finish Available	Length (mm)
Horizontal 'Z' Flashing	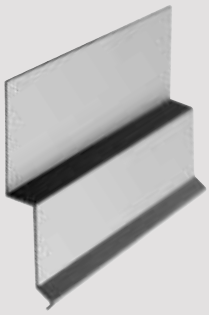 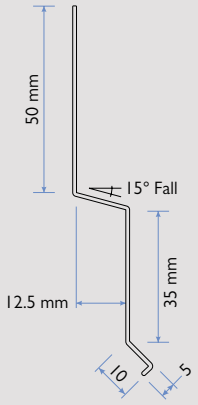	Horizontal 'Z' flashing for horizontal joints between panels	Natural Anodised or Mill	3600
Inter-Storey 'Z' Flashing	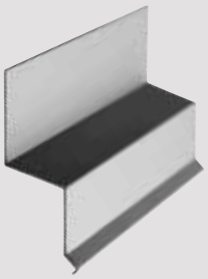 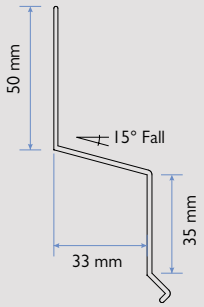	Horizontal 'Z' flashing for horizontal joints between panels when limiting continuous cavities to a height of two storeys or 7 metres	Natural Anodised or Mill	3600
Horizontal 'Z' Back Flashing	 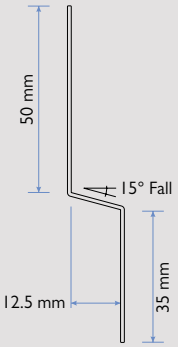	Back flashing for junction of butt jointed Horizontal 'Z' flashing	Mill	300
Inter-storey 'Z' Back Flashing	 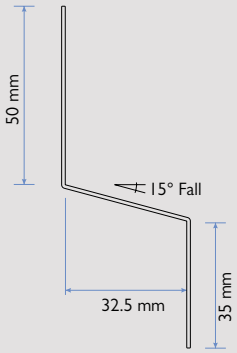	Back flashing for junction of butt joint 'Z' Flashing inter-storey	Mill	300

KDC - Approved Building Consent Document - BC210608_SD_ISSUED - Pg 55 of 125 - 29/09/2021 - vsingh

Table 5 **Stainless Steel** **Shadowclad Flashings Range**

	Flashing	Line Drawing	Description	Finish Available	Length (mm)
Internal 90° Angle		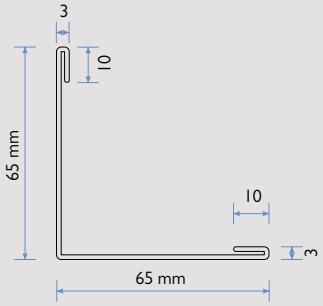	Back flashing for internal corners	Stainless Steel	3000
Large Internal 'W' Angle	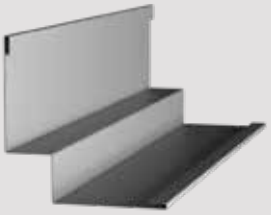	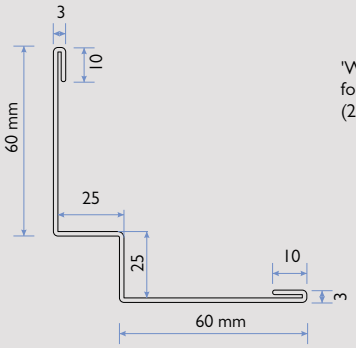	'W' back flashing for internal corners (25mm x 25mm)	Stainless Steel	3000
Large External Box Angle		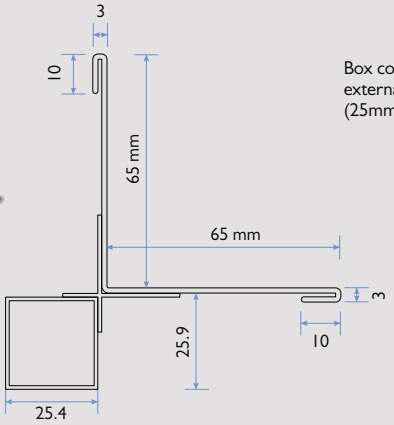	Box corner for external corners (25mm x 25mm)	Stainless Steel	3000
Cavity Base Closure		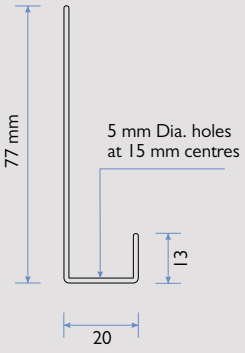	Restricts vermin from accessing the cavity space	Stainless Steel	3000

KDC - Approved Building Consent Document - BC210608_SD_ISSUED - Pg 56 of 125 - 29/09/2021 - vsingh

Table 5 Stainless Steel Shadowclad Flashings Range

Flashing	Line Drawing	Description	Finish Available	Length (mm)
Horizontal 'Z' Flashing	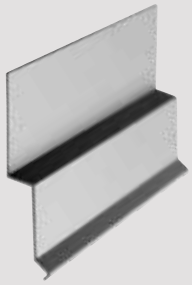 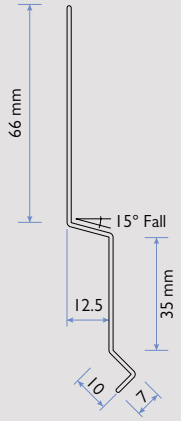	Horizontal 'Z' flashing for horizontal joints between panels	Stainless Steel	3000
Inter-Storey 'Z' Flashing	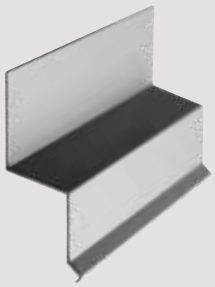 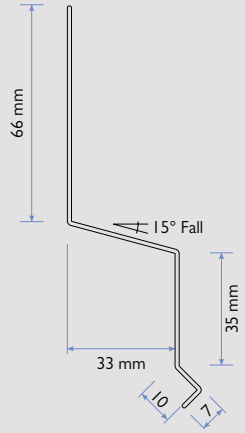	Horizontal 'Z' flashing for horizontal joints between panels when limiting continuous cavities to a height of two storeys or 7 metres	Stainless Steel	3000

KDC - Approved Building Consent Document - BC210608 - SD ISSUED - Pg 57 of 125 - 29/09/2021 - vsingh

1.3 BUILDING MATERIALS FOR USE WITH SHADOWCLAD (EXTERIOR CLADDING)

Table 6: Materials Available from CHH Ply

	Description	Treatment	Size/Length
Frame Flashing Tape[1]	For a secure and permanent seal of all Ecoply Barrier openings (Use in conjunction with Sill Tape)	-	150mm/200mm x 30m
Sealing Tape[1]	For a secure and permanent seal of all Ecoply Barrier vertical joints	-	60mm x 30m
Sill Tape[1]	One piece stretchable sill tape for window and door sills. 2 rolls per box	-	150mm/200mm x 20m
Ecoply® Barrier[1]	Rigid Air Barrier System	H3.2 CCA	2440mm/2745mm x 1200mm
Cavity Batten	45 x 20mm (nominal)	H3.1 LOSP	Random
Flashings	Aluminium and stainless steel flashings range	Refer Tables 4 and 5	Refer Tables 4 and 5

1. Please refer to the Ecoply Barrier Specification and Installation Guide for more information.

Building Materials Supplied by Other Manufacturers

- Fasteners (i.e. nails or screws) in accordance with Table 9: Fastener Lengths for Shadowclad fixing.
- Building underlay compliant with Table 23 of E2/AS1.
- Window/door head flashings supplied by window joinery company.
- Paint in accordance with paint manufacturer's recommendations (refer to 5.3 Coating Selection for more details).

1.4 PRESERVATIVE TREATMENT

Shadowclad is available either H3 treated for use as an exterior cladding or untreated (Natural finish products only) for interior wall and ceiling linings. H3 treated Shadowclad is treated in accordance with AS/NZS 1604.3 with the standard treatment for Shadowclad panels being H3.1 LOSP (Azole). H3.2 CCA treatment is available for Shadowclad Ultra panels if required.

Shadowclad is envelope preservative treated. Where sheets are cut, cuts must be coated with a brush on timber preservative in accordance with the relevant manufacturer's instructions. Soudal® Metalex® Concentrated Timber Preservative Clear (Soudal® Metalex® Clear) is recommended. Failure to properly apply preservative to cut edges will negatively affect the durability of the cut panels.

H3.1 LOSP Treatment

H3.1 LOSP treatment is the standard treatment for Shadowclad panels as it does not discolour the panel surface and does not use water in the treatment process allowing panels to remain at uniform dimensions.

When coating H3.1 LOSP treated plywood some residual solvent may be present on the sheet surface from the treatment process. Sheets feeling greasy to touch should be placed in a well ventilated area and allowed to flash off to ensure proper adhesion of paints and stains to the sheet surface.

Mechanical fasteners are required to fix H3.1 LOSP treated Shadowclad to framing. Do not glue Shadowclad to frames.

H3.2 CCA Treatment

H3.2 CCA uses water during the treatment process and may leave panel surfaces with a slight green colour. For this reason H3.2 CCA treatment is available only in the Shadowclad Ultra finish.

Table 7: Preservative Treatment Options

	Untreated	H3.1 LOSP (Azole)	H3.2 CCA
Preservative Carrier	N/A	Light organic oil (white spirits)	Water
Colour	Natural	Natural	Green
Fungicide	Heat treated dry wood	Propiconazole and Tebuconazole	Copper
Insecticide	Heat treated dry wood	Permethrin	Arsenate
Other Chemicals	N/A	Butyl Oxitol (co-solvent to assist active stability)	Chrome (to fix preservative in water)
Mouldicide	N/A	IPBC	Copper (limited efficiency)
Notes	Plywood for dry interior use, supplied ex mill at <15% moisture content	Solvent does not affect dimensions. Solvent smell disappears when exposed to air flow	Dried after treatment to average 18% moisture content
Applications (Refer NZS3602)	Interior dry protected	Exterior (service performance subject to detailing and coatings used)	Exterior (service performance subject to detailing and coatings used)

KDC - Approved Building Consent Document - BC210608_SD_ISSUED - Pg 58 of 125 - 29/09/2021 - vsingh

1.5 SUSTAINABILITY

Shadowclad is manufactured from radiata pine. It is grown on tree farms which are tended and harvested to provide wood for plywood manufacture. The crop is managed on a sustainable basis to yield millable trees. New Zealand plantations are managed in compliance with the New Zealand Forest Accord.

Shadowclad is manufactured in New Zealand at CHH Ply Tokoroa plywood mill.

Shadowclad is available Forestry Stewardship Council (FSC) (FSC-C012019) certified upon request.

1.6 PRODUCT IDENTIFICATION

In accordance with AS/NZS 2269, every sheet of Shadowclad plywood has the following information marked on the back:

- Brand name: e.g. SHADOWCLAD®.
- Intended application: e.g. STRUCTURAL.
- Glue bond: e.g.. A BOND.
- Formaldehyde emission class: e.g. E0.
- Australasian Standard: e.g. AS/NZS 2269:2012.
- Treatment Standard (if applicable) e.g. AS/NZS 1604.3:2012.
- Date and time of manufacture: e.g. 01/12/15 12:34:56.
- The Engineered Wood Products Association of Australasia (EWPAA) brand and mill number: e.g. 911 (Tokoroa mill).

Treated Example

SHADOWCLAD® STRUCTURAL A
BOND E0 AS/NZS 2269.0:2012
AS/NZS 1604.3:2012 400 64 H3 E LOSP
RETREAT CUTS PAT 01/12/15 12:23:45
911

2.0 DESIGN CONSIDERATIONS

2.1 DESIGN RESPONSIBILITY

Design responsibility lies with the building owner and the professionals that they engage. The specifier for the project must ensure that the details in the specification for their individual projects are appropriate for the intended application. The specifier must also ensure that additional detailing is provided for specific design or any areas that fall outside the scope and specifications of this literature. It is the specifier's responsibility to ensure that non-CHH Ply products are fit for purpose, and compatible with Shadowclad products.

Good detailing which avoids moisture or dust accumulation on the sheet surface can help increase durability and aesthetics. Roof overhangs contribute to performance as they offer shade and will protect walls from rain and dust. Trims should be bevelled to shed moisture and flashings should be detailed with gaps that do not trap water at the panel edges.

2.2 LITERATURE SCOPE

Shadowclad can be used for those structures which fall within the scope of Acceptable Solution E2/AS1- External Moisture. Shadowclad is recommended for a drained and ventilated cavity, where the cladding is fixed onto timber battens fixed over the timber frame and building underlay.

Shadowclad is not recommended where a risk score >20 in accordance with E2/AS1 is established.

2.3 CODE COMPLIANCE

Shadowclad on a cavity wall system is tested in accordance with E2/VM1 and AS/NZS 4284 "Testing of Building Facades" for compliance with the NZBC Clause E2 - External Moisture.

2.4 SITE & FOUNDATIONS

The site on which the building is situated must comply with the Acceptable Solution E1/AS1 of the Approved Document for the NZBC Clause E1 - Surface Water.

KDC - Approved Building Consent Document - BC210608 - SD ISSUED - Pg 59 of 125 - 29/09/2021 - vsingh

2.5 GROUND CLEARANCES

The bottom edge of each Shadowclad sheet must be a minimum of 50mm above decks and verandahs, 100mm above paved ground and a minimum of 175mm above unprotected ground.

Shadowclad must overhang the bottom plate on a concrete slab by a minimum of 50mm as required by NZS 3604 and E2 - External Moisture. Maximum distance from the bottom of the sheet to the fixing shall not exceed 75mm.

For garage door openings, refer Paragraph 9 "Openings to garages" in Acceptable Solution E2/AS1.

2.6 MOISTURE MANAGEMENT

It is the responsibility of the specifier to identify moisture related risks associated with any particular building design and site exposure.

Wall construction design must effectively manage moisture, accounting for both the interior and exterior environments of the building. This is particularly important in buildings that have a higher risk of wind driven rain penetration or that are artificially heated or cooled.

Where a deck is attached to the building and the Shadowclad extends below the deck to cover the framing, keep decking clear of the Shadowclad surface and detail to avoid moisture entrapment.

All wall openings, penetrations, junctions, connections, window sills, heads and jambs must incorporate Shadowclad flashings for waterproofing. Materials, components and the installation used to manage moisture in framed wall construction must, at a minimum, comply with the requirements of the NZBC.

2.7 WIND LOADING

Shadowclad is suitable for use in all wind zones up to and including extra high (55m/s) as defined by NZS 3604 and specific design wind pressures up to design differential ultimate limit state (ULS) of 2.5kPa.

2.8 DURABILITY

The durability level applicable to Shadowclad is dependent upon the application and coating applied. Detailing, treatment and installation methods need careful consideration to satisfy the requirements of the NZBC.

Exterior Cladding – 15 Year Durability

CHH Ply does not recommend Shadowclad is left uncoated when used as an exterior cladding.

The NZBC Clause B2 requires claddings to achieve a minimum structural durability level of 15 years.

Shadowclad coated with stains or paints (regardless of colour choice) will meet this requirement. However, if using dark colours (colours with an LRV of less than 50%) homeowners should expect an increased level of coating maintenance over the life of the cladding than would normally be expected where lighter colours are used.

Using dark colours with an LRV of less than 50% and failure to adequately maintain the surface coating of the cladding increases the risk of aesthetic related issues such as face checking. For this reason, CHH Ply does not support the use of dark colours on Shadowclad exterior cladding.

Additional Notes:
For further advice on coatings refer to section 5.0: Coating and Application – Exterior Cladding.

2.9 TEXTURED VS. SMOOTH FINISHED PLYWOOD AS EXTERIOR CLADDING

Structurally, some smooth faced plywood products may meet the requirements of E2/AS1 however in CHH Ply opinion smooth faced plywood does not retain a high visual appearance when directly exposed to weathering.

Where a high visual appearance is desired (such as exterior cladding) CHH Ply recommends the use of Shadowclad rather than smooth faced plywood.

Shadowclad features a textured (bandsawn) face which reduces the visibility of natural face checking which can occur in any wood based product which has been exposed to weather for a prolonged period.

Face checks are not considered a manufacturing fault as they are part of a natural process and are merely an indication that it is time to re-apply the surface coating on the product.

KDC - Approved Building Consent Document - BC210608_SD_ISSUED - Pg 60 of 125 - 29/09/2021 - vsingh

2.10 HEALTH & SAFETY

Shadowclad should be installed and used as per the Safety Data Sheet (SDS) which can be downloaded from www.shadowclad.co.nz.

Always wear safety glasses or non-fogging goggles when cutting Shadowclad panels and flashings.

If wood dust exposures are not controlled when machining (sawing, routing, planing, drilling etc.) a class P1 or P2 replaceable filter or disposable face piece respirator should be worn.

Wear comfortable work gloves to avoid skin irritation and the risk of splinters. Wash hands with mild soap and water after handling panels.

2.11 STORAGE & HANDLING

Shadowclad Panels:

- Keep Shadowclad® panels dry.
- Store under cover.
- Handle and stack with care to avoid damage.
- Stack flat; clear of ground, on at least three evenly spaced bearers.
- Store in well-ventilated areas away from sources of heat, flames or sparks.

Shadowclad Flashings:

- Keep dry. Should a shipment of Shadowclad flashings arrive in a wet condition, they should be immediately dried before storing.
- When storing flashings avoid contact with other metals which may cause scratches or marks. The use of shelving or racks faced with dry wood is recommended.
- Keep away from caustics, nitrates and acids.

3.0 INTERIOR LININGS

The use of untreated plywood is acceptable under NZS 3604, NZBC for internal wall and ceiling linings where NZS 3602 allows the use of untreated plywood.

For detailed installation advice for plywood used as an internal lining refer to www.chhply.co.nz.

KDC - Approved Building Consent Document - BC210608_SD_ISSUED - Pg 61 of 125 - 29/09/2021 - vsingh

4.0 INSTALLATION – EXTERIOR CLADDING

4.1 FRAMING – DURABILITY

Refer to NZBC Acceptable Solution B2/AS1 "Durability". External timber framing must be treated to a minimum H1.2 treatment. For timber treatment and allowable moisture content, refer to NZS 3602 as well as framing manufacturer's literature (e.g. Laserframe®). The current Laserframe Product Guide can be downloaded from www.chhwoodproducts.co.nz.

4.2 FRAMING – CONSTRUCTION

Use kiln dried framing such as Laserframe in accordance with timber framing manufacturer's specifications and treated in accordance with NZS 3602. The current Laserframe Product Guide can be downloaded from www.chhwoodproducts.co.nz.

Timber frame sizes and set out must comply with NZS 3604 (or specifically designed to NZS 3603) and with stud and nog centres and timber width required by this specification.

All Shadowclad sheet edges must be fully supported by framing.

- Studs must not exceed 600mm centres.
- Nogs must be provided at a maximum of 800mm centres.
  - When using vertical cover battens nogs at maximum 600 centres.
- An extra stud is required at internal corners for ventilated cavities.
- Refer to NZS 3602 for moisture content requirements as a guide, frame and cavity batten moisture content should be no greater than 20%.
- Framing must be kept as dry as possible at all times.
- Single spans of Shadowclad should not exceed 600mm (e.g. below windows or balustrades).

4.3 PREPARATION – BUILDING UNDERLAY & RIGID AIR BARRIER

The use of building underlay compliant with Table 23 of E2/AS1 or an alternative solution rigid air barrier must be provided over framing prior to the installation of exterior cladding.

- Barriers to air flow are required.
- Rigid air barriers are required in extra high wind zones and above.
- Rigid air barriers are also required in high wind zones and above for Ministry of Education school properties.

For more information on rigid air barriers refer to the current Ecoply Barrier Specification and Installation Guide which can be downloaded from www.ecoplybarrier.co.nz.

4.4 PREPARATION – CAVITY CONSTRUCTION

Cavity Construction

A Shadowclad cavity base closure must be installed at the bottom of all walls and above window heads, this provides vermin proofing to ventilation openings. The holes in the cavity base closure must be kept clear to enable ongoing drainage and ventilation of the cavity.

Cavity Battens

Cavity battens provide an air space between the frame and the sheet and are considered a "packer" when installed in accordance with Acceptable Solution E2/AS1.

The battens must be fixed over the building underlay or a rigid air barrier.

All timber battens must: be nominal 20mm thick (between limits of 18mm and 25mm in thickness); at least the same width as the stud; and minimum H3.1 LOSP treated in accordance with NZS 3640.

Polystyrene battens **must not** be used with H3.1 LOSP treated Shadowclad panels, as they may melt in contact with solvents.

Battens must be fixed over the building underlay/rigid air barrier to all studs, as follows.

If studs are at 600mm centres:

- Battens must be fixed vertically at 300mm centres (i.e. a batten on studs and one in between the two studs fixed to top and bottom plates and nogs).
- Battens fixed to studs are to support Shadowclad and restrain building underlay and insulation from bulging into the cavity.
- The Shadowclad must not be fixed to these cavity battens where there is no framing behind them.

If studs are at 400mm centres battens may be fixed on studs only.

Horizontal battens must be used at the top of the wall to block the top of the cavity from venting into the roof space.

Cavity spacers (i.e. short pieces of cavity batten) may be used to support the bottom sheet edge (or provide intermediate support where required e.g. above window openings) but must allow water drainage to the outside. The cavity spacers must be fixed at a 5° minimum slope with a 50mm minimum air gap at either side.

KDC - Approved Building Consent Document - BC210608_SD_ISSUED - Pg 62 of 125 - 29/09/2021 - vsingh

SC001: Typical Framing Setout (without Battens) Studs at 600 Centres

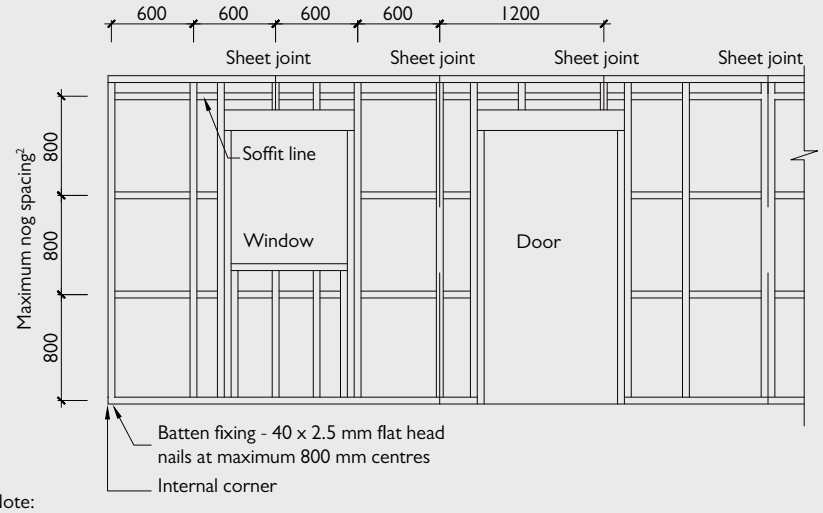

Note:
1. Single spans of Shadowclad® must not exceed 600 mm (e.g. below windows or on balustrades)
2. When using vertical cover battens, nogs at maximum 600 centres

SC001A: Typical Framing Setout (without Battens) Studs at 400 Centres

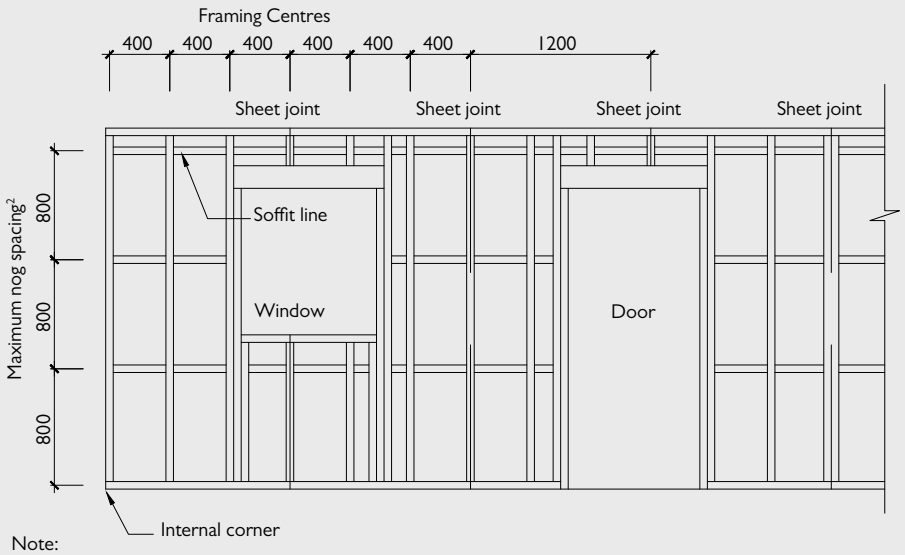

Note:
1. Single spans of Shadowclad must not exceed 600 mm (e.g. below windows or on balustrades)
2. When using vertical cover battens, nogs at maximum 600 centres

KDC - Approved Building Consent Document - BC210608_SD_ISSUED - Pg 63 of 125 - 29/09/2021 - vsingh

SC002: Typical Framing Setout (with Battens) Studs at 600 Centres

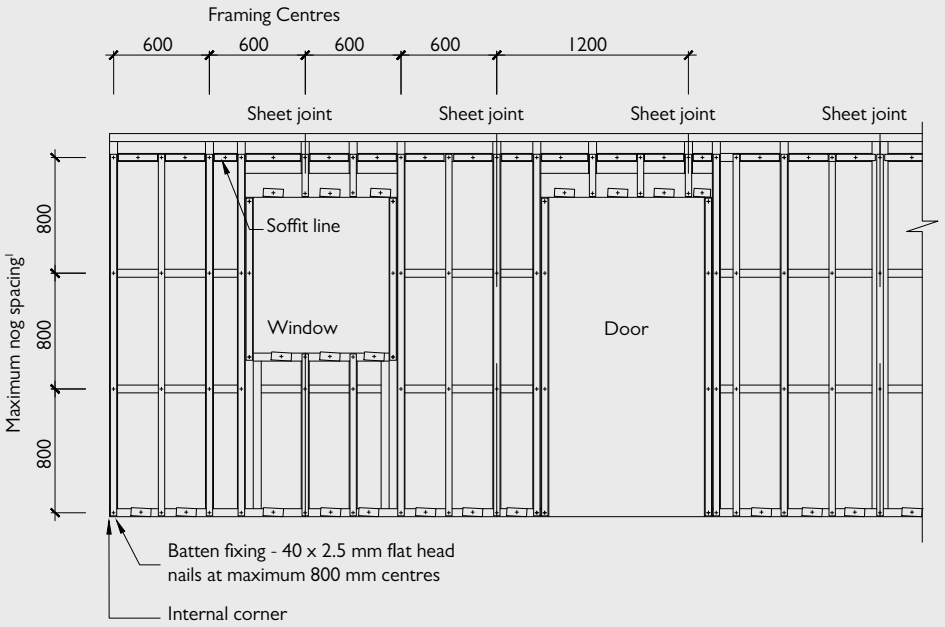

Note:
1. When using vertical cover battens nogs at maximum 600 centres

SC002A: Typical Framing Setout (with Battens) Studs at 400 Centres

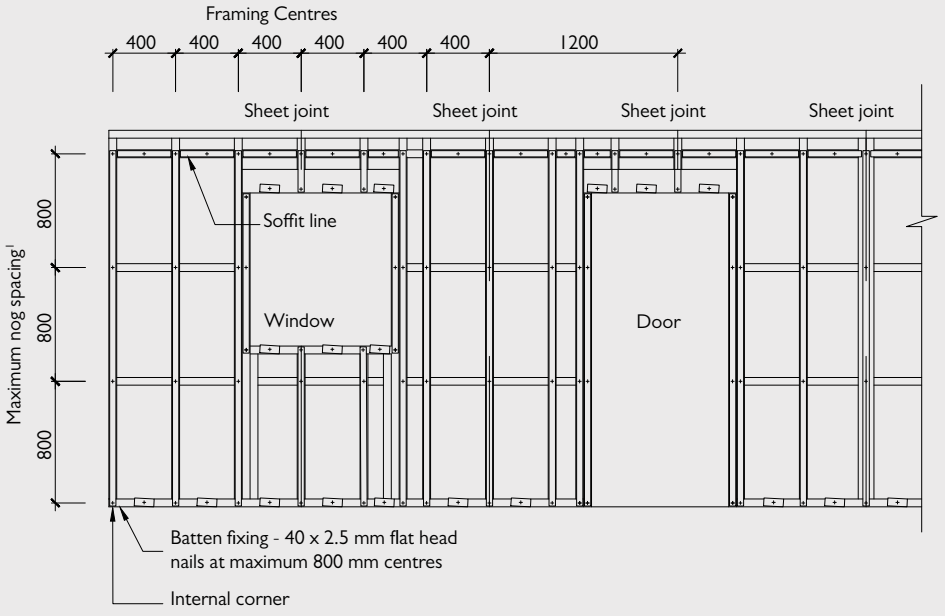

Note:
1. When using vertical cover battens nogs at maximum 600 centres

KDC - Approved Building Consent Document - BC210608_SD_ISSUED - Pg 64 of 125 - 29/09/2021 - vsingh

4.5 SHEET LAYOUT

A sheet layout should form part of architectural drawings and be used from the basis of stud/framing layout.

- Sheet edges must be supported by the framing.
- Sheets are designed to be vertically fixed. **Do not fix sheets horizontally.**
- When laying up on to framing, start at framing corners and work across the wall.
- All treated Shadowclad panels are envelope preservative treated. Where sheets are cut, edges **must** be coated with a brush on timber preservative such as Soudal® Metalex® Clear.
- Cut edges **must** be placed at the top of the sheet to avoid rain drips soaking in to cut end grains.
- Priming the bottom edges and the back (rear) of the sheets to a height of 150mm is required.
  - Shadowclad Ultra sheets are coated on the rear to a height of 150mm (minimum) to meet this requirement.

4.6 FIXINGS – FASTENER DURABILITY

Table 8: Fastener Durability for Shadowclad

Finish	Treatment	Exposure Zone (Refer to Section 4 of NZS 3604)	Material Required
Shadowclad Natural/Ultra	H3.1 LOSP	Zones B and C	Minimum hot dipped galvanised or better
		Zone D (sea spray)	Stainless Steel
Shadowclad Ultra	H3.2 CCA	All Zones	Stainless Steel

4.7 FIXINGS – FASTENER SIZE & LAYOUT

Table 9: Fastener Lengths for Shadowclad

	Minimum Fastener Length and Size (Cavity Fix)
Nails in Timber	60 x 2.8mm
Screws in Timber	8g x 65mm

Shadowclad **must** be nailed or screwed to timber as per below:

- Use flat head (full round head) nails or rose head nails with timber framing. Rose head nails should be considered where a more decorative fastener is desired.
- Standard fixing pattern: fasten sheet edges at 150mm centres and within the panel on all supports at 300mm centres.
- Do not fix to battens that are not installed over studs as the nails will puncture the building wrap.
- Fasten no closer than 7mm to sheet edges except on edge with top lap (weather groove lap), **do not nail through top lap.**
- Fasten Ship lap joints independently to ensure natural sheet expansion is not restricted.
- When using a rigid air barrier the Shadowclad fastener lengths should be increased by the thickness of the panel to ensure required fastener pull out loadings are achieved.
- Drive nails and screws flush.
- Do not nail through the grooves in Shadowclad Groove panels.

Power Driven Fastening

- Best practice is to hand drive nails as better control of nail depth is achieved.
- Paslode Impulse Nailers may be used to fire power driven nails. Refer to Paslode for suitable fasteners as per the minimum lengths stated in Table 9.
- Do not overdrive nails into the sheet.

Fixings at Vertical Sheet Join

Shadowclad Sheets must be fastened off independently to each other. SC006A and SC008A show specific fastener locations to accommodate the Ship lap joint. For Shadowclad Texture and Shadowclad Groove respectively fasten underlap 13mm from sheet edge, with overlap fasten 23mm from sheet edge as detailed.

KDC - Approved Building Consent Document - BC210608_SD_ISSUED - Pg 65 of 125 - 29/09/2021 - vsingh

SC003: Shadowclad Fastener Layout (Studs at 600 Centres Shown)

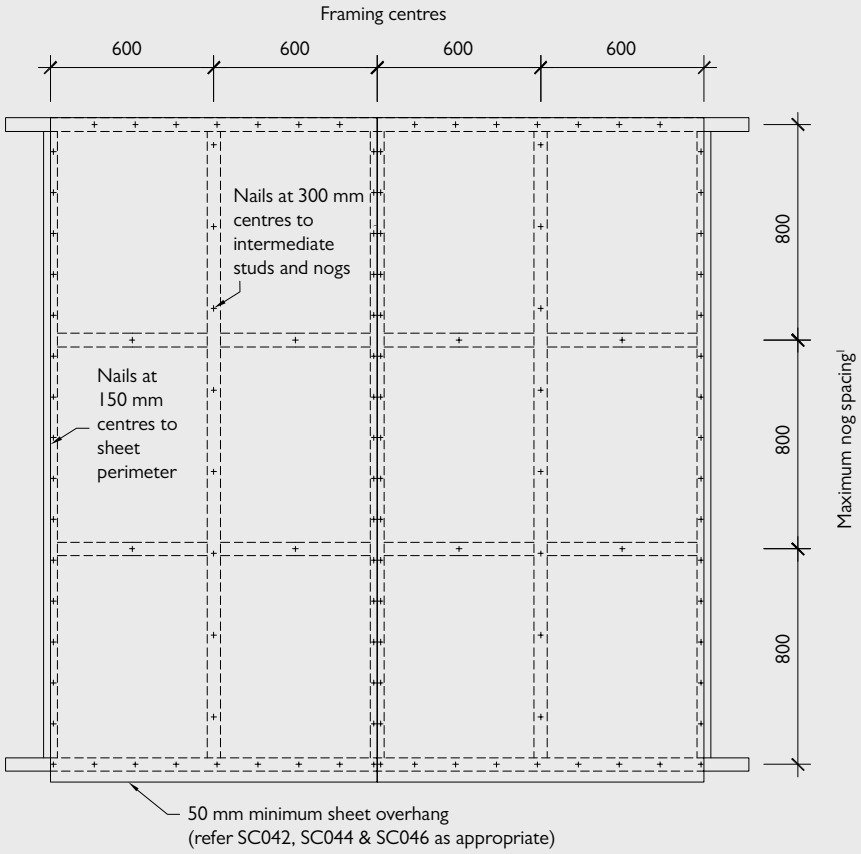

Note:
1. When using vertical cover battens nogs at maximum 600 centres

4.8 INSTALLATION TOOLS FOR SHADOWCLAD®

Correct installation and maintenance of Shadowclad® is necessary to ensure that compliance with the New Zealand Building Code, durability, structural integrity and weathertightness are maintained. CHH Ply have developed two installation tools to compliment the Shadowclad Specification and Installation Guides. These products are an extension of the Specification and Installation Guides and are available by contacting CHH Ply directly via www.shadowclad.co.nz or by calling 0800 326 759.

Shadowclad® sITe APP

The Shadowclad sITe APP is a tool for all building practitioners to aid in the installation of Shadowclad in accordance with the CHH Ply Specification and Installation Guides. The APP includes a context sensitive Key Design Points and Installation Checklist, access to all current literature, installation details, maintenance and other key installation requirements.

Shadowclad Stick

The Shadowclad Stick is an installation tool for Shadowclad. This tool removes the need for builders to develop their own 'jigs' to aid in ensuring that critical clearances, nail spacing's, etc. are applied during the installation of Shadowclad sheets. Section 11 of this literature provides information in relation to the use of the Shadowclad stick.

KDC - Approved Building Consent Document - BC210608_SD_ISSUED - Pg 66 of 125 - 29/09/2021 - vsingh

4.9 SHADOWCLAD KEY INSTALLATION & DESIGN POINTS

The following tasks are provided to installers to point out key installation and design factors when used as an exterior cladding. These do no detract from the requirements to read and understand this literature as a whole.

Task	Tick when checked
Prior to Specification and Installation	
Read the Shadowclad Specification and Installation Guide in its entirety	☐
Framing Plan	
Framing setout drawings to suit Shadowclad fixing and installation guidelines	☐
Sheet Cuts	
Coat all sheet cuts with a preservative timber treatment such as Soudal® Metalex® Clear	☐
After applying Soudal® Metalex® Clear, apply the surface coating (e.g. paint or stain) to cut edges	☐
Place uncut edge to bottom	☐
Fastener Material Type	
Galvanised fasteners or better used (Stainless steel annular groove nails required in sea spray zones and with H3.2 CCA treated Shadowclad Ultra)	☐
Sheet Fastener Pattern	
Around sheet edge – maximum 150mm centre spacing	☐
Within sheet body – maximum 300mm centre spacing	☐
Horizontal Sheet Joints	
Minimum 9mm separation gap between sheets above all Horizontal 'Z' flashings	☐
Prime the bottom of the sheet edge and 150mm up the back (rear) of the sheets	☐
50mm strip of neutral cure silicon sealant or stop ends at all 'Z' flashing terminations excluding terminations at Shadowclad metal corner flashings	☐
Back flashings or 150mm overlap to all flashing butt joints	☐
Expansion Gaps Between Sheets (Vertical Sheet Joints)	
Texture Profile Sheets - 2mm gap between vertical edges of sheets	☐
Groove Profile Sheets - 9mm gap (i.e. full groove space) between vertical edges of sheets	☐
Note: Expansion gaps required between vertical edges of sheets to accommodate natural expansion and contraction of sheets	
Ground Clearances	
Paved/Sealed Ground - minimum 100mm distance from the ground to sheet bottom	☐
Broken Ground - minimum 175mm distance from the ground to sheet bottom	☐
Prime the bottom of the sheet 150mm up the back (rear) of the sheet	☐

Refer to the current Shadowclad® Specification and Installation Guide for full installation specifications and suggested details.

KDC - Approved Building Consent Document - BC210608_SD_ISSUED - Pg 67 of 125 - 29/09/2021 - vsingh

4.10 VERTICAL SHEET JOINTS

Shadowclad sheets have a built-in Ship lap joint and weather groove on the long edges of all sheets.

When installing Shadowclad Groove profile sheets, use a 9mm temporary spacer in the groove alongside Ship lap joint to establish correct expansion gap.

Shadowclad is envelope preservative treated. Where sheets are cut, ends must be coated with a brush on timber preservative in accordance with the relevant manufacturer's instructions. Soudal® Metalex® Clear is recommended. Failure to properly apply preservative to cut edges will negatively affect the durability of cut panels.

SC004: Shadowclad Texture and Groove Sheet Dimensions

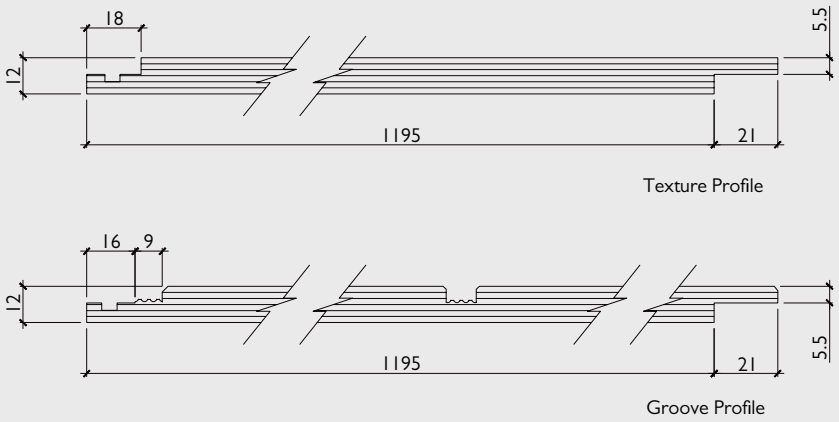

SC006: Shadowclad Texture Vertical Joint (Cavity)

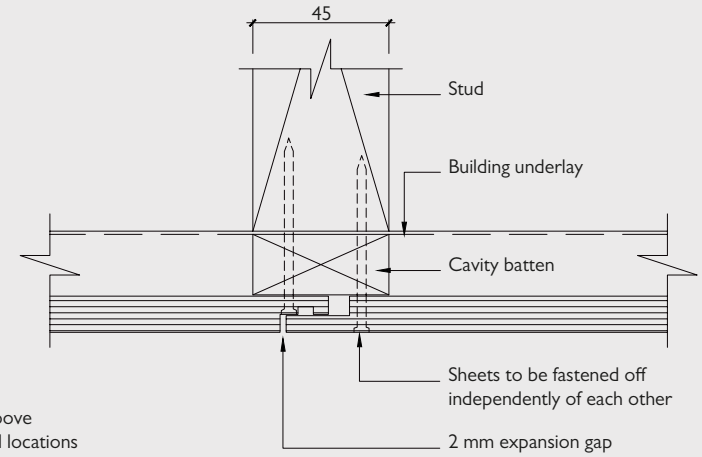

Note:
1. Do not nail through weather groove
2. Refer to SC006A for specific nail locations

KDC - Approved Building Consent Document - BC210608_SD_ISSUED - Pg 68 of 125 - 29/09/2021 - vsingh

SC006A: Shadowclad Texture Vertical Joint Fastener Locations (Cavity)

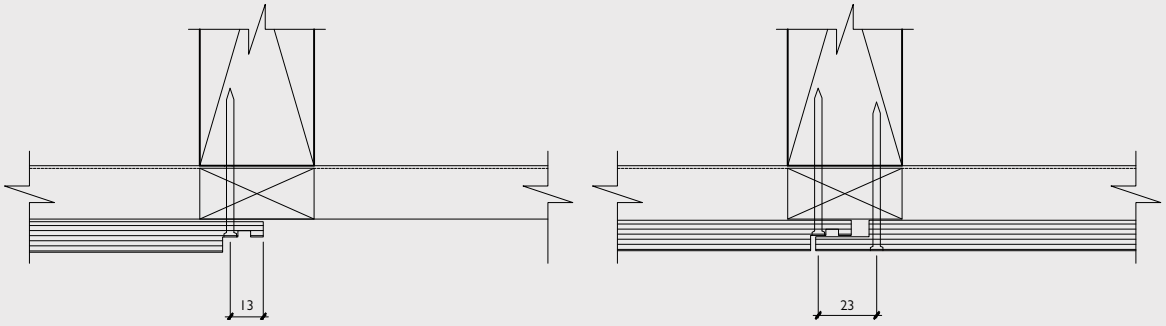

SC008: Shadowclad Groove Vertical Joint (Cavity)

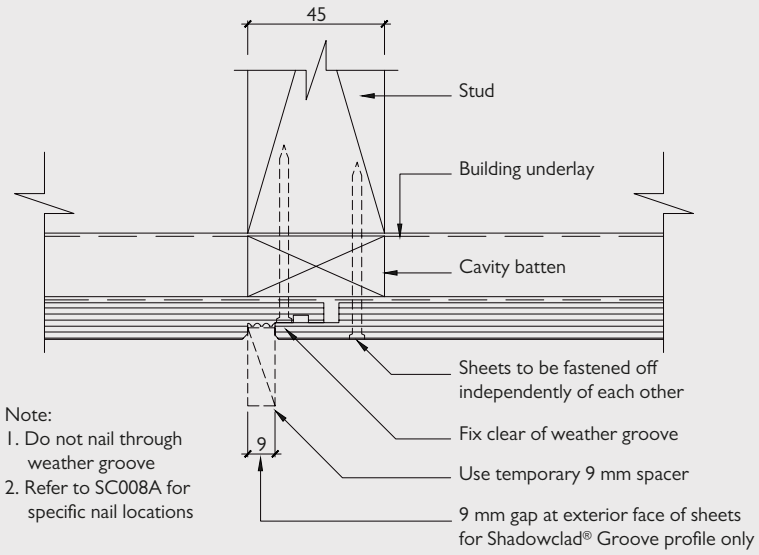

Note:
1. Do not nail through weather groove
2. Refer to SC008A for specific nail locations

SC008A: Shadowclad Groove Vertical Joint Fastener Locations (Cavity)

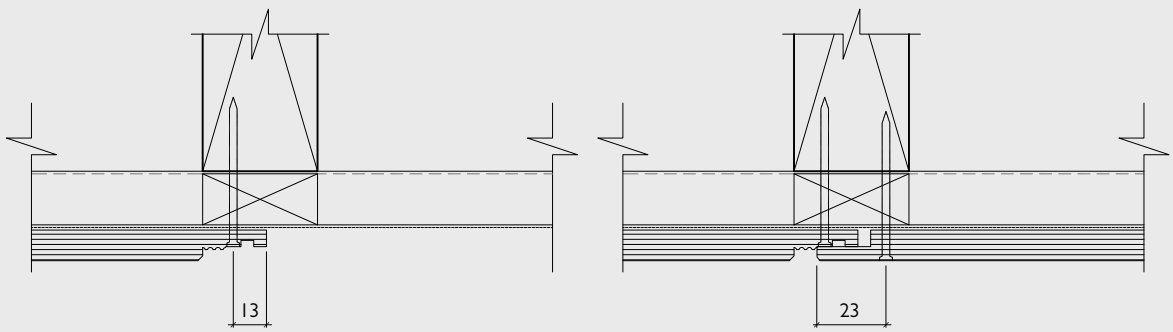

KDC - Approved Building Consent Document - BC210608 - SD - ISSUED - Pg 69 of 125 - 29/09/2021 - vsingh

SC010: Shadowclad Vertical Joint with Optional Cover Batten (Cavity)

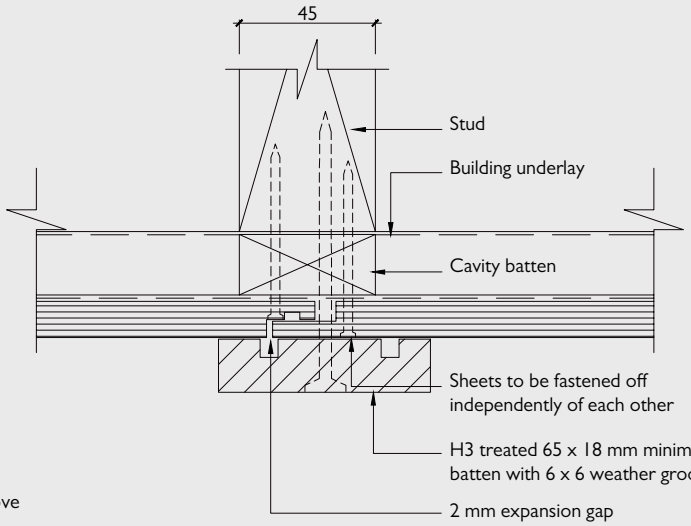

Note:
1. Do not nail through weather groove

SC012: Shadowclad Nogging for Vertical Cover Batten Between Studs (Cavity)

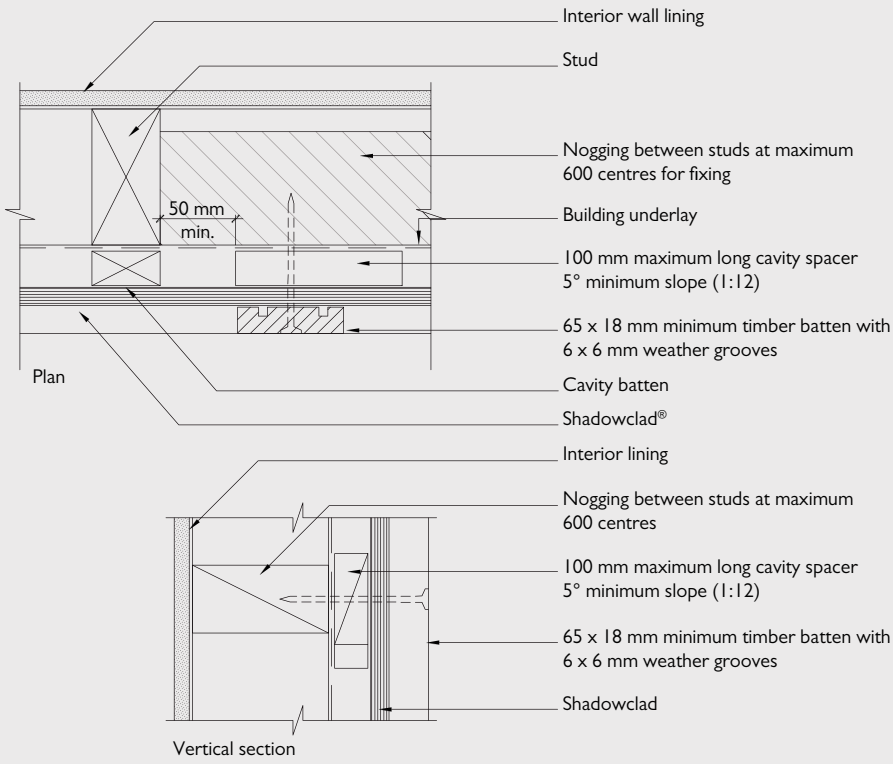

KDC - Approved Building Consent Document - BC210608_SD_ISSUED - Pg 70 of 125 - 29/09/2021 - vsingh

SC014: Shadowclad Vertical Joint with Top Hat Flashing (Cavity)

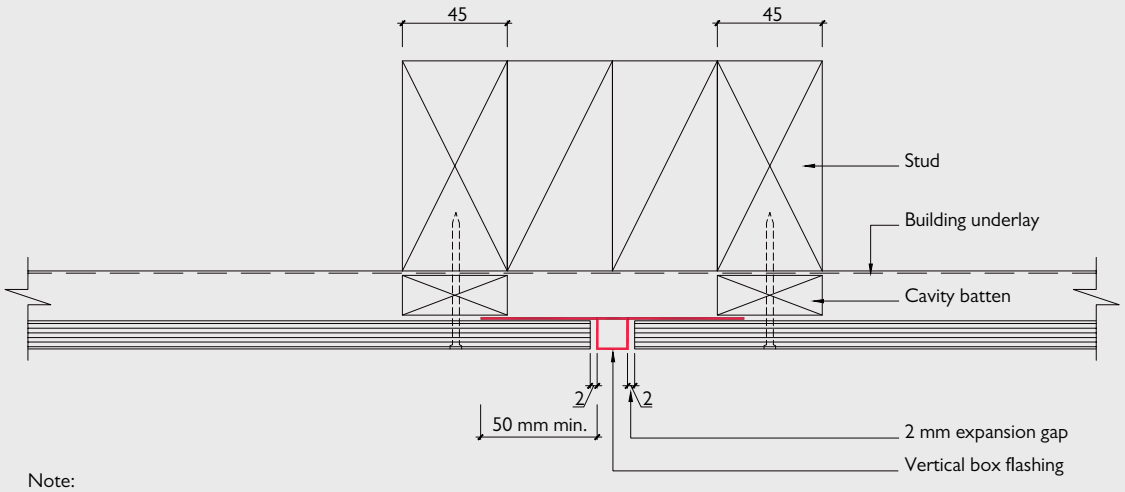

Note:
1. Treat all cut edges with Soudal® Metalex® Clear

4.11 HORIZONTAL SHEET JOINTS

At floor joist level a horizontal joint must be provided to accommodate the movement resulting from timber joist shrinkage and settlement.

A Shadowclad Horizontal 'Z' flashing should be used for horizontal sheet joints.

Acceptable Solution E2/AS1 requires drained cavities to be limited to a height of two storeys.

If aluminium 'Z' flashings are being used, all butt joints must include proprietary back flashings. Stainless steel flashings should be lapped by a minimum 150mm at joins.

A 50mm strip of neutral cure silicon (refer to SC0100 General Silicon Sealing of Horizontal 'Z' Flashings) or stop ends (as applicable) required at all 'Z' flashing terminations excluding terminations at Shadowclad metal corner flashings.

KDC - Approved Building Consent Document - BC210608 - SD - ISSUED - Pg 71 of 125 - 29/09/2021 - vsingh

SC0100: Shadowclad General Silicon Sealing of Horizontal 'Z' Flashings

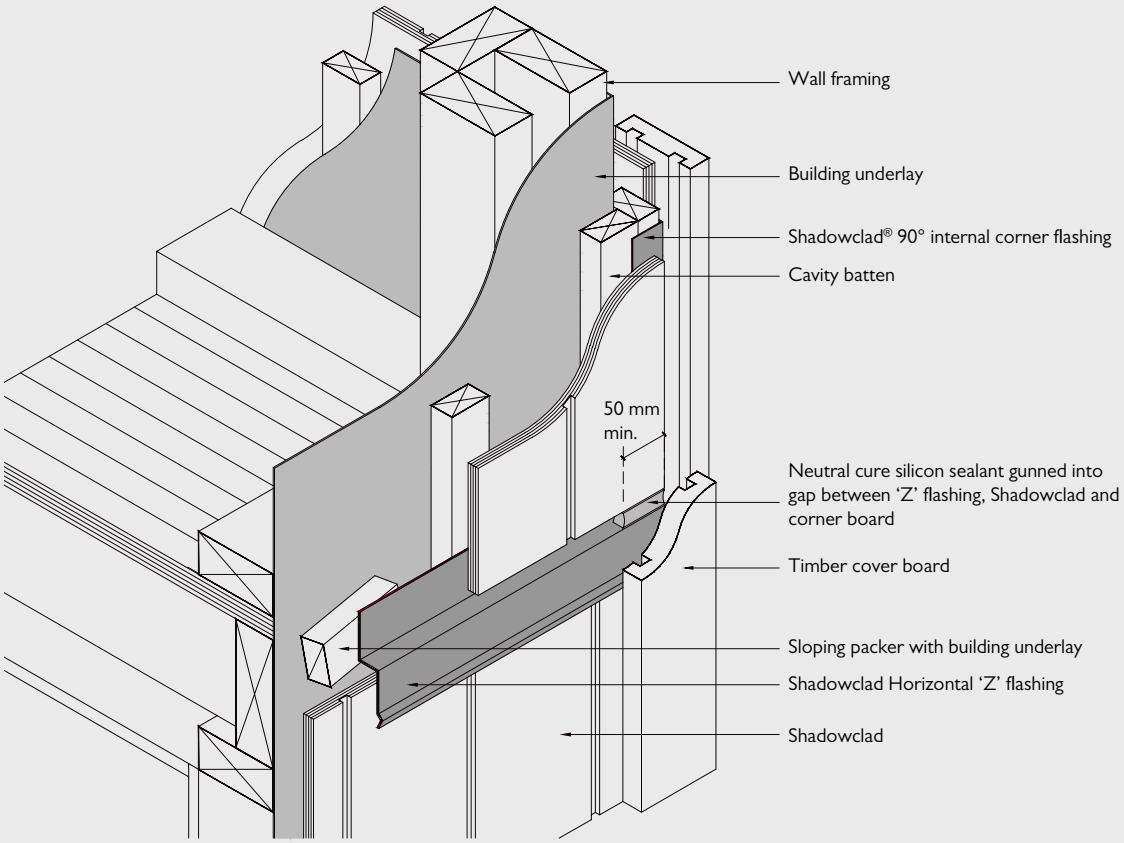

SC016: Shadowclad Mid Floor Horizontal Joint (Cavity)

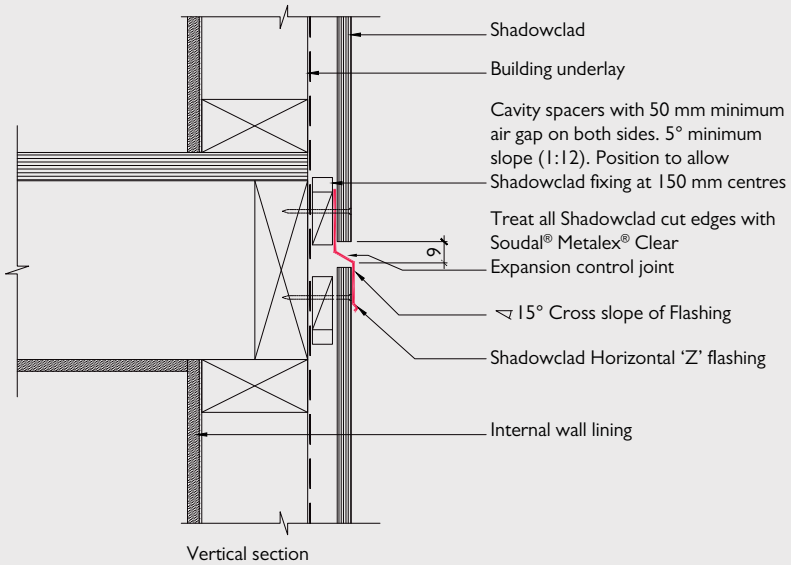

Vertical section

Notes:

1. 50 mm strip of neutral cure silicon sealant must be provided at the termination point of all 'Z' flashings at windows, corner boxes, etc (refer to SC0100)
2. Detail is only suitable for drained cavities up to two storeys or 7 m in height. For drained cavities over two storeys or 7 m in height refer to detail SC018 Horizontal Joint - Non Continuous (Cavity)
3. Back flashings or 150 mm overlap required at all horizontal flashing butt joints (refer to SC0102 and SC0104)
4. Treat all Shadowclad cut edges with Soudal® Metalex® Clear

KDC - Approved Building Consent Document - BC210608_SD_ISSUED - Pg 72 of 125 - 29/09/2021 - vsingh

SC018: Shadowclad Mid Floor Horizontal Joint – Non Continuous (Cavity)

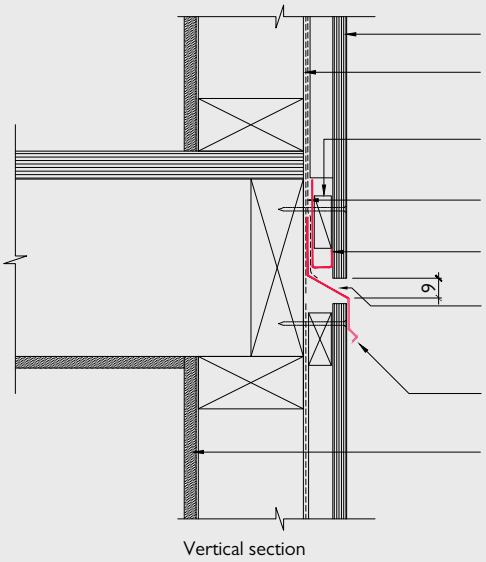

Vertical section

Notes:
1. Stop ends must be provided at the termination point of all inter-storey 'Z' flashings
2. Detail SC016 Mid Floor Horizontal Joint (Cavity) may be used for continuous cavity up to two storey or 7 m in height
3. Back flashings or 150 mm overlap required at all horizontal flashing butt joints (refer to SC0102 and SC0104)
4. Treat all Shadowclad cut edges with Soudal® Metalex® Clear

4.12 EXTERNAL CORNERS

SC020: Shadowclad External Corner with External Box Flashing (Cavity)

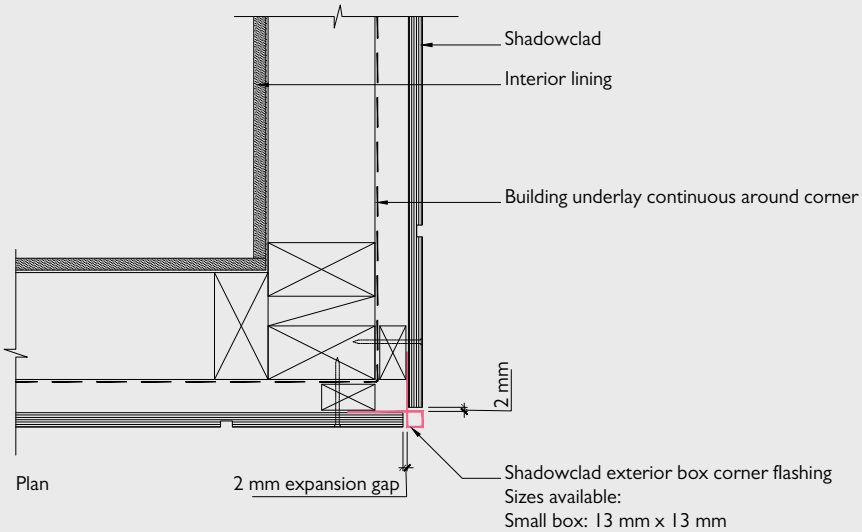

Plan

2 mm expansion gap

KDC - Approved Building Consent Document - BC210608 - SD - ISSUED - Pg 73 of 125 - 29/09/2021 - vsingh

SC022: Shadowclad External Corner with Cover Boards (Cavity)

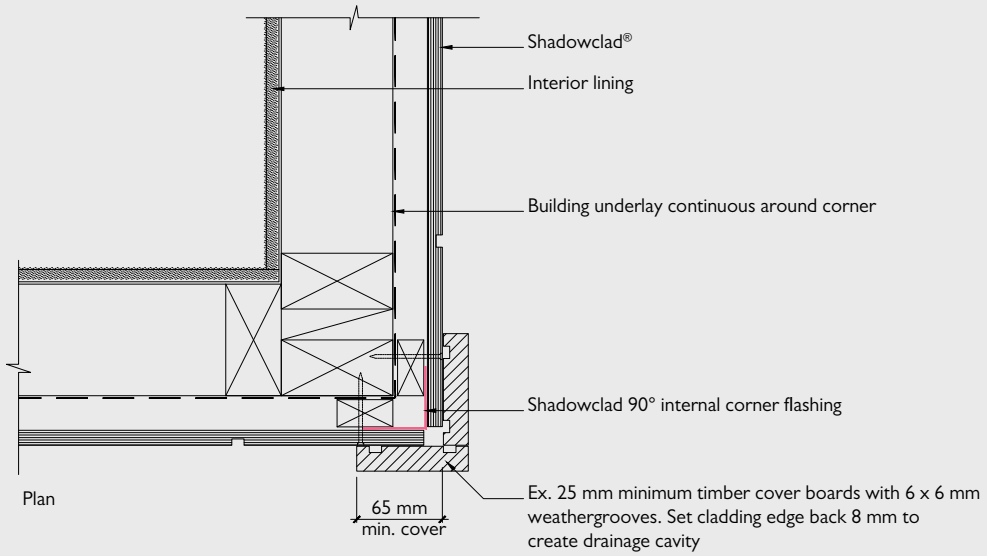

Note:
1. Treat all cut edges with Soudal® Metalex® Clear
2. 50 mm strip of sealant must be provided at the termination point of all 'Z' flashings at windows, corner boxes, etc. (refer to SC0100)

4.13 INTERNAL CORNERS

SC024: Shadowclad Internal Corner with 90˚ Flashing (Cavity)

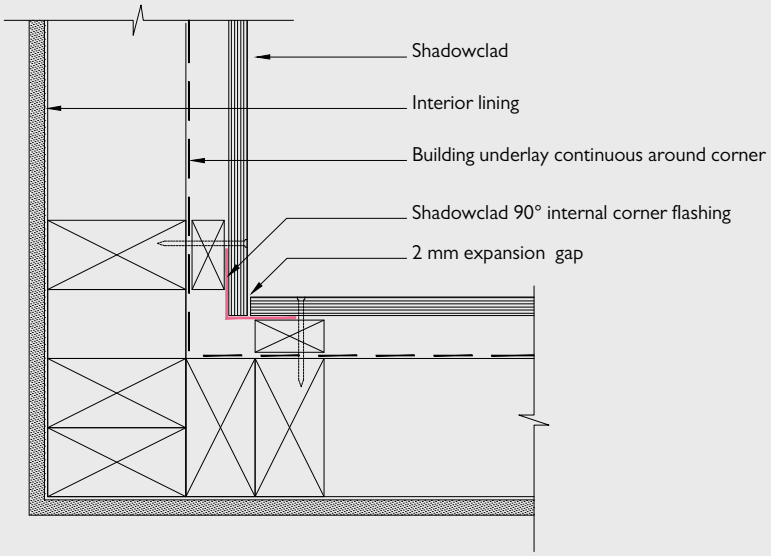

Plan

Note:
1. Treat all cut edges with Soudal® Metalex® Clear

KDC - Approved Building Consent Document - BC210608_SD_ISSUED - Pg 74 of 125 - 29/09/2021 - vsingh

SC026: Shadowclad Internal Corner with 'W' Flashing (Cavity)

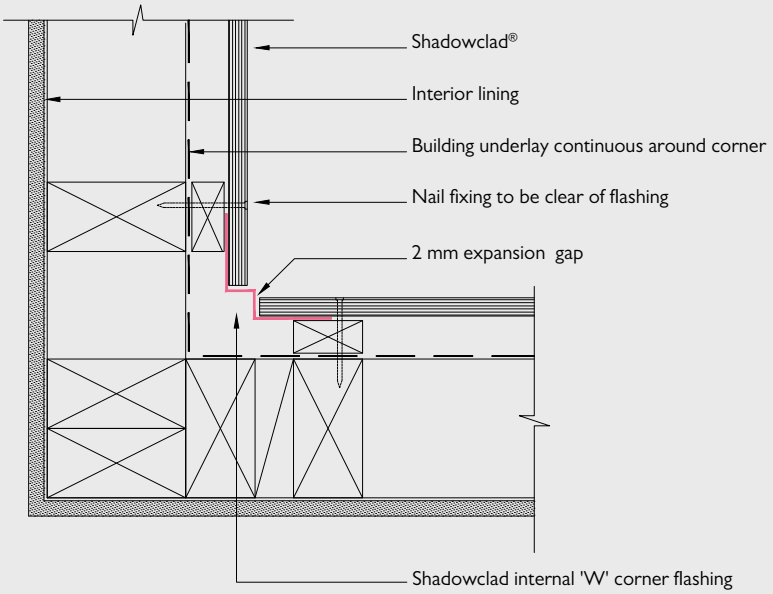

Note:
1. Treat all cut edges with Soudal® Metalex® Clear

4.14 SHADOWCLAD FLASHING JUNCTION POINTS

Flashings should have expansion joints where necessary to provide adequate allowance for thermal expansion as set out below.

- Expansion joints to be provided for joined flashings when their combined length exceeds 8 metres.
- Even if less than 8 metres in length, where both ends of a flashing are constrained and fixed, allowance should be made for expansion.

Cavity Base Closure

Fix Shadowclad cavity base closures to bottom plates through the upstand with 40 x 2.5mm, hot dipped galvanised or stainless steel (as appropriate) flat head nails at 300mm centres.

The cavity base closure should be positioned to allow a minimum drip edge to the wall cladding of 15mm at the base of walls, and 15mm above window head flashings.

Internal and External Flashings

Internal and external angles and 'Z' flashings can be nominally fixed with hot dipped galvanised or stainless steel (as applicable) flat head nails and then permanently fixed with the Shadowclad fasteners penetrating the flashing wings/upstands.

Horizontal 'Z' Flashings

Horizontal aluminium 'Z' flashings should be butted together with a back flashing to create a weathertight joint (refer to SC0102).

Stainless steel back flashings should overlap by a minimum of 150mm at joins to create weathertight joints where horizontal flashings meet (refer to SC0104).

'Z' Flashings Terminations

Where inter-storey 'Z' flashings terminate stop ends must be installed.

A 50mm strip of neutral cure silicon (refer to SC0100 General Silicon Sealing of Horizontal 'Z' Flashings) or stop ends (as applicable) required at all 'Z' flashing terminations excluding terminations at Shadowclad metal corner flashings.

KDC - Approved Building Consent Document - BC210608 - SD - ISSUED - Pg 75 of 125 - 29/09/2021 - vsingh

SC0102: Shadowclad Aluminium Flashing Junctions and Connections (Cavity)

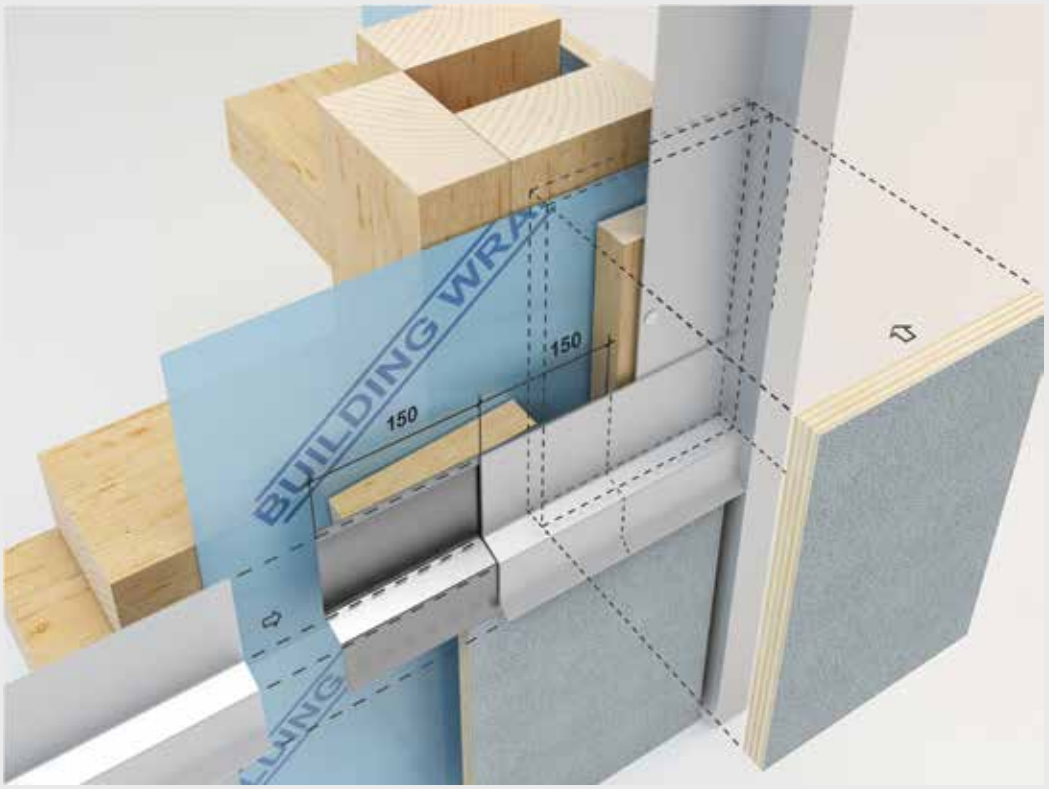

SC0104: Shadowclad Stainless Steel 'Z' Flashing Joins (Cavity)

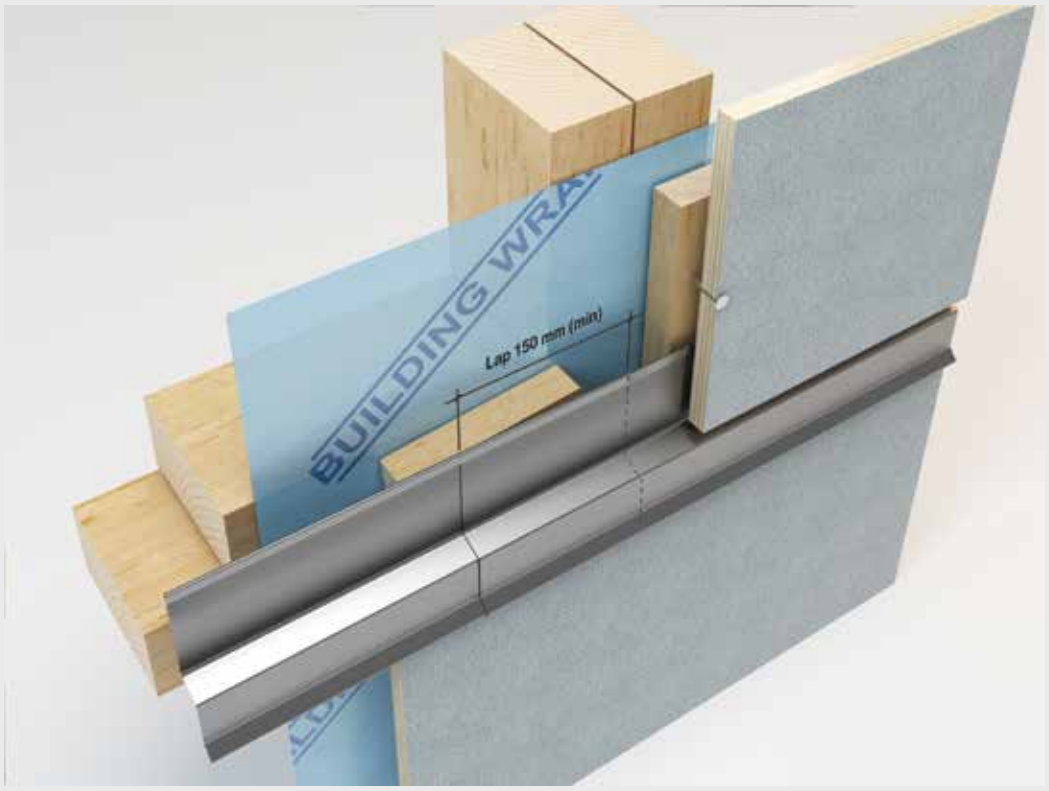

KDC - Approved Building Consent Document - BC210608_SD_ISSUED - Pg 76 of 125 - 29/09/2021 - vsingh

4.15 WINDOW PENETRATIONS

Window joinery flashings (i.e. head and sill flashings) should be sourced from the joinery fabricator to meet the requirements of Acceptable Solution E2/ASI or an Alternative Solution such as the Window Association of New Zealand Window Installation System (WANZ WIS) which can be downloaded at www.wanz.org.nz.

SC028: Shadowclad Window Head Detail (Cavity)

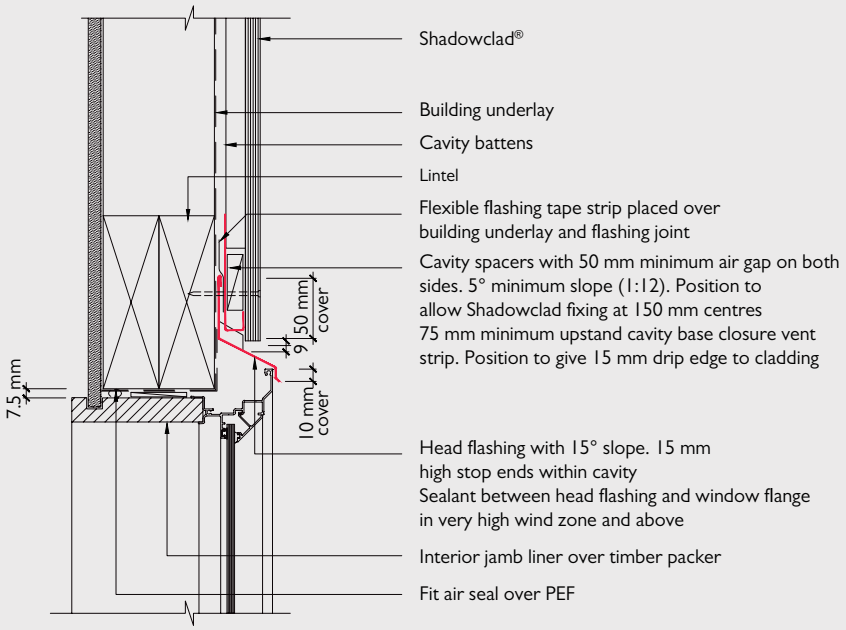

Shadowclad®

Building underlay

Cavity battens

Lintel

Flexible flashing tape strip placed over building underlay and flashing joint

Cavity spacers with 50 mm minimum air gap on both sides. 5° minimum slope (1:12). Position to allow Shadowclad fixing at 150 mm centres
75 mm minimum upstand cavity base closure vent strip. Position to give 15 mm drip edge to cladding

Head flashing with 15° slope. 15 mm high stop ends within cavity
Sealant between head flashing and window flange in very high wind zone and above

Interior jamb liner over timber packer

Fit air seal over PEF

Note:
1. Treat all cut edges with Soudal® Metalex® Clear
2. Stop ends to head flashing terminations



KDC - Approved Building Consent Document - BC210608 - SD - ISSUED - Pg 77 of 125 - 29/09/2021 - vsingh

SC030: Shadowclad Jamb Detail (Cavity)

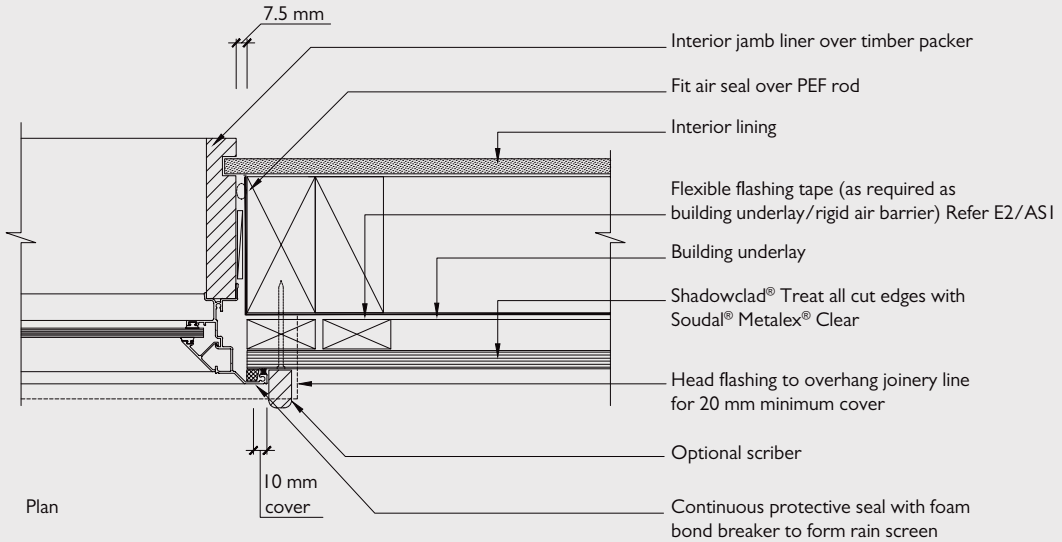

Note:
1. Treat all Shadowclad cut edges with Soudal® Metalex® Clear
2. 50 mm strip of sealant must be provided at the termination point of all 'Z' flashings at windows, corner boxes, etc



KDC - Approved Building Consent Document - BC210608_SD_ISSUED - Pg 78 of 125 - 29/09/2021 - vsingh

SC032: Shadowclad Window Sill Detail (Cavity)

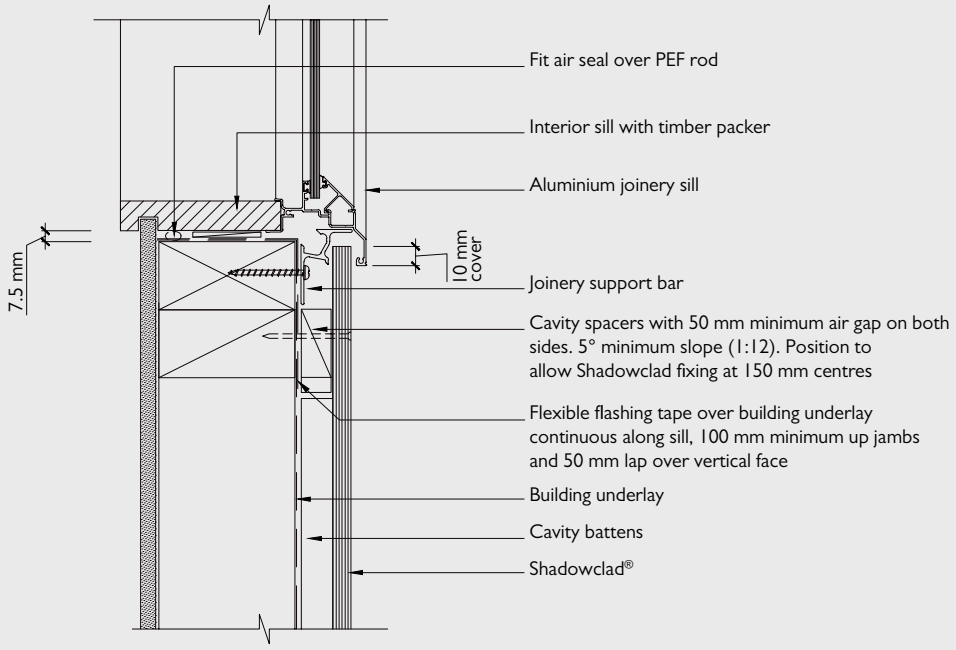

Vertical section

Note:
1. Treat all cut edges with Soudal® Metalex® Clear

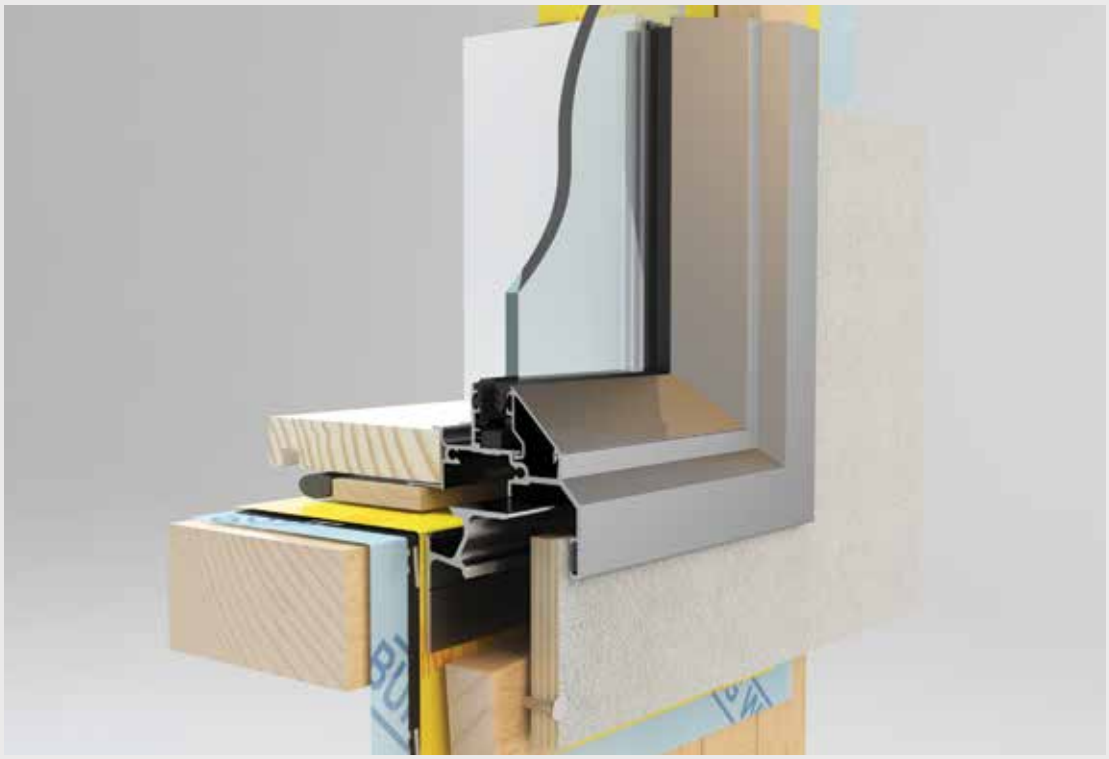

KDC - Approved Building Consent Document - BC210608 - SD - ISSUED - Pg 79 of 125 - 29/09/2021 - vsingh

4.16 WALL PENETRATIONS

SC034A: Shadowclad Meterbox Vertical Cross Section (Cavity)

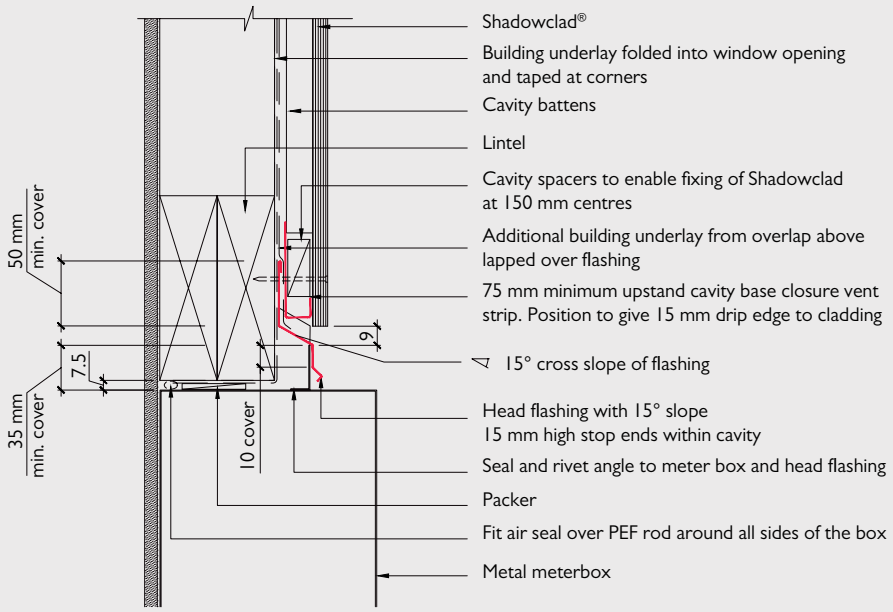

Vertical section

Note:
1. Treat all cut edges with Soudal® Metalex® Clear
2. Priming the bottom edge and back (rear) of the sheets to a height 150 mm is required

SC034B: Shadowclad Meterbox Horizontal Cross Section (Cavity)

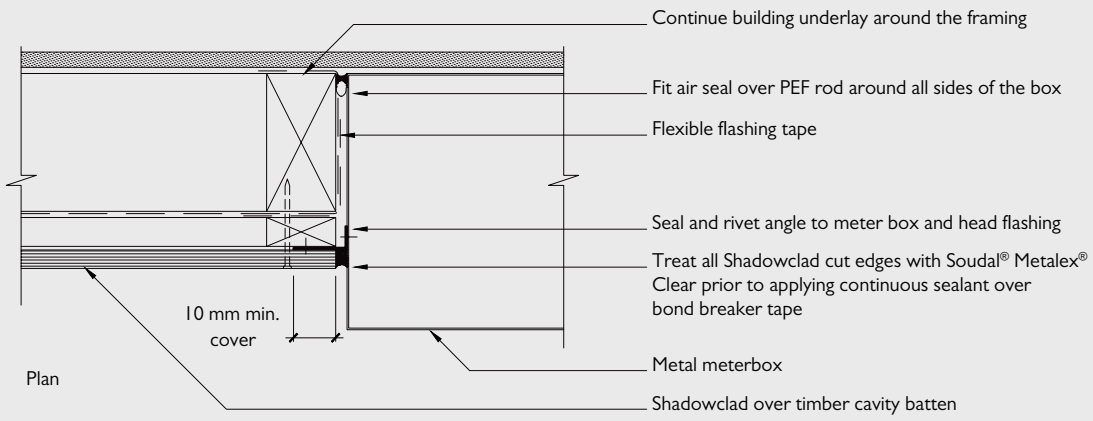

Plan

Note:
1. Treat all cut edges with Soudal® Metalex® Clear
2. 50 mm strip of neutral cure silicon sealant must be provided at termination points of all 'Z' flashings at meter boxes

KDC - Approved Building Consent Document - BC210608_SD_ISSUED - Pg 80 of 125 - 29/09/2021 - vsingh

SC036: Shadowclad Soffit Detail (Cavity)

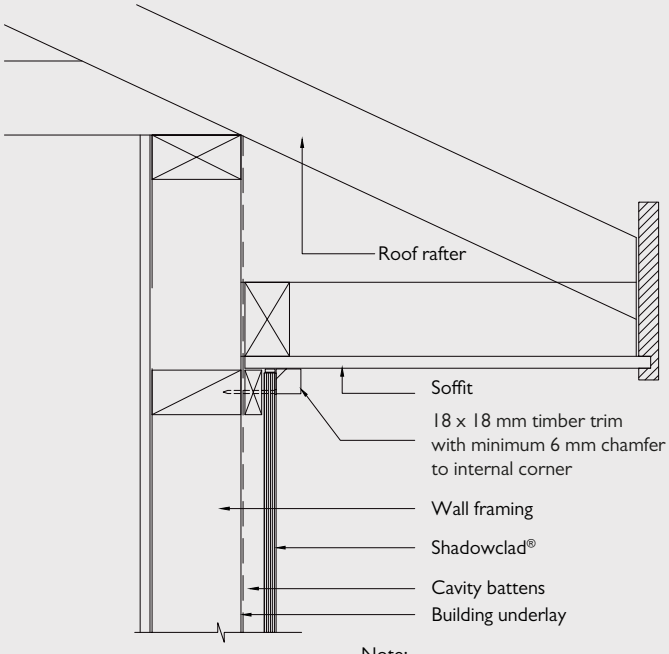

Vertical section

Note:
1. Cut edges should be placed at the top of the sheet to avoid rain drips soaking into cut end grains
2. Treat all cut edges with Soudal® Metalex® Clear

SC036A: Shadowclad Alternative Soffit Detail (Cavity)

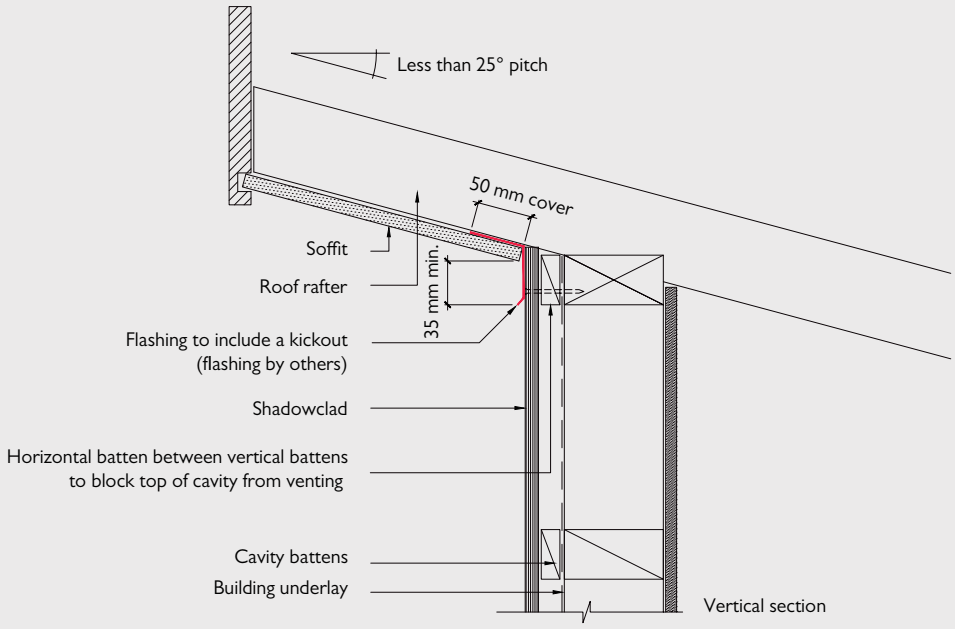

Note:
1. Cut edges should be placed at the top of the sheet to avoid rain drips soaking into cut end grains
2. Treat all cut edges with Soudal® Metalex® Clear

KDC - Approved Building Consent Document - BC210608 - SD ISSUED - Pg 81 of 125 - 29/09/2021 - vsingh

SC038: Shadowclad Soffit Alternative Detail (Cavity)

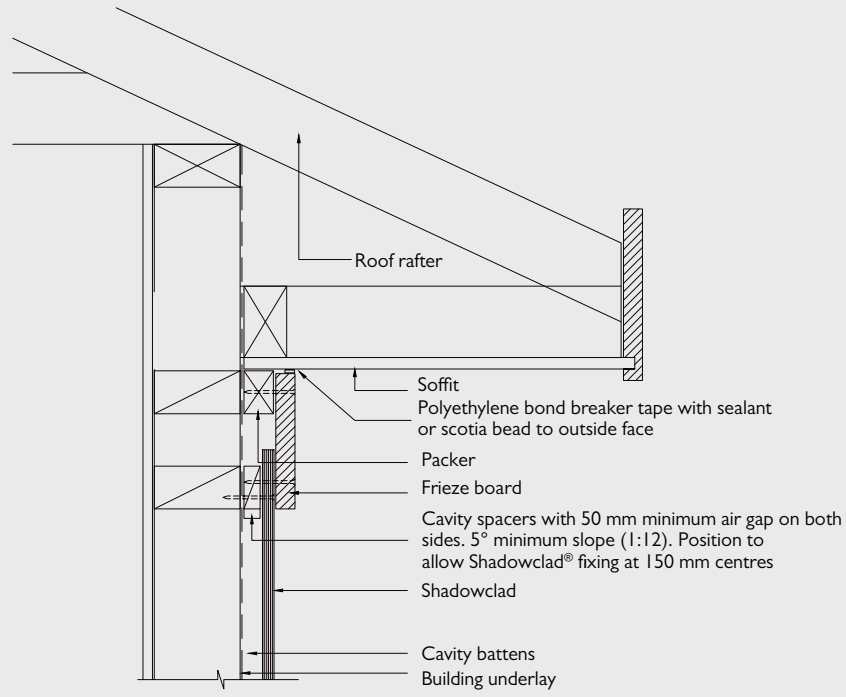

Note:
1. Cut edges should be placed at the top of the sheet to avoid rain drips soaking into cut end grains
2. Treat all cut edges with Soudal® Metalex® Clear

SC038A: Shadowclad Alternative Soffit Detail (Cavity)

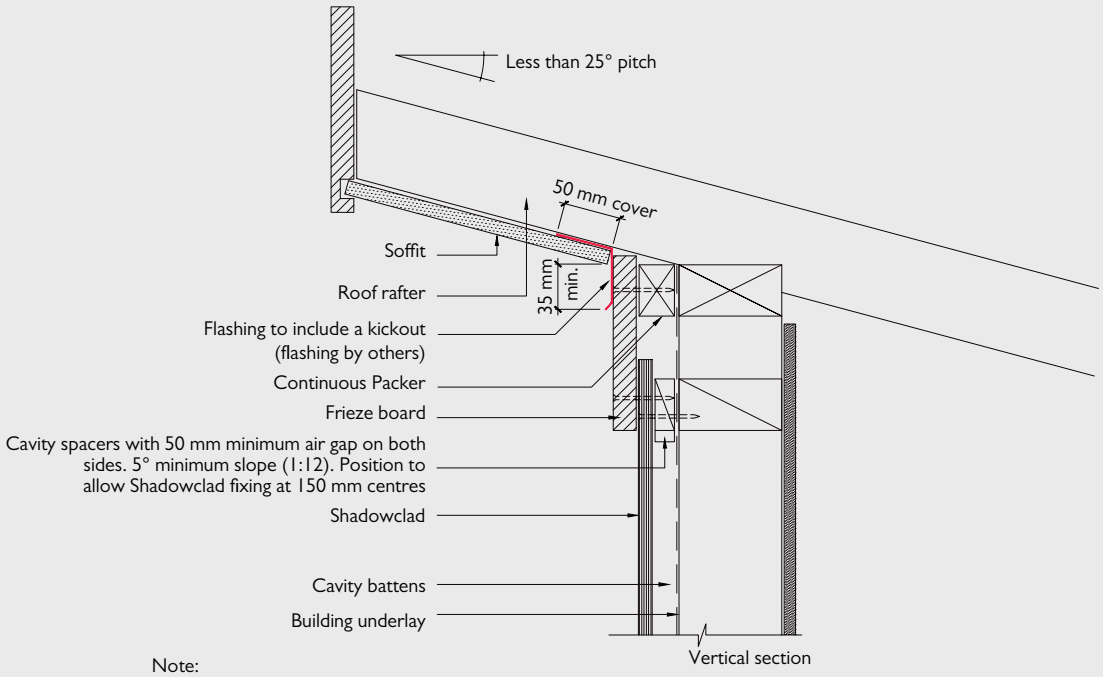

Note:
1. Cut edges should be placed at the top of the sheet to avoid rain drips soaking into cut end grains
2. Treat all cut edges with Soudal® Metalex® Clear

KDC - Approved Building Consent Document - BC210608_SD_ISSUED - Pg 82 of 125 - 29/09/2021 - vsingh

SC040: Shadowclad Pipe Penetration (Cavity)

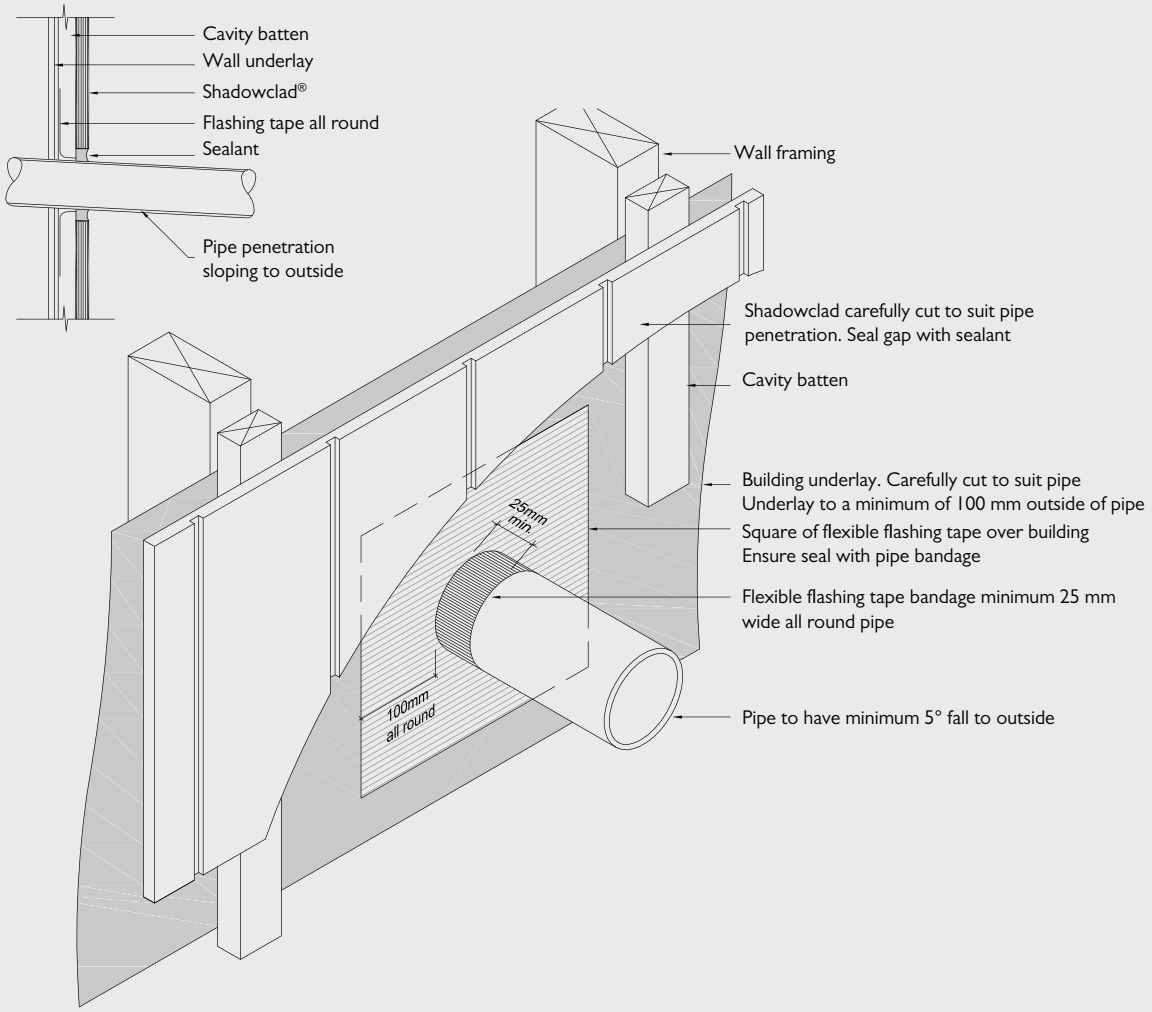

KDC - Approved Building Consent Document - BC210608 - SD - ISSUED - Pg 83 of 125 - 29/09/2021 - vsingh

4.17 SHEET CLEARANCES

Ground Clearances

Shadowclad must overhang the bottom plate on a concrete slab by a minimum of 50mm as required by NZS 3604 and E2 - External Moisture. Maximum distance from the bottom of the sheet to the fixing shall not exceed 75mm.

The bottom edge of the Shadowclad sheet must be a minimum of 50mm above decks and verandahs, 100mm above paved ground and a minimum of 175mm above unprotected ground.

For garage door openings, refer Paragraph 9 "Openings to garages" in Acceptable Solution E2/AS1.

SC042: Shadowclad Overhangs and Ground Clearances (Cavity)

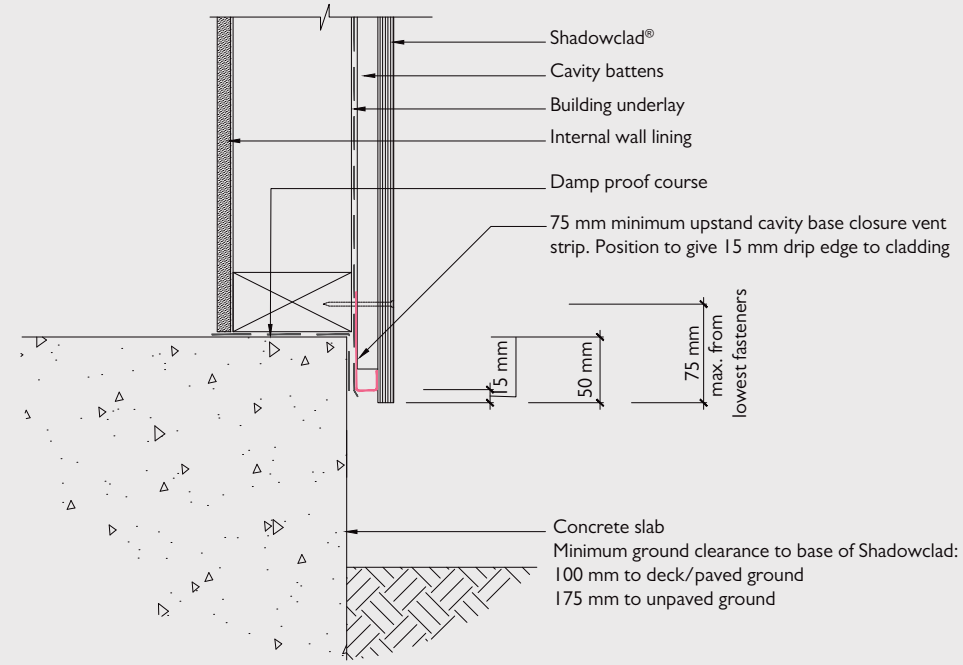

Vertical section

Note:
1. Cut edges should be placed at the top of the sheet to avoid rain drips soaking into cut end grains
2. Treat all cut edges with Soudal® Metalex® Clear
3. Priming the bottom edge and back (rear) of the sheets to a height 150 mm is required

KDC - Approved Building Consent Document - BC210608_SD_ISSUED - Pg 84 of 125 - 29/09/2021 - vsingh

SC042A: Shadowclad Overhang for Timber Ground Floor to Non-Cantilevered Wall

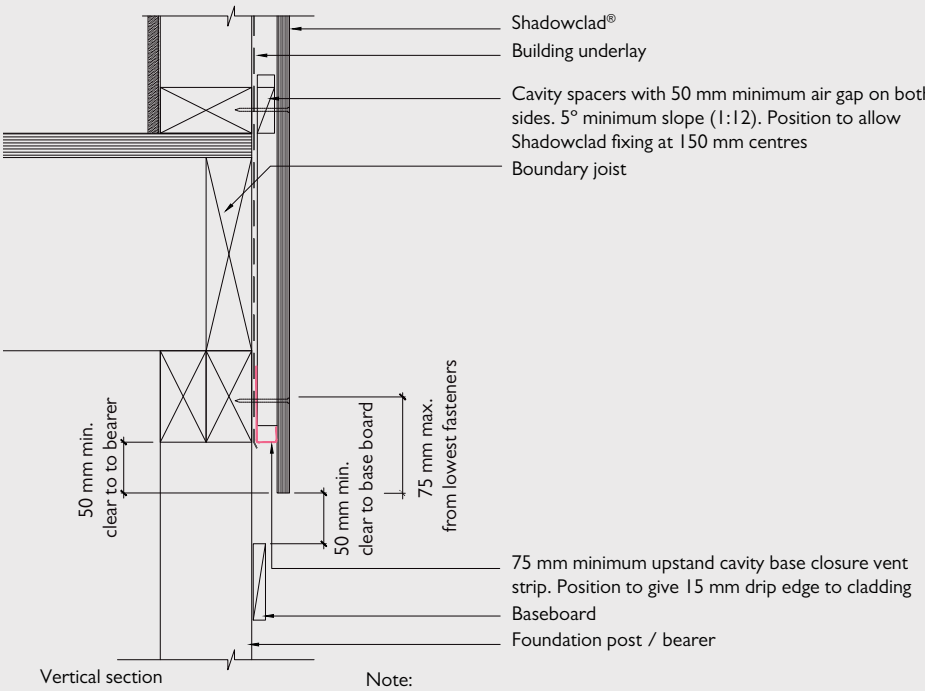

Note:
1. Cut edges should be placed at the top of the sheet to avoid rain drips soaking into cut end grains
2. Treat all cut edges with Soudal® Metalex® Clear
3. Priming the bottom edge and back (rear) of the sheets to a height 150 mm is required

SC042B: Shadowclad Overhang for Timber Ground Floor to Cantilevered Wall

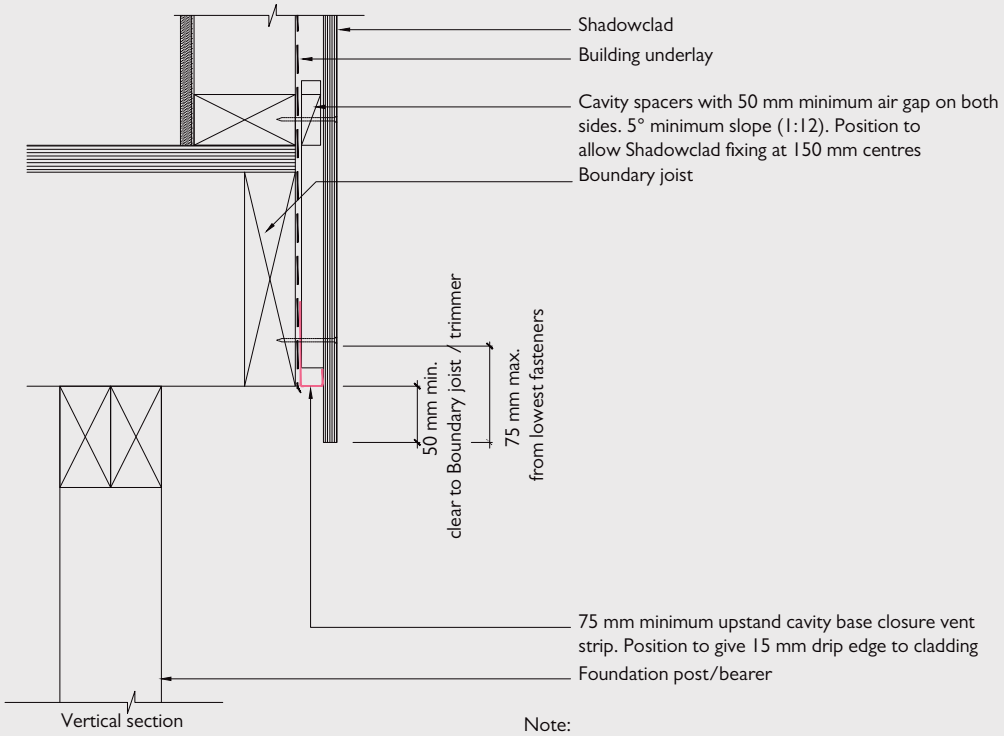

Note:
1. Cut edges should be placed at the top of the sheet to avoid rain drips soaking into cut end grains
2. Treat all cut edges with Soudal® Metalex® Clear
3. Priming the bottom edge and back (rear) of the sheets to a height 150 mm is required

KDC - Approved Building Consent Document - BC210608 - SD - ISSUED - Pg 85 of 125 - 29/09/2021 - vsingh

SC044: Shadowclad Upper Storey to Masonry Lower Storey (Cavity)

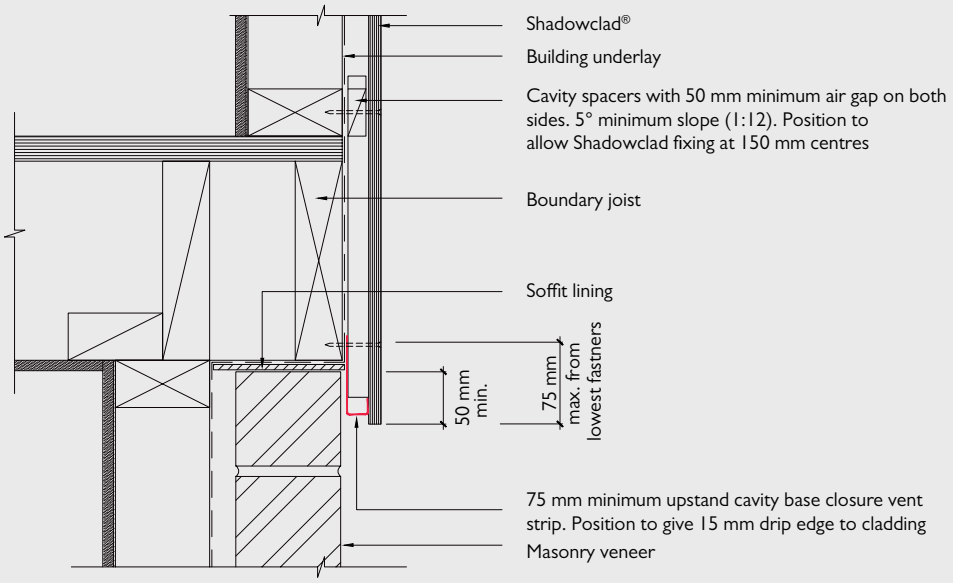

Vertical section

Note:
1. Cut edges should be placed at the top of the sheet to avoid rain drips soaking into cut end grains
2. Treat all cut edges with Soudal® Metalex® Clear
3. Priming the bottom edge and back (rear) of the sheets to a height 150 mm is required

KDC - Approved Building Consent Document - BC210608_SD_ISSUED - Pg 86 of 125 - 29/09/2021 - vsingh

4.18 OTHER DETAILS

SC046: Shadowclad® Timber Ground Floor to Non-Cantilevered Deck (Cavity)

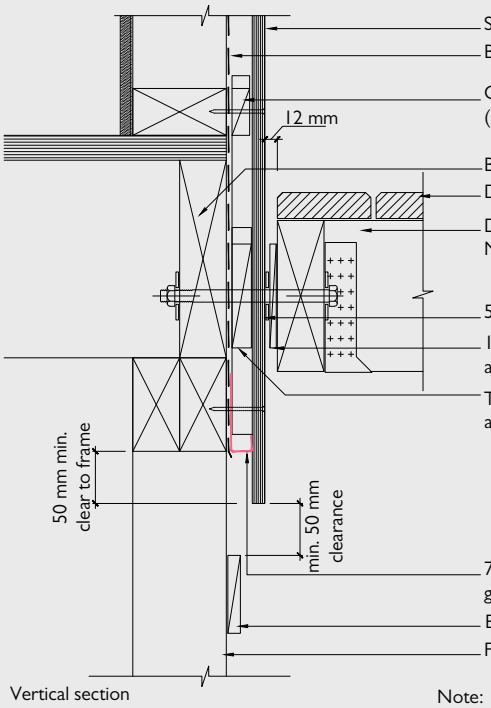

Vertical section

Shadowclad®
Building underlay
Cavity spacers with 50 mm minimum air gap on both sides. 5° minimum slope (1:12). Position to allow Shadowclad fixing at 150 mm centres
Boundary joist
Decking
Deck joists attached to stringer with joist hangers Refer NZS3604 for fixing details Shadowclad sealed prior to fixing packer
50 x 3 mm thick EPDM washer
12 mm thick by 150 mm long H3.2 CCA treated solid timber packer at fixings
Timber packer behind Shaowclad with 5° slope to top of packer as per cavity battens
75 mm minimum upstand cavity base closure vent strip. Position to give 15 mm drip edge to cladding
Baseboard
Foundation post/bearer

Note:
1. Cut edges should be placed at the top of the sheet to avoid rain drips soaking into cut end grains
2. Treat all cut edges with Soudal® Metalex® Clear
3. Priming the bottom edge and back (rear) of the sheets to a height 150 mm is required

SC048: Shadowclad Mid Floor to Non-Cantilevered Deck (Cavity)

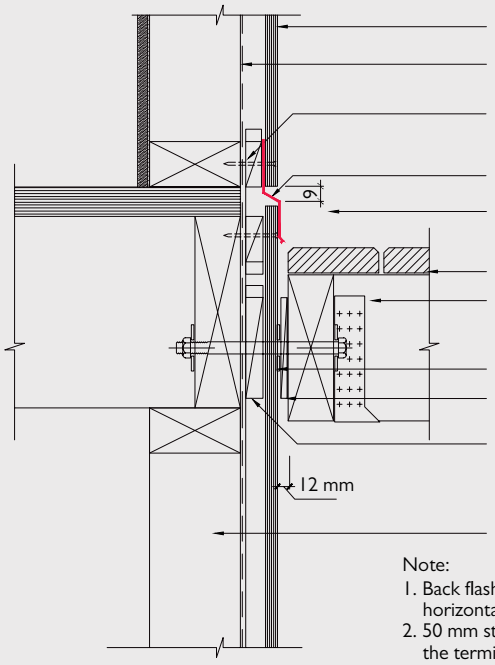

Vertical section

Shadowclad
Building underlay
Cavity spacers with 50 mm minimum air gap on both sides. 5° minimum slope (1:12). Position to allow Shadowclad fixing at 150 mm centres
◁15° cross slope of flashing
Shadowclad Horizontal 'Z' head flashing
Decking
Deck joists attached to stringer with joist hangers. Refer NZS3604 for fixing details Shadowclad sealed prior to fixing packer
50 x 3 mm thick EPDM washer
12 mm thick by 150 mm long H3.2 CCA treated solid timber packer at fixings
Timber packer behind Shaowclad with 5° slope to top of packer as per cavity battens
Foundation / wall detail

Note:
1. Back flashing or 150 mm overlap required at all horizontal flashing butt joints
2. 50 mm strip of neutral cure silicon sealantmust be provided at the termination point of all 'Z' flashings at windows, corner boxes, etc
3. Treat all cut edges with Soudal® Metalex® Clear

KDC - Approved Building Consent Document - BC210608 - SD - ISSUED - Pg 87 of 125 - 29/09/2021 - vsingh

SC050: Shadowclad Basic Apron Flashing (Cavity)

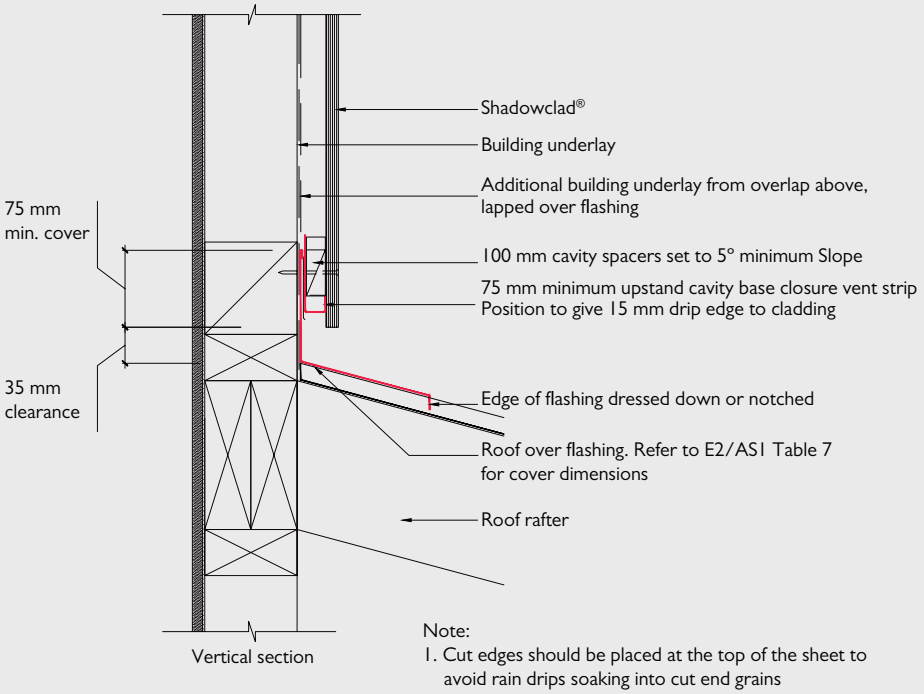

Note:
1. Cut edges should be placed at the top of the sheet to avoid rain drips soaking into cut end grains
2. Treat all cut edges with Soudal® Metalex® Clear
3. Priming the bottom edge and back (rear) of the sheets to a height 150 mm is required

KDC - Approved Building Consent Document - BC210608_SD_ISSUED - Pg 88 of 125 - 29/09/2021 - vsingh

SC052: Shadowclad Balustrade to Wall Junction (Cavity)

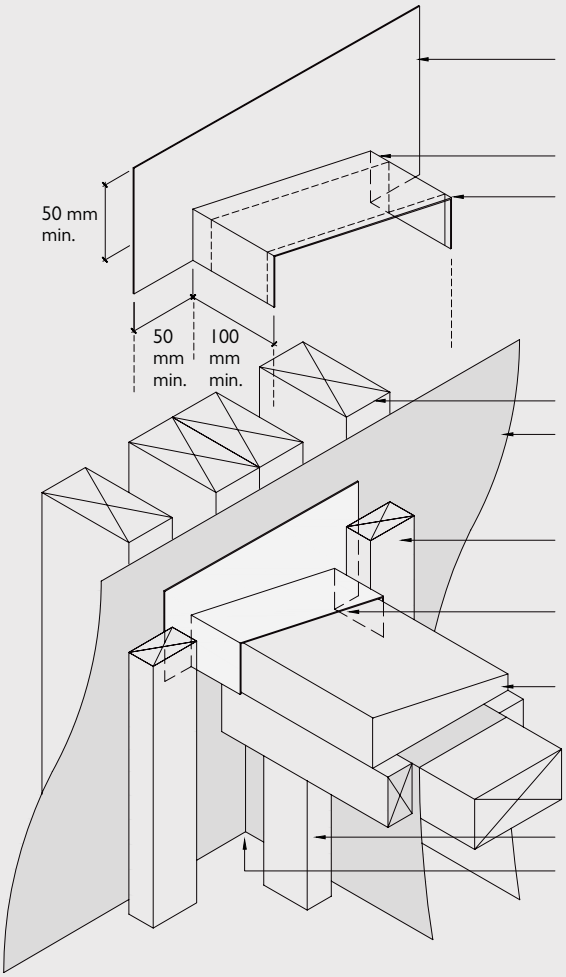

Metal saddle flashing installed behind the cladding line

Continuous lines of sealant

Continuous lines of sealant

Wall framing

Building underlay

Position cavity batten to form clear channel between sloped timber capping and batten

Flexible flashing tape dressed up and securely adhered to wall underlay at rear of cavity
Dress 50 mm minimum down vertical face of battens

Sloping packer to extend across cavity with 5° minimum fall to interior side

Cavity batten

Drain channel formed in corner

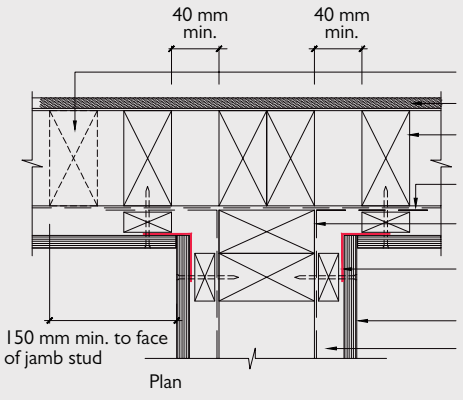

Plan

Window trimming stud

Wall lining

Wall framing

Building underlay

Parapet underlay continuous around corner

Shadowclad 90° internal corner flashing

Shadowclad®

Cavity batten

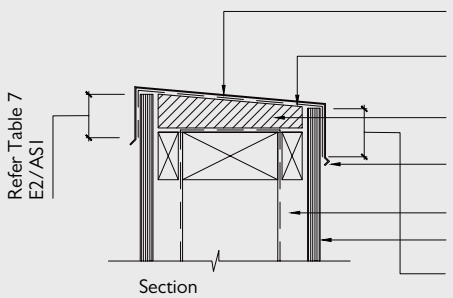

Section

Metal saddle capping flashing.
5° minimum slope (1:12) to interior line

Building underlay to provide separationpan between capping and timber

Sloping timber packer extends across cavity both sides

Bird's beak edge where used as ballustrade capping

Cavity batten

Shadowclad

Refer Table 7 E2/AS1

Note:
1. Treat all cut edges with Soudal® Metalex® Clear

KDC - Approved Building Consent Document - BC210608_SD_ISSUED - Pg 89 of 125 - 29/09/2021 - vsingh

SC054: Shadowclad Balustrade to Wall Junction (Cavity)

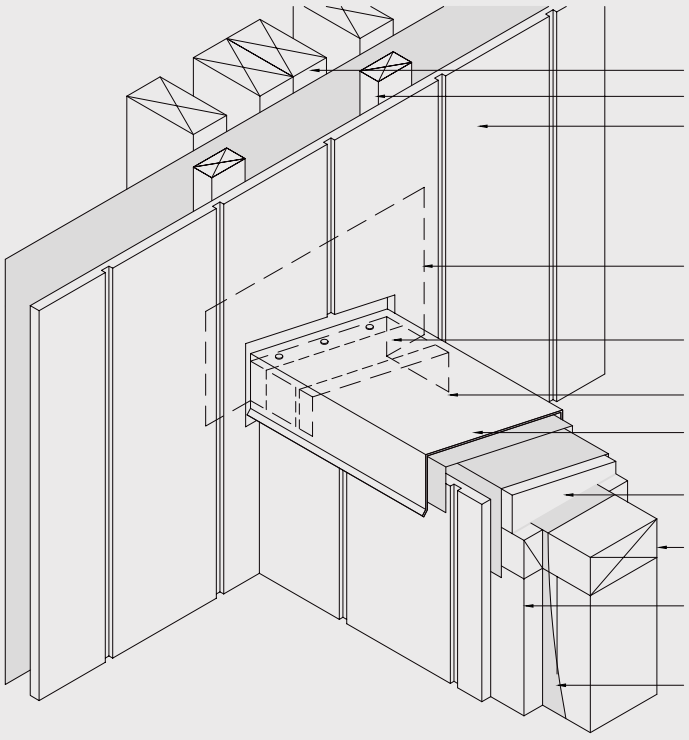

Note:
1. Treat all cut edges with Soudal® Metalex® Clear

KDC - Approved Building Consent Document - BC210608_SD_ISSUED - Pg 90 of 125 - 29/09/2021 - vsingh

SC056: Shadowclad Junction with Wall for Cantilevered Deck (Cavity)

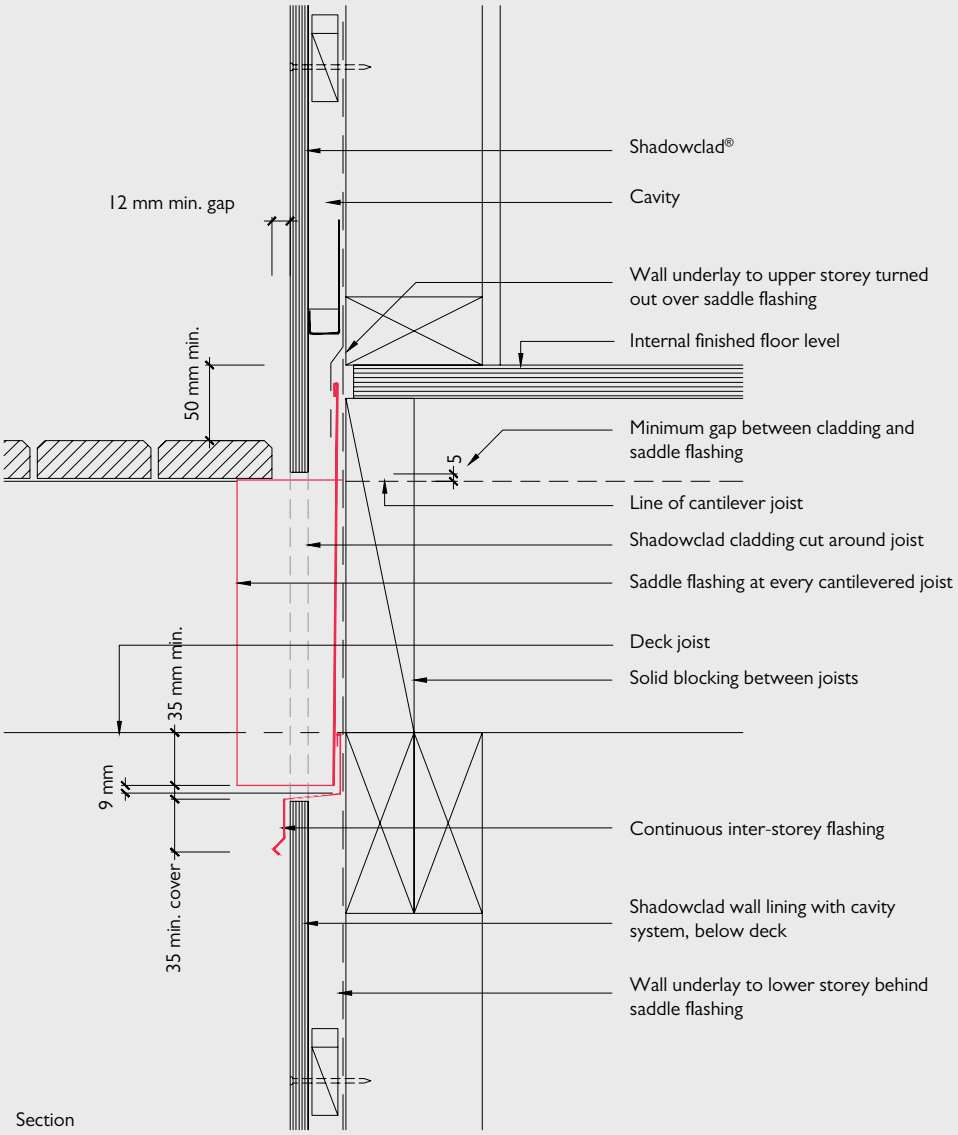

Section

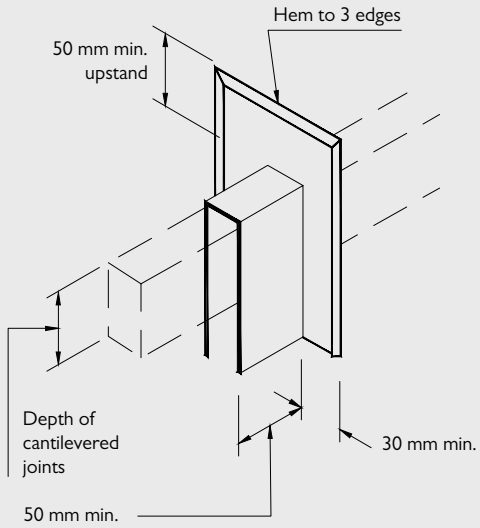

Saddle flashing 3D detail

Note:
1. Building wrap at back of cavity shall be taped around joist penetration
2. The back of the saddle flashing shall be positioned behind the cladding
3. Saddle flashing terminates over inter-story flashing
4. Treat all cut edges with Soudal® Metalex® Clear

KDC - Approved Building Consent Document - BC210608_SD_ISSUED - Pg 91 of 125 - 29/09/2021 - vsingh

SC058: Shadowclad Detailing for Enclosed Balustrade (Cavity)

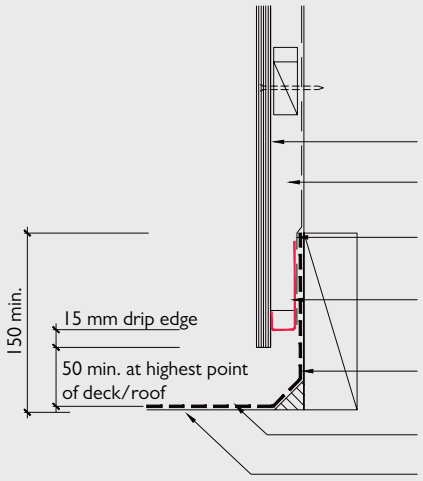

Shadowclad®

Cavity

Wall underlay dressed over deck membrane upstand

75 mm minimum upstand cavity base closure vent strip. Position to give 15 mm drip edge to cladding

Fully supported membrane upstand

Deck membrane

Deck structure

Note:
1. Cut edges should be placed at the top of the sheet to avoid rain drips soaking into cut end grains
2. Treat all cut edges with Soudal® Metalex® Clear
3. Priming the bottom edge and back (rear) of the sheets to a height 150 mm is required

KDC - Approved Building Consent Document - BC210608_SD_ISSUED - Pg 92 of 125 - 29/09/2021 - vsingh

5.0 COATING & APPLICATION – EXTERIOR CLADDING

5.1 SURFACE PREPARATION

- Shadowclad is manufactured, treated and stored in dry conditions at CHH Ply manufacturing facilities.
  The H3 treatment provides temporary repellence to mould prior to on site coating, however it remains the applicators responsibility to ensure the surface is dry and free from dust and mould prior to coating.
- If Shadowclad has been exposed to external weathering for over 3 months wash surfaces with a mild detergent solution to remove any dirt, dust, mould or sea spray prior to coating.
- If recoating, remove loose, flaking or unsound coatings and wash walls prior to recoating.
- The Shadowclad surface must be dry prior to applying any surface coating.

5.2 COATING APPLICATION

- If sheets feel greasy to touch, separate and place in a dry, well ventilated area to allow any residual solvents from the treatment process to flash off prior to applying coatings.
- **Shadowclad is envelope preservative treated. Where sheets are cut, cut edges must be coated with a brush on timber preservative in accordance with the relevant manufacturer's instructions. Soudal® Metalex® Clear is recommended. Failure to properly apply preservative to cut edges will negatively affect the durability of cut panels.**
- Coatings should be applied by brush to ensure adequate coating film build is achieved. Application via roller or spray is not recommended.
- Shadowclad Natural panels should be coated within 3 months of installation.
- Priming of sheet edges and on the rear of the sheet to a height of 150mm is considered good practice, and required at the base of all sheets including above window and door joinery and horizontal flashings.
  - Shadowclad Ultra sheets are coated on the rear to a height of 150mm (minimum) to meet this requirement.
- A minimum total coating system film build of 90 microns is recommended when painting or using film forming stains, including a minimum 30 micron thickness per coat, being mindful of achieving an adequate coating in the decorative grooves.
- For detailed advice on surface preparation, coating product suitability and general coating practice always refer to the coating manufacturer prior to application.

5.3 COATING SELECTION

The following coating information should be treated as a generic guide to coating systems typically used with Shadowclad exterior cladding. The selection, application and maintenance of coatings is the responsibility of building owners and the professionals that they engage. For advice on specific coating products and their suitability for use on Shadowclad always refer to the coating manufacturer.

It is important to note regardless of the cladding materials selected there will always be a level of coating maintenance required to ensure the cladding material is sufficiently protected from the elements and maintains the desired appearance.

Paints & Film Forming Stains

Three coats (1 undercoat, 2 top coats) of a good quality, 100% acrylic paint system with a light reflectance value (LRV) of 50% or greater (i.e. light colours) which is regularly maintained will provide the highest level of protection and durability for Shadowclad and is likely to require the least amount of coating maintenance over the life of the cladding.

Dark colours (LRV of below 50%) increase heat and stress on the panel surface, reducing the panels overall lifespan and increasing the level of coating maintenance required to maintain an acceptable visual appearance. For this reason CHH does not support the use of dark colours on Shadowclad exterior cladding.

Some film forming stains (i.e. coatings with the consistency of paint but with an appearance similar to penetrating stains) may offer similar protection qualities to paints however advice and assurance should be sought from the coating manufacturer as to their suitability for use with Shadowclad prior to application.

Where paints or film forming stains are to be used, Shadowclad Ultra is recommended. Shadowclad Ultra features a factory applied performance coating which in most cases eliminates the use of time consuming wet primers. (Refer Table 10).

Shadowclad Natural can also be used with paint however a conventional wet primer is required as part of the coating manufacturers overall system specification.

Penetrating Stains

Penetrating stains show the natural texture and character of timber and are widely used on Shadowclad exterior cladding. Penetrating stains offer less protection for panels from exterior weathering than paints and film forming stains which are considerably thicker in surface film build. Due to their translucency, penetrating stains are likely to require additional coating maintenance during the panel's life to maintain an acceptable visual appearance. Penetrating stains should only be used on Shadowclad Natural and are not recommended for use on Shadowclad Ultra.

CHH Ply does not recommend the use of linseed oil based coating which have the potential to promote mould growth in this product.

KDC - Approved Building Consent Document - BC210608_SD_ISSUED - Pg 93 of 125 - 29/09/2021 - vsingh

Clear Coatings & Uncoated Shadowclad

If Shadowclad is left uncoated or is clear coated in exterior applications the long term aesthetics of the board will be significantly reduced. While the product will meet durability and weather tightness requirements under E2/AS1 a high visual appearance will not be achieved in the long term.

Face Checking

Face checks are lengthwise separations of wood fibres in the face veneer of the plywood. They result from the normal swelling and shrinking of wood as it gains and loses moisture which is exacerbated by darker colours. It is important to realise that these checks are superficial, being confined to the face veneer. They do not alter the structural integrity of the plywood in any way. If you are the specifier, it is important to discuss these issues with your client before finalising colour choice. If checking occurs, repaint with a good quality, 100% acrylic exterior house paint in accordance with the manufacturer's instructions, thoroughly working paint into the face checks with a paint brush.

Table 10: Coating System for Shadowclad Ultra

Within 3 Months of Erection	**Ensure the panel is clean and dry prior to top coating. Top coat with two coats of premium 100% acrylic exterior house paint.**
OR	
Within 3 to 6 Months of Erection	**Wash the surface with a mild detergent solution to remove any chalky material prior to top coating. Top coat with two coats of premium 100% acrylic exterior house paint.**

Note: For best results.

i/ allow 24 hours between coats.

ii/ use a light coloured paint system, LRV above 50%.

iii/ Recommend panel be washed down prior to painting to remove any sea salt spray or dirt deposits.

iv/ Minimum total coating film build of 90 microns is recommended, including a minimum 30 microns per coat.

5.4 COATING REQUIREMENTS IF RUN OFF IS USED FOR DRINKING WATER

Chemical manufacturers recommend that any run-off from treated surfaces should not be used for drinking water. Unsealed (e.g. unpainted) plywood claddings should not be used in situations where run-off directly from such claddings is collected in water tanks for drinking water. Ensure selected coatings act as a sealant and refer to the coating manufacturer's Safety Data Sheets to confirm specified coatings are suitable for use in these applications.

KDC - Approved Building Consent Document - BC210608_SD_ISSUED - Pg 94 of 125 - 29/09/2021 - vsingh

6.0 MAINTENANCE

All cladding materials, including Shadowclad, require careful and regular product maintenance by the building owner throughout the cladding's normal service life to ensure long term durability and to maintain visual aesthetics.

Maintenance is the responsibility of the building owner. CHH will not be responsible for rectifying issues arising from a failure to carry out required maintenance in accordance with the guidance below.

Claddings:

At a minimum, Shadowclad should be maintained by:

- Regularly washing it down (at least annually) with a mild detergent or solution to remove surface dirt, moss, mould, and sea spray.
- Inspect on at least a yearly basis paying particular attention to sheet joints, corners and bases.
- Keep dirt, soil or leaf build-up at least 150mm away from the base of panels.
- Clean spouting and downpipes as required, so that stormwater is not overflowing onto the cladding.
- Repaint as soon as the first sign of coating deterioration is identified in accordance with the coating manufacturer's specifications (including edges and sheet bottoms).
- Panel recoating requirements may vary depending on climate, orientation to the sun, coating type and coating colour selected.
- Maintain the exterior envelope and connections including joints, penetrations, flashings, heat pumps, and sealants that may provide a means of moisture entry beyond exterior cladding to comply with the requirements of the NZBC Clause E2 - External Moisture.
- Prune back vegetation which is close to or touching the building as well as ensuring the NZBC ground clearance requirements are maintained especially where gardens are concerned.
- **Do not** use water blasters to wash down the cladding.

Flashings:

- Flashings should be periodically cleaned on a similar basis to the glass in windows.
- Clean Shadowclad flashings with a diluted solution of mild liquid detergent avoiding excessively hot solutions. Use a soft bristle brush. **Do not** use abrasive tools or cleaners on the coating.
- After cleaning, rinse thoroughly with fresh water. **Do not** use strong solvent type cleaners. Where the use of solvents is required, such as cleaning paint spills, use nothing other than methylated spirit. Ensure contact time is as short as possible, and rinse the solvent cleaner thoroughly from the surface with copious amounts of quality drinking water.
- Where cavity base closures are installed, ensure drainage holes are kept clear.

Also, refer to the Shadowclad Information Bulletin: Shadowclad Maintenance March 2021.

KDC - Approved Building Consent Document - BC210608_SD_ISSUED - Pg 95 of 125 - 29/09/2021 - vsingh

7.0 FREQUENTLY ASKED QUESTIONS

Q: Where can Shadowclad be used?
A: Shadowclad can be used as both exterior cladding or as an internal lining (moisture free areas only). For interior linings untreated Shadowclad should be used. For exterior cladding H3 treated Shadowclad is required.

Q: Do I have to re-treat cut edges of Shadowclad panels?
A: H3 treated Shadowclad is envelope preservative treated. All cuts made in treated plywood **must** have a brush on preservative treatment applied fully to the cut area. CHH Ply recommends the use of Soudal® Metalex® Clear.

Q: When used as an exterior cladding what are the durability expectations of Shadowclad?
A: Under the NZBC Shadowclad (when used as an exterior cladding) is required to meet a 15 year minimum durability level.

To achieve a 15 year durability Shadowclad must be:

- H3 preservative treated.
- Uncoated Shadowclad will meet the durability and weathertightness requirements, but a high visual appearance will not be achieved in the long term.
- Coated with a good quality penetrating stain, film forming stain or paint system.
- Coatings must be regularly maintained as part of a normal building maintenance program throughout the life of the building.

Shadowclad is not recommended to be left uncoated when used as an exterior cladding.

Note – durability according to the NZBC refers to the products ability to continue to perform its primary function as protection for the building structure. Appearance including the performance of the coating product is not covered under the NZBC durability requirements.

Q: Can Shadowclad, when used as an exterior cladding, be coated in dark colours?
A: While dark colours (coatings with an LRV of below 50%) will achieve a 15 year durability however customers must expect an increased level of recoat and general product maintenance compared to where light coating colours are used. For this reason CHH does not support the use of dark colours on Shadowclad exterior cladding.

The greatest level of cladding protection and least amount of coating maintenance can be achieved by using a good quality paint system (applied as per the coating manufacturers specifications) with an LRV of 50% or greater and a minimum total coating system film build of 90 microns, including a minimum 30 micron thickness per coat. For further information on coatings always refer to the applicable coating manufacturer's specification material.

Q: Does Shadowclad comply with the NZBC Requirements?
A: Shadowclad has been tested in accordance with E2/VMI and AS/NZS 4284 "Testing of Building Facades" for compliance with the NZBC requirements and has been BRANZ appraised for use in cavity fix construction.

Q: In the Shadowclad exterior flashing range can I colour the flashings to match the colour of my building?
A: Shadowclad aluminium exterior flashings are available in either anodised or mill finishes. Anodised flashings are silver in colour and can be installed immediately. Mill finished flashings can be powder coated to specific colours by the customer.

Q: Does face checking affect the performance of Shadowclad?
A: Face checks are lengthwise separations of wood fibres in the face veneer of the plywood. They result from the normal swelling and shrinking of wood as it gains and loses moisture which is exacerbated by darker coloured coatings. These checks are superficial, being confined to the face veneer. They do not alter the structural integrity of the plywood in any way.

Q: Where can I download the Shadowclad Installation APP?
A: The Shadowclad Installation APP can be downloaded from www.chhply.co.nz/site-app or the respective device APP procurement marketplace.

Q: Where can I get a Shadowclad Stick from?
A: Shadowclad Sticks may be ordered by contacting CHH Ply direct by phoning 0800 326 759 or ordering via the Shadowclad APP, the Shadowclad website: www.shadowclad.co.nz, or contacting your local merchant.

8.0 GLOSSARY OF TERMS

Sealant: A flexible neutral cure sealant for filling of spaces/ gaps and weatherproofing that complies with NZBC Acceptable Solution E2/AS1, or sealant covered by a valid BRANZ Appraisal for use as a weather sealing sealant for exterior use. It is the designers' and builders' responsibility to ensure that sealants are fit for purpose and compatible with Shadowclad products and any other building materials or components used within the Shadowclad installation.

Air Seal: A continuous seal fitted between a window or door reveal and the surrounding wrap and associated tape enclosing wall framing to prevent the flow of air into the building interior. Air seal must be weathertight so that moisture is not able to access the structure. Refer to NZBC E2/AS1 for further detail.

Foam Bond Breaker: A tape that is polyethylene backed that prevents "3-Point" adhesion mating surfaces that ensures that the sealant only attaches to two surfaces (and not the third which would create an anchor point preventing the sealant moving as its designed to).

PEF Rod: A foam formed polyethylene "noodle" that is designed to be inserted between two surfaces. Should have a 25-33% larger diameter than the gap/space you are inserting it into.

Soudal® Metalex® Clear: A supplementary preservation treatment that preserves the treatment envelope of timbers with a Class H3.1 and above.

KDC - Approved Building Consent Document - BC210608_SD_ISSUED - Pg 96 of 125 - 29/09/2021 - vsingh

9.0 REFERENCES & SOURCES OF INFORMATION

- New Zealand Building Code (NZBC).
- AS/NZS 2269:2012 "Plywood Structural".
- AS/NZS 1604.3:2010 "Specification for Preservative Treatment, Part 3: Plywood".
- NZS 3602:2003 "Timber and Wood-Based Products for use in Buildings".
- AS/NZS 4284:2008 "Testing of Building Facades".
- NZS 3603:1993 "Timber Structures Standard".
- NZS 3604:2011 "Timber Framed Buildings".
- AS 3715:2002 "Metal Finishing – Thermoset powder coating for architectural application of aluminium and aluminium alloys".
- NZBC Clause E1 Surface Water.
- NZBC Acceptable Solution, E1/AS1.
- NZBC Clause E2 External Moisture.
- NZBC Acceptable Solution, E2/AS1.
- NZBC Clause E3 Internal Moisture.
- NZBC Acceptable Solution, E3/AS1.
- NZBC Clause B2 Durability.
- NZBC Acceptable Solution, B2/AS1.
- Product Technical Statement.
  – Shadowclad® for Cavity Construction.
- Ecoply® Specification and Installation Guide.
- Ecoply® Barrier Specification and Installation Guide.
- CHH Ply technical notes – downloadable from www.chhply.co.nz/librarytools/.
- Safety Data Sheet.
  - SDS Shadowclad Azole Treated Plywood.
  - SDS Shadowclad CCA Treated Plywood.
  - SDS Stainless Steel flashings.
  - SDS Aluminium flashings.
  - SDS Shadowclad Ultra CCA Pre-primed Treated Plywood.
  - SDS Shadowclad Ultra LOSP Pre-primed Treated Plywood.
- Producer Statement – Compliance for Surface Treated Aluminium Products.
- Window Association of New Zealand (www.wanz.org.nz).
- APA (www.buildabetterhome.org).
- EWPAA (www.ewp.asn.au).
- BRANZ Appraised 764 – Shadowclad® Cavity Fixed Cladding System.
- BRANZ Recommendations for Building Maintenance.

Standards can be purchased online at www.standards.co.nz.

Building Code Compliance Documents can be downloaded free of charge at www.building.govt.nz/building-code-compliance/.

Line drawings within this literature can be downloaded from www.chhply.co.nz/librarytools/.

10.0 LIMITATIONS

The information contained in this document is current as at February 2021 and is based on data available to CHH Ply at the time of going to print.

All photographic images are intended to provide a general impression only and should not be relied upon as an accurate example of Shadowclad products installed in accordance with this document or the NZBC compliance documents.

This publication replaces all previous CHH Ply design information and literature relating to Shadowclad structural plywood products and flashings installed using a drained and vented cavity. CHH Ply reserves the right to change the information contained in this document without prior notice. It is your responsibility to ensure that you have the most up to date information available, including at the time of applying for a building consent. You can call toll free on 0800 326 759 or visit www.chhply.co.nz to obtain current information.

CHH Ply has used all reasonable endeavours to ensure the accuracy and reliability of the information contained in this document. However, to the maximum extent permitted by law, CHH Ply assumes no responsibility or liability for any inaccuracies, omissions or errors in this information nor for any actions taken in reliance on this information.

KDC - Approved Building Consent Document - BC210608_SD_ISSUED - Pg 97 of 125 - 29/09/2021 - vsingh

11.0 SHADOWCLAD STICK USER GUIDE

CHH Ply developed the Shadowclad Stick, an installation tool for Shadowclad, to remove the need for builders to develop their own 'jigs' and ensure that critical clearances, nail spacings, etc. are applied during the installation of Shadowclad sheets.

The Shadowclad Stick does not replace the need to follow good building practice and the requirement to read and understand the Shadowclad Specification & Installation Guides and the NZBC.

11.1 THE COMPONENTS OF THE SHADOWCLAD STICK

The Shadowclad Stick has been developed specifically to deal with expansion gaps, catering for both Shadowclad texture and Shadowclad groove as well as horizontal and vertical joints. The Shadowclad Stick also provides guidance around nail spacings to suit:

- 150 mm spacing around sheet edges and 300 mm to intermediate studs and nogs;
- 75 mm distance for the bottom of the sheet; and
- 20 mm for the top of the sheet.

Figure 1: The Shadowclad Stick

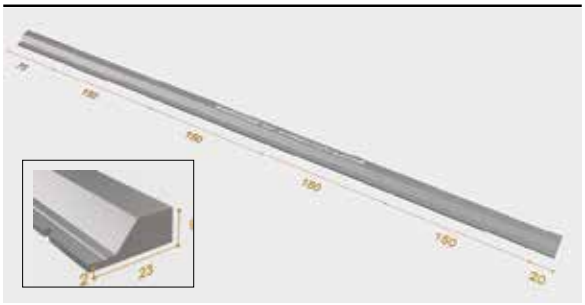

11.2 VERTICAL JOINTS

The Shadowclad Stick is contoured to be 2 mm thick on one edge and 9 mm thick on the other. At 695 mm long, the Shadowclad Stick can be placed in the middle of sheets to provide minimum clearance requirements. Figure 2 illustrates the 2 mm expansion gap required for Shadowclad texture together in use with the Shadowclad Stick. Figure 3 illustrates the 9 mm expansion gap required for Shadowclad Groove, together in use with the Shadowclad Stick.

Figure 2: Shadowclad Texture - 2 mm Vertical Expansion Gap

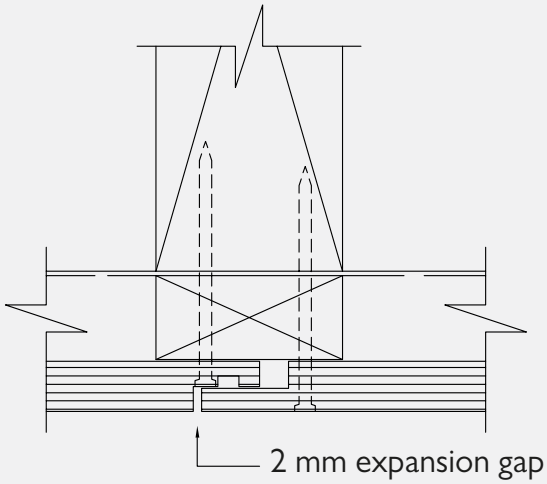

Refer to SC006 for the installation detail

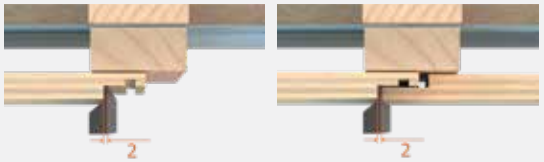





KDC - Approved Building Consent Document - BC210608_SD_ISSUED - Pg 98 of 125 - 29/09/2021 - vsingh

Figure 3: Shadowclad Groove - 9 mm Vertical Expansion Gap

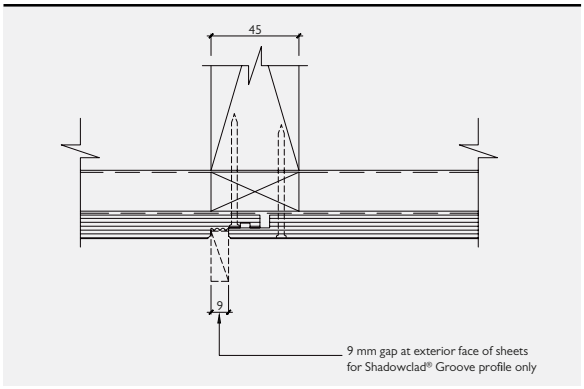

Refer to SC008 for the installation detail

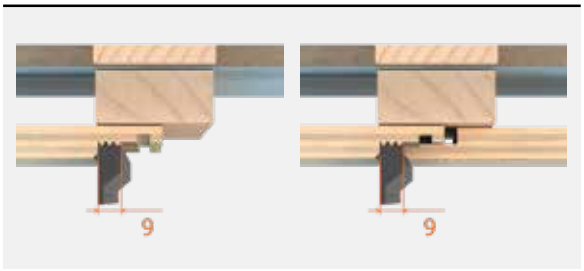

The 2 mm thick edge of the Shadowclad Stick can also be used to measure the 2 mm expansion gap required between vertical flashings and Shadowclad as detailed in Figure 4 (Vertical Top Hat Flashing and 'W' Flashing similar).

Figure 4: 2 mm Vertical Expansion Gap on Shadowclad External Box Corner

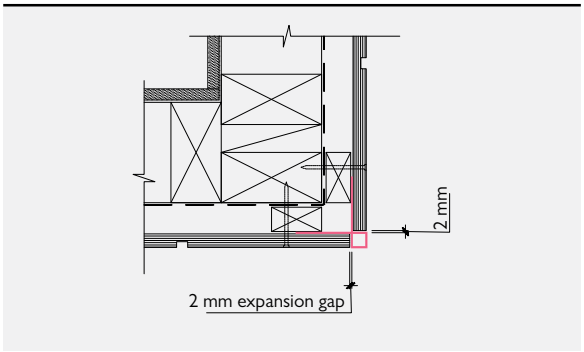

Refer to SC020 for the installation detail

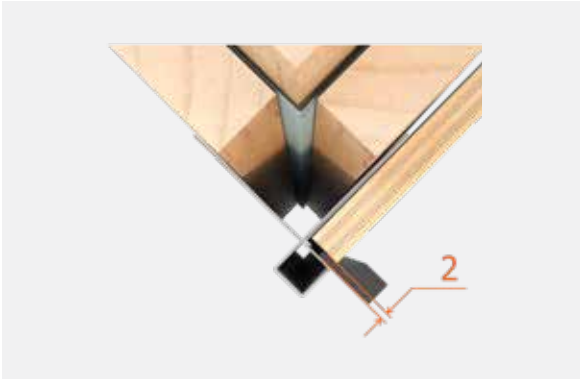

11.3 HORIZONTAL JOINTS

The 9 mm thick edge on the Shadowclad Stick can also be used to provide the appropriate clearance between the top of the horizontal flashings and bottom of sheets as detailed in Figure 5 (Window head and metre box similar) as noted in the detail SC016.

Figure 5: Shadowclad 9 mm Gap at Horizontal 'Z' Flashing

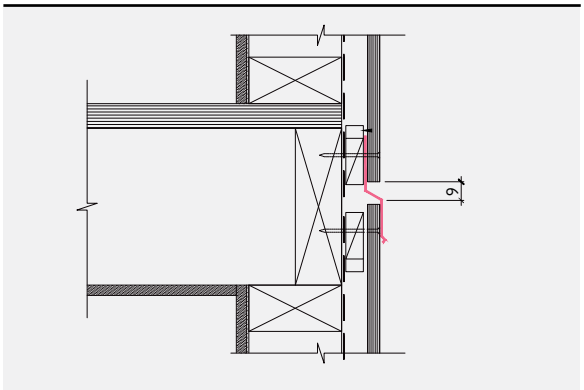

Refer to SC016 for the installation detail

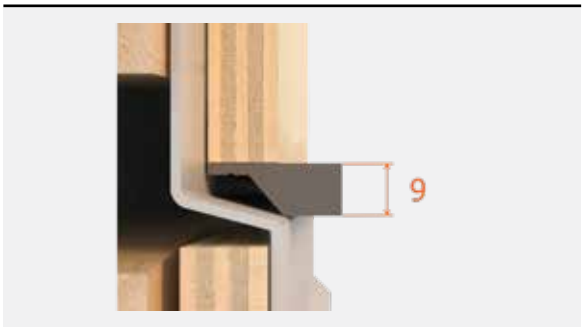

KDC - Approved Building Consent Document - BC210608_SD_ISSUED - Pg 99 of 125 - 29/09/2021 - vsingh

11.4 FASTENER LOCATIONS

The Shadowclad Stick has been detailed to support the correct placement of fastenings corresponding to the Shadowclad Specification & Installation Guides.

11.5 NAIL SPACING'S

Section 4.7 notes "Standard fixing pattern: fasten sheet edges at 150mm centres and within the panel on all supports at 300mm centres". Figure 6 details the use of the Shadowclad Stick at sheet edges with 150 mm nail spacing provided for between half rounds spaced at exactly 150 mm centres. Figure 7 details the use of the Shadowclad Stick at the centre of the sheet to provide fixings at 300 mm centres, whilst figure 8 provides a pictorial representation of the Shadowclad fastener layout.

Figure 6: Sheet fastening around sheet edges at 150 mm

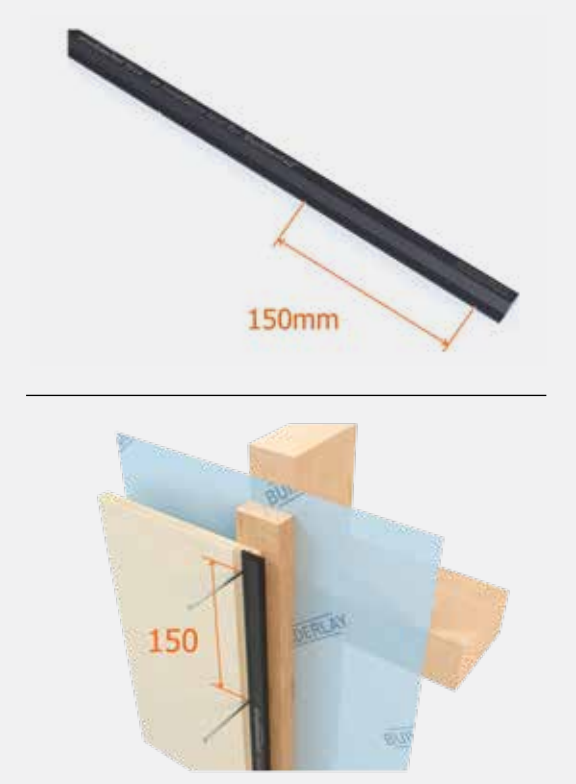

Figure 7: Sheet fastening within the panel at 300 mm



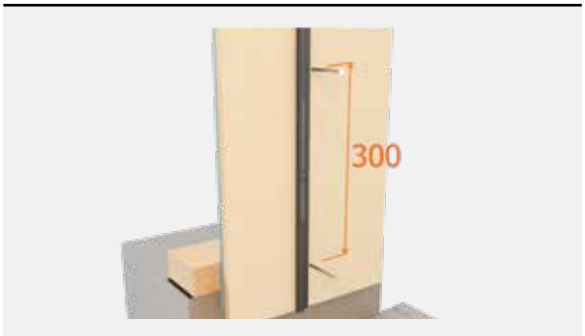

Figure 8: Pictorial representation of nail spacings for sheet edges and intermediate supports

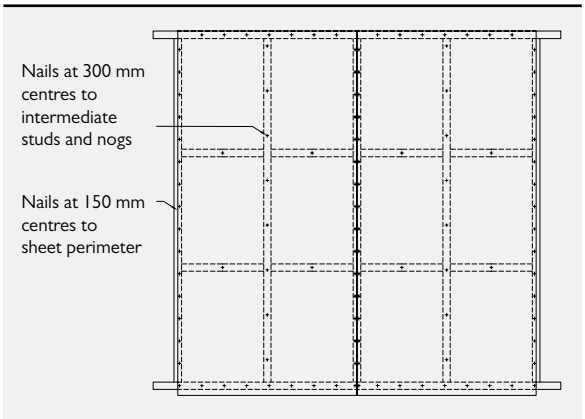

11.6 NAILING OF THE SHIP LAP

Nailing of the ship lap is an important step in ensuring the Shadowclad system's weathertightness. Each Shadowclad sheet is independently nailed off to allow for expansion and contraction of the sheets over their service life, whilst maintaining a weathertight connection. The Shadowclad Stick has two distinct locating devices for the ship lap joint. Figure 9 illustrates the location of the ridge, exactly 13 mm from the edge of the Shadowclad Stick, in combination with the diameter 3 mm half round provides the exact location for nails within the underlap portion of the ship lap. The ridge should be lined up with the edge of the underlap edge of the sheet. Figure 10 details the use of the Shadowclad Stick in this application.

The Shadowclad Stick is exactly 23 mm wide as detailed in Figure 11. To ensure that the Shadowclad sheets are fixed independently of each other, the top of the ship lap should be fixed 23 mm from the edge. The Shadowclad Stick should be placed along the sheet and nailed at 150 mm centres as detailed in Figure 12.

Figure 9: Shadowclad Stick 13 mm dimension

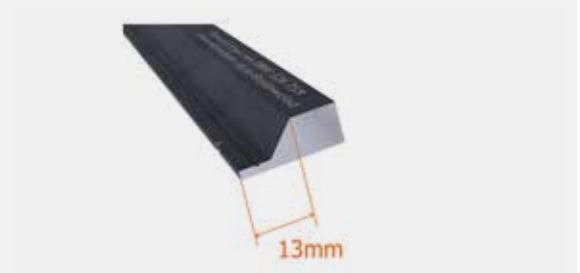

KDC - Approved Building Consent Document - BC210608_SD_ISSUED - Pg 100 of 125 - 29/09/2021 - vsingh

Figure 11: Shadowclad Stick 23 mm dimension



Figure 12: Shadowclad Stick and ship lap nailing

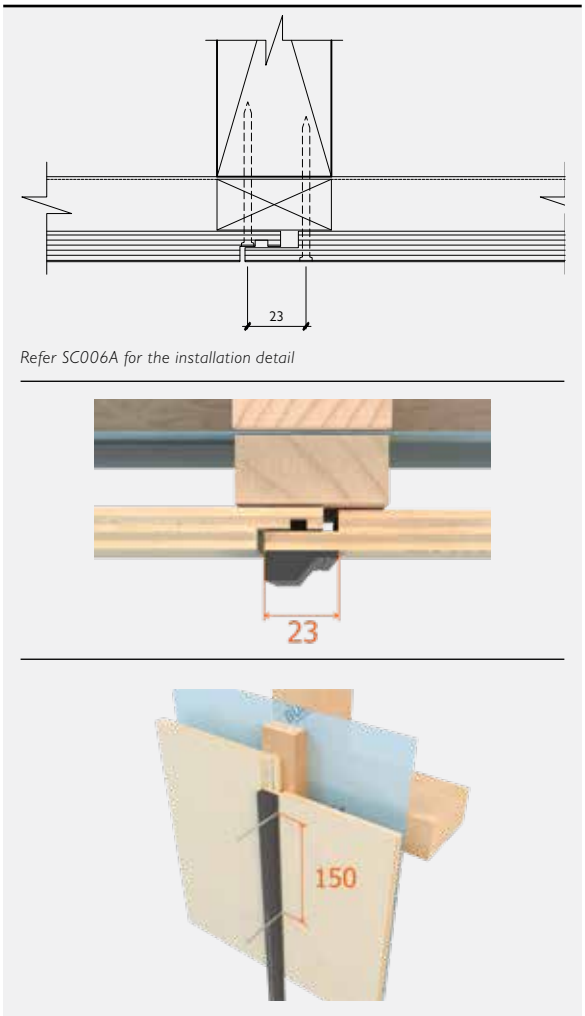

11.7 END DISTANCE FASTENER LOCATIONS

Compliance with the end distance nailing is an important step in achieving the weathertight solution. The Shadowclad Stick has two end of sheet identifiers, including a 75 mm edge distance from the bottom of the Shadowclad Stick to the first nail locator as detailed in Figure 13. The top of the Shadowclad Stick has a 20 mm end distance from the top of the Shadowclad Stick to the first nail locator, to suit nailing of the top of the sheet to the centre of the top plate, as detailed in Figure 14.

11.8 END DISTANCE FASTENER LOCATIONS

Compliance with the end distance nailing is an important step in achieving the weathertight solution. The Shadowclad Stick has two end of sheet identifiers, including a 75 mm edge distance from the bottom of the Shadowclad Stick to the first nail locator as detailed in Figure 13. The top of the Shadowclad Stick has a 20 mm end distance from the top of the Shadowclad Stick to the first nail locator, to suit nailing of the top of the sheet to the centre of the top plate, as detailed in Figure 14.

Figure 13: 75 mm end distance

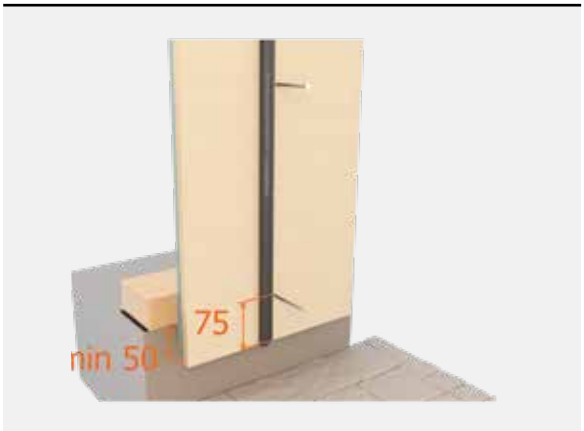

Figure 14: 20 mm end distance



11.9 SHADOWCLAD SPECIFICATION & INSTALLATION GUIDE & SHADOWCLAD APP

The Shadowclad Stick has been developed to compliment the Shadowclad Specification & Installation Guides and the Shadowclad APP all of which are available to download from www.shadowclad.co.nz.

KDC – Approved Building Consent Document – BC210608 SD ISSUED – Pg 101 of 125 – 29/09/2021 - vsingh

SHADOWCLAD KEY INSTALLATION & DESIGN POINTS

EXTERIOR CLADDING APPLICATIONS

The following tasks are provided to installers to point out key installation and design factors when used as an exterior cladding. These do no detract from the requirements to read and understand this literature as a whole.

Task	Tick when checked
Prior to Specification and Installation	
Read the Shadowclad Specification and Installation Guide in its entirety	☐
Framing Plan	
Framing setout drawings to suit Shadowclad fixing and installation guidelines	☐
Sheet Cuts	
Coat all sheet cuts with a preservative timber treatment such as Soudal® Metalex® Clear	☐
After applying Soudal® Metalex® Clear, apply the surface coating (e.g. paint or stain) to cut edges	☐
Place uncut edge to bottom	☐
Fastener Material Type	
Galvanised fasteners or better used (Stainless steel annular groove nails required in sea spray zones and with H3.2 CCA treated Shadowclad Ultra)	☐
Sheet Fastener Pattern	
Around sheet edge – maximum 150mm centre spacing	☐
Within sheet body – maximum 300mm centre spacing	☐
Horizontal Sheet Joints	
Minimum 9mm separation gap between sheets above all Horizontal 'Z' flashings	☐
Prime the bottom of the sheet edge and 150mm up the back (rear) of the sheets	☐
50 mm strip of neutral cure silicon sealant or stop ends at all 'Z' flashing terminations excluding terminations at Shadowclad metal corner flashings	☐
Back flashings or 150 mm overlap to all flashing butt joints	☐
Expansion Gaps Between Sheets (Vertical Sheet Joints)	
Texture Profile Sheets - 2mm gap between vertical edges of sheets	☐
Groove Profile Sheets - 9mm gap (i.e. full groove space) between vertical edges of sheets	☐
Note: Expansion gaps required between vertical edges of sheets to accommodate natural expansion and contraction of sheets	
Ground Clearances	
Paved/Sealed Ground - minimum 100mm distance from the ground to sheet bottom	☐
Broken Ground - minimum 175mm distance from the ground to sheet bottom	☐
Prime the bottom of the sheet 150mm up the back (rear) of the sheet	☐

Refer to the current Shadowclad Specification and Installation Guide for full installation specifications and suggested details.

KDC - Approved Building Consent Document - BC210608_SD_ISSUED - Pg 102 of 125 - 29/09/2021 - vsingh

shadowclad®

BRANZ Appraised
Appraisal No.784 [2017]

KDC - Approved Building Consent Document - BC210608_SD_ISSUED - Pg 103 of 125 - 29/09/2021 - vsingh



CHH PLY

Private Bag 92102
Victoria Street West
Auckland 1142
New Zealand

Freephone: 0800 326 759
Freefax: 0800 746 400

www.chhply.co.nz

March 2021
SHADOWCLAD_V2.0321

JAS-ANZ

PRODUCT CERTIFIED paa ENGINEERED WOOD

ewpaa

NEW ZEALAND MANUFACTURED

CORRUGATE





KDC - Approved Building Consent Document - BC210608_SD_ISSUED - Pg 104 of 125 - 29/09/2021 - vsingh

CORRUGATE

CORRUGATE

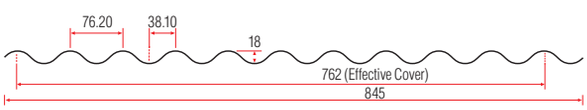

WIDE CORRUGATE

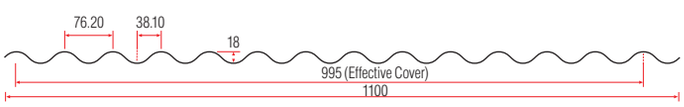

All measurements are in millimetres



Description

Corrugate remains an ageless icon, and as a cost competitive and trend setting roofing and cladding material continues to gain in popularity. Corrugate offers a stylish alternative to today's building designers and home owners alike, allowing creative flair and individuality during the design process.

Product flexibility coupled with a small amount of imagination will ensure a distinct point of difference to other homes and buildings in the vicinity.

Corrugate is available in both standard and wide cover widths. (Wide cover widths subject to minimum quantity).

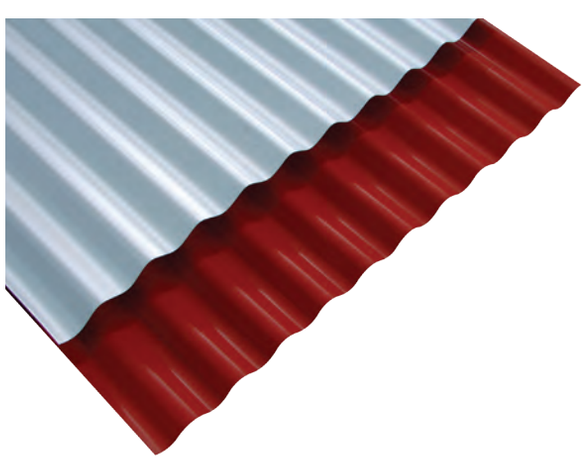

CORRUGATE

KDC - Approved Building Consent Document - BC210608_SD_ISSUED - Pg 105 of 125 - 29/09/2021 - vsingh

Applications

- Residential roofing & cladding
- Rural and lifestyle roofing & cladding
- Commercial roofing & cladding
- Drape/spring curving
- Bull nose
- Horizontal cladding
- Ceilings and linings
- Acoustic ceiling linings
- Fencing

Roof Pitch

In accordance with E2/AS1 of the NZ Building Code, the minimum pitch for Corrugate is 8°. For end lapped sheets or a roof length greater than 18m, contact Roofing Industries for specific advice.

Materials

- Zincalume® Steel: 0.40mm or 0.55mm BMT, AZ150 (150gm/m²) G550 Mpa Yield Stress
- Galvanised Steel: 0.40mm or 0.55mm BMT, Z450 (450gm/m²) G550 Mpa Yield Stress
- Pre-painted COLORCOTE® or COLORSTEEL over Zincalume® 0.40mm or 0.55mm BMT, AZ150 (150gm/m²), G550 Mpa Yield Stress
- Prepainted COLORCOTE® or COLORSTEEL over Galvanised Steel: 0.40mm or 0.55mm BMT ZM275 (275gm/m²) G550 Mpa Yield Stress
- 0.55mm BMT may be supplied as G300 Mpa Yield Stress

For information on Aluminium, Stainless Steel and Copper Corrugate, contact Roofing Industries.

SPECIFICATIONS

Sheet width: 845mm & 1100mm	Sheet coverage: 762mm & 995mm
Sheet length: Any length (Subject to transportation)	Minimum Pitch: 8°

SPAN TABLES (Steel Substrate Material)

Type of Span	Maximum Span (Metres)			Maximum Span (Metres)		
	0.40mm BMT			0.55mm BMT		
	Wind Zone			Wind Zone		
	Low & Medium	High	Very High	Low & Medium	High	Very High
Intermediate	1.200	1.100	0.900	1.600	1.450	1.200
End	0.700	0.700	0.650	0.950	0.950	0.900

Durability

Selection of the correct grade of material and appropriate surface coating is imperative to ensure Corrugate will perform satisfactorily in the environment it is to be installed, and meets the requirements of The NZ Building Code. Environmental Categories and Surface Coating literature is available on request.

Accessories

A full range of matching accessories is available, including Ridging, Ridgecaps, Flashings, Underlays, Insulation, Fasteners, Rotary Roof Ventilators and Rainwater systems.

Translucent and Transparent roofing

Corrugate is also available as glass reinforced, polycarbonate and PVC roofing and cladding.

Fixings and Fasteners

Fixings and fasteners are to be of an approved type, compatible with all materials, the environment and meeting the requirements of the NZ Building Code. Installation is to be in accordance with E2/AS1 and the NZ Metal Roof and Wall Cladding Code of Practice. Further information is available via the www.roof.co.nz website.

Roof Application

Timber Purlins 12 x 50 Timbertite® class 4 screws with neos or 60mm Weatherseal® nails*

Steel Purlins 12 x 45 Steeltite® class 4 screws with neos*

- Fix side laps and every second crest to: Ridge, Hip, Valley, Gutter and Periphery areas
- For the remainder of the roof: Fix Side laps, Miss 2, Hit 1, miss 2 etc

* For sheet lengths 8-18 metres the lower 50% of the roof should be fixed using oversize holes at fastening points and a 30mm EPDM and matching metal profile washer. For sheets in excess of 18 metres refer to our website www.roof.co.nz.

Walling Application

Fix in the pan adjacent to every side-lap over rib and every second pan using Class 4 Timbertites® or Steeltites® and neos as appropriate, ensuring that when the fastener is into timber it is of sufficient length to penetrate the framing by 25mm.

Note: the above recommendations are suitable for steel based materials, for other materials refer to our website www.roof.co.nz.

Curving

Steel substrate Corrugate can be spring curved to the following radius.

0.40mm BMT–12 metres

0.55mm BMT–10 metres

Corrugate can be bullnosed or curved to a minimum radius of 300mm.

Ordering

Roofing Industries staff can provide technical assistance to ensure accurate ordering of roofing and accessories thereby avoiding costly errors. Corrugate is manufactured and delivered cut to length.

Handling and storage

- On delivery, visually inspect sheets for damage.
- Store Corrugate and accessories on evenly spaced and supportive dunnage, clear of the ground and under cover. If packs become wet and the product not used immediately, separate the sheets to allow air circulation and drying.
- Do not drag sheets across each other.
- If protected with strippable plastic film, keep under cover and remove as the product is being installed.

Installation

Prior to commencing your project, please refer to Roofing Industries Handling Storage and Installation Guide, E2/AS1 and the NZ Metal Roof and Wall Cladding Code of Practice. Failure to install the product to industry requirements will void the warranty.

Maintenance

Regular maintenance will extend the life of the roof and accessories. It is strongly advised that areas not receiving regular rain washing should be washed with freshwater on a regular basis. On purchasing your roof it is imperative to request a copy of the maintenance guide(s) and familiarise yourself with industry requirements. Failure to do so can void the warranty.

Warranties

Warranties meet the statutory requirements of the NZ Building Code, are available on request and reflect our New Zealand owned and operated company, test facilities and local climatic conditions. Sample warranties are available at website www.roof.co.nz.

Your distributor

AUCKLAND (Head office)
Roofing Industries Ltd
5 John Glenn Avenue,
North Harbour
PO Box 302-385
North Harbour 0751
Ph: (09) 414 4585
Fax: (09) 414 4586
office@roof.co.nz

WHANGAREI
Roofing Industries (Northland) Ltd
38 Winger Crescent, Kamo,
Whangarei
PO Box 883
Whangarei 0112
Ph: (09) 437 2040
Fax: (09) 437 5010
northland@roof.co.nz

WAIKATO
Roofing Industries (Waikato) Ltd
Unit 4/550 Te Rapa Rd
Te Rapa, Hamilton
PO Box 20281 Te Rapa,
Hamilton 3241
Ph: (07) 849 5115
Fax: (07) 849 2115
waikato@roof.co.nz

TAUPO
Roofing Industries (Taupo) Ltd
1158 Rakaunui Rd
Taupo
PO Box 408
Taupo 3351
Ph: (07) 376 7971
Fax: (07) 376 7972
taupo@roof.co.nz

PALMERSTON NORTH
Roofing Industries (Central) Ltd
653 Tremaine Ave
Palmerston North
PO Box 4584
Palmerston North 4410
Ph: (06) 353 8480
Fax: (06) 353 8470
central@roof.co.nz

SOUTH ISLAND
Roofing Industries Ltd
220a Annex Road
PO Box 6248
Upper Riccarton
Christchurch 8442
Ph: (03) 339 2324
Fax: (03) 339 2325
south@roof.co.nz

Roofing Industries roof.co.nz

It should be noted that this technical data sheet is based around the requirements of E2/AS1 of the NZBC. For buildings or uses that are outside the scope of, or NOT required to comply with E2/AS1 alternative technical data may apply. Please contact Roofing Industries Ltd.

KDC - Approved Building Consent Document - BC210608_SD_ISSUED - Pg 106 of 125 - 29/09/2021 - vsingh

BRANZ Appraised
Appraisal No. 695 [2017]

WATERGATE PLUS WALL UNDERLAY

Appraisal No. 695 (2017)
Amended 01 March 2021
This Appraisal replaces BRANZ Appraisal No. 695 (2010)



BRANZ Appraisals
Technical Assessments of products for building and construction.

Thermakraft
Thermakraft Limited
PO Box 58 112
Greenmount
Auckland
Tel: 09 273 3727
Fax: 09 273 3726
Free phone: 0800 806 595
www.thermakraft.co.nz

BRANZ
BRANZ
1222 Moonshine Rd,
RD 1, Porirua 5381
Private Bag 50 908
Porirua 5240,
New Zealand
Tel: 04 237 1170
branz.co.nz

Product

1.1 Watergate Plus is a fire retardant, flexible synthetic wall underlay for use under direct fixed and non-direct fixed wall cladding on timber and steel-framed buildings. The product is manufactured from coated, non-woven polyolefin and is coloured white.

Scope

Flexible Wall Underlay

2.1 Watergate Plus has been appraised for use as a flexible wall underlay for buildings within the following scope:

- the scope limitations of NZBC Acceptable Solution E2/AS1, Paragraph 1.1 for timber-framed buildings; or,
- the scope limitations of NASH Building Envelope Solutions, Paragraph 1.1 for steel-framed buildings; and,
- with direct fixed absorbent and non-absorbent wall claddings; or,
- with absorbent and non-absorbent wall claddings installed over an 18 mm minimum drained cavity; or,
- with masonry veneer in accordance with NZBC Acceptable Solution E2/AS1 for timber-framed buildings or to NASH Building Envelope Solutions for steel-framed buildings; and,
- situated in NZS 3604 Wind Zones up to, and including, Very High.

Use over Rigid Wall Underlay

2.2 Watergate Plus has been appraised for use as a flexible wall underlay over rigid wall underlays on buildings within the following scope:

- the scope limitations of NZBC Acceptable Solution E2/AS1, Paragraph 1.1 for timber-framed buildings; or,
- the scope limitations of NASH Building Envelope Solutions Paragraph 1.1 for steel-framed buildings; and,
- with absorbent and non-absorbent wall claddings installed over an 18 mm minimum drained cavity; and,
- with masonry veneer in accordance with NZBC Acceptable Solution E2/AS1 for timber-framed buildings or NASH Building Envelope Solutions for steel-framed buildings; and,
- situated in NZS 3604 and NASH Standard Part 2 Wind Zones up to, and including, Extra High.

Readers are advised to check the validity of this Appraisal by referring to the Valid Appraisals listing on the BRANZ website, or by contacting BRANZ.

KDC - Approved Building Consent Document - BC210608_SD_ISSUED - Pg 107 of 125 - 29/09/2021 - vsingh

Specific Design

2.3 Watergate Plus has also been appraised for use on buildings subject to specific weathertightness design. Building designers are responsible for the building design and for the incorporation of Watergate Plus into their design in accordance with the declared properties and the instructions of Thermakraft Limited.

Building Regulations

New Zealand Building Code (NZBC)

3.1 **In the opinion of BRANZ, Watergate Plus, if used, designed, installed and maintained in accordance with the statements and conditions of this Appraisal, will meet, or contribute to meeting the following provisions of the NZBC:**

Clause B2 DURABILITY: Performance B2.3.1 (a) not less than 50 years, B2.3.1 (b) 15 years and B2.3.2. Watergate Plus meets these requirements. See Paragraphs 9.1 and 9.2.

Clause C3 FIRE AFFECTING AREAS BEYOND THE FIRE SOURCE: Performance C3.4 (c). Watergate Plus meets this requirement. See Paragraph 10.1.

Clause E2 EXTERNAL MOISTURE: Performance E2.3.2. When used as part of the cladding system, Watergate Plus will contribute to meeting this requirement. See Paragraphs 12.1 and 12.2.

Clause F2 HAZARDOUS BUILDING MATERIALS: Performance F2.3.1. Watergate Plus meets this requirement.

Technical Specification

4.1 Watergate Plus is a white, 105 g/m^2 non-woven, microporous polyolefin fabric underlay.

4.2 The product is supplied in various sizes. Refer to Table 1. The product is printed with the Watergate Plus logo repeated along the length of the roll and can also be co-branded with custom printing. The rolls are wrapped in clear polythene film.

Table 1: Roll Dimensions

Width (mm)	Length (m)	Coverage (m^2)
1,370	18.5	25
1,370	37.0	50
1,370	73.0	100
2,740	18.5	50
2,740	36.5	100

Accessories

4.3 Accessories used with Watergate Plus which are supplied by the installer are:

- **Fixings** - 6-8 mm staples, large head clouts minimum 20 mm long, self-drilling screws, proprietary underlay fixings, double sided tape (for steel framing) or other temporary fixings to attach the wall underlay to the framing.
- **Wall underlay restraint (timber frame)** - polypropylene strap, 75 mm galvanised mesh or galvanised wire, or vertical cavity battens where required to restrain the wall underlay in accordance with NZBC Acceptable Solution E2/AS1, Paragraph 9.1.8.5.
- **Wall underlay restraint (steel frame)** - polypropylene strap, 75 mm galvanised mesh or galvanised wire, or vertical cavity battens where required to restrain the wall underlay in accordance with NASH Building Envelope Solutions, Paragraph 9.1.9.5. Thermal break sheathing installed in accordance with NASH Building Envelope Solutions Paragraph 11.4.3.2.

Readers are advised to check the validity of this Appraisal by referring to the Valid Appraisals listing on the BRANZ website, or by contacting BRANZ.

KDC - Approved Building Consent Document - BC210608_SD_ISSUED - Pg 108 of 125 - 29/09/2021 - vsingh

Handling and Storage

5.1 Handling and storage of the product, whether on-site or off-site, is under the control of the installer. The rolls must be protected from damage and weather. They must be stored on end, under cover, in clean, dry conditions and must not be crushed.

Technical Literature

6.1 Refer to the Appraisals listing on the BRANZ website for details of the current Technical Literature for Watergate Plus. The Technical Literature must be read in conjunction with this Appraisal. All aspects of design, use, installation and maintenance contained in the Technical Literature and within the scope of this Appraisal must be followed.

Design Information

7.1 Watergate Plus is intended for use as an alternative to conventional building papers which are fixed over timber or steel-framed walls in order to limit the entry of wind into building cavities, and to act as a secondary barrier to wind-driven rain. Refer to Table 2 for material properties.

7.2 The material also provides a degree of temporary weather protection during early construction. However, the product will not make the building weathertight and some wetting of the underlying structure is always possible before the building is closed in. Hence, the building must be closed-in and made weatherproof before moisture sensitive materials such as wall or ceiling linings and insulation materials are installed.

7.3 Watergate Plus must not be exposed to the weather or ultraviolet (UV) light for a total of more than 60 days before being covered by the wall cladding.

7.4 Watergate Plus is suitable for use as an air barrier where walls are not lined, such as attic spaces at gable ends, in accordance with NZBC Acceptable Solution E2/AS1 or NASH Building Envelope Solutions, Paragraph 9.1.4 (c).

7.5 In cavity installations where the cavity battens are installed at greater than 450 mm centres, the wall underlay must be restrained between the battens to prevent the underlay bulging into the cavity space when bulk insulation is installed in the wall frame cavity. Refer to NZBC Acceptable Solution E2/AS1, Paragraph 9.1.8.5 for timber framing or NASH Building Envelope Solutions, Paragraph 9.1.9.5 for steel framing. Wall underlay restraint options include polypropylene strap, 75 mm galvanised mesh or galvanised wire, or vertical cavity battens or thermal break sheathing (steel framing only).

Table 2: Material Properties

NZS 2295 Property	Property Performance Requirement	Actual Property Performance
Absorbency	≥ 100 g/m^2	Pass
Vapour Resistance	≤ 7 MN s/g	Pass
Water Resistance	≥ 20 mm	Pass
pH of Extract	≥ 6.0 and ≤ 9.0	Pass
Shrinkage	≤ 0.5%	Pass
Mechanical	Edge tear and tensile strength	**Edge tear (Average):** Machine direction = 77 N Cross direction = 56 N **Tensile strength (Average):** Machine direction = 2.5 kN/m Cross direction = 1.8 kN/m
Air Barrier	Air resistance: ≥ 0.1 MN s/m^3	Pass. Watergate Plus can be used as an air barrier.

Readers are advised to check the validity of this Appraisal by referring to the Valid Appraisals listing on the BRANZ website, or by contacting BRANZ.

KDC - Approved Building Consent Document - BC210608_SD_ISSUED - Pg 109 of 125 - 29/09/2021 - vsingh

Claddings

7.6 Watergate Plus is suitable for use under wall claddings as a wall underlay as called up in NZBC Acceptable Solution E2/AS1, Table 23 on timber-framed buildings and NASH Building Envelope Solutions Table 23 on steel-framed buildings, including non-absorbent wall claddings such as vinyl and metal-based weatherboards in direct fixed situations.

Stucco Plaster

7.7 Watergate Plus is suitable for use as a non-rigid backing material for stucco plaster in accordance with the requirements of NZBC Acceptable Solution E2/AS1, Paragraph 9.3.5.1 for timber framing or NASH Building Envelope Solutions Paragraph 9.3.5.1 for steel framing. The underlay must be supported with 75 mm galvanised mesh or plastic tape or wire at 150 mm centres run across the cavity battens to limit deflection to a maximum of 5 mm.

7.8 Watergate Plus may also be used as a slip layer over rigid backings for stucco plaster in accordance with the requirements of NZBC Acceptable Solution E2/AS1, Paragraph 9.3.3.1 b) for timber framing or NASH Building Envelope Solutions Paragraph 9.3.3.1 b) for steel framing.

Structure

8.1 Watergate Plus is suitable for use in all Wind Zones of NZS 3604 and NASH Standard Part 2 up to, and including, Very High when used as a stand-alone flexible wall underlay, and all Wind Zones of NZS 3604 up to, and including, Extra High when used as an overlay for rigid wall underlays.

Durability

9.1 Watergate Plus meets code compliance with NZBC Clause B2.3.1 (a) not less than 50 years for wall underlays used where the cladding durability requirement or expected serviceable life is not less than 50 years, e.g. behind masonry veneer, and code compliance with NZBC Clause B2.3.1 (b) 15 years for wall underlays used where the cladding durability requirement is 15 years.

Serviceable Life

9.2 Provided it is not exposed to the weather or UV light for a total of more than 60 days, and provided the exterior cladding is maintained in accordance with the cladding manufacturer's instructions and the cladding remains weather resistant, Watergate Plus is expected to have a serviceable life equal to that of the cladding.

Control of Internal Fire and Smoke Spread

10.1 Watergate Plus has an AS 1530 Part 2 flammability index of not greater than 5 and therefore meets the requirements of NZBC Acceptable Solution C/AS2, Paragraph 4.17.8 b), for the surface finish requirements of suspended flexible fabric used as an underlay to exterior cladding that is exposed to view in occupied spaces.

Prevention of Fire Occurring

11.1 Separation or protection must be provided to Watergate Plus from heat sources such as fireplaces, heating appliances, flues and chimneys. Part 7 of NZBC Acceptable Solutions C/AS1, C/AS2 and NZBC Verification Method C/VM1 provide methods for separation and protection of combustible materials from heat sources.

External Moisture

12.1 Watergate Plus must be used behind claddings that meet the requirements of the NZBC, such as those covered by NZBC Acceptable Solution E2/AS1 or NASH Building Envelope Solutions, or claddings covered by a valid BRANZ Appraisal.

12.2 Watergate Plus, when installed in accordance with the Technical Literature and this Appraisal will assist in the total cladding systems compliance with NZBC Clause E2.

Readers are advised to check the validity of this Appraisal by referring to the Valid Appraisals listing on the BRANZ website, or by contacting BRANZ.

KDC - Approved Building Consent Document - BC210608_SD_ISSUED - Pg 110 of 125 - 29/09/2021 - vsingh

Installation Information

Installation Skill Level Requirements

13.1 All design and building work must be carried out in accordance with the Watergate Plus Wall Underlay Technical Literature and this Appraisal by competent and experienced tradespersons conversant with wall underlays. Where the work involves Restricted Building Work (RBW) this must be completed by, or under the supervision of, a Licensed Building Practitioner (LBP) with the relevant Licence Class.

Underlay Installation

14.1 Watergate Plus must be fixed to all framing members at maximum 300 mm centres with clouts, staples, self drilling screws or proprietary underlay fixings. For steel framing double-sided tape may be used which is applied to each stud in continuous strips. The underlay must be pulled taut over the framing before fixing.

14.2 Watergate Plus must be run horizontally and must extend from the upper-side of the top plate to the under-side of the bearers or wall plates supporting ground floor joists, or below bottom plates on concrete slabs. Horizontal laps must be no less than 150 mm wide, with the direction of the lap ensuring that water is shed to the outer face of the membrane. End laps must be made over framing and be no less than 150 mm wide.

14.3 The wall underlay should be run over openings and these left covered until windows and doors are ready to be installed. Openings are formed in the underlay by cutting on a 45 degree diagonal from each corner of the penetration. The flaps of the cut underlay must be folded inside the opening and stapled to the penetration framing. Excess underlay may be cut off flush with the internal face of the wall frame.

14.4 Watergate Plus can be added as a second layer over head flashings in accordance with the requirements of NZBC Acceptable Solution E2/AS1, Paragraph 9.1.10.3 for timber framing or NASH Building Envelope Solutions Paragraph 9.1.11.3 for steel framing.

14.5 When fixing the product in windy conditions, care must be taken due to the large sail area created by wide roll widths.

14.6 Any damaged areas of Watergate Plus, such as tears, holes or gaps around service penetrations, must be repaired. Damaged areas can be repaired by covering with new material lapping the damaged area by at least 150 mm and taping, or by taping small tears.

Inspections

14.7 The Technical Literature must be referred to during the inspection of Watergate Plus installations.

Basis of Appraisal

The following is a summary of the technical investigations carried out:

Tests

15.1 The following tests have been carried out on Watergate Plus in accordance with NZBC Acceptable Solution E2/AS1, Table 23: tensile strength, edge-tear resistance and resistance to water vapour transmission in accordance with AS/NZS 4200.1, shrinkage in accordance with AS/NZS 4201.3, resistance to water penetration in accordance with AS/NZS 4201.4, surface water absorbency in accordance with AS/NZS 4201.6, pH of extract in accordance with AS/NZS 1301.421s and air resistance to BS 6538.3. A range of these tests were completed before and after Watergate Plus was exposed to UV light.

15.2 The flammability index of Watergate Plus has been evaluated in accordance with AS/NZS 1530.2.

Readers are advised to check the validity of this Appraisal by referring to the Valid Appraisals listing on the BRANZ website, or by contacting BRANZ.

KDC - Approved Building Consent Document - BC210608_SD_ISSUED - Pg 111 of 125 - 29/09/2021 - vsingh

Other Investigations

16.1 A durability opinion has been given by BRANZ technical experts.

16.2 An evaluation of the expected performance of Watergate Plus in direct contact with metal wall cladding has been completed by BRANZ.

16.3 The practicability of installation of Watergate Plus has been assessed by BRANZ and found to be satisfactory.

16.4 The Technical Literature, including installation instructions, has been examined by BRANZ and found to be satisfactory.

Quality

17.1 The manufacture of Watergate Plus has not been examined by BRANZ, but details of the methods adopted for quality control and the quality of the materials used, have been obtained and found to be satisfactory.

17.2 The quality of supply to the market is the responsibility of Thermakraft Limited.

17.3 Building designers are responsible for the design of the building, and for the incorporation of the wall underlay into their design in accordance with the instructions of Thermakraft Limited.

17.4 Quality of installation is the responsibility of the installer in accordance with the instructions of Thermakraft Limited.

Sources of Information

- AS 1530.2: 1993 Test for flammability of materials.
- AS/NZS 1301.421s: 1998 Determination of the pH value of aqueous extracts of paper, board and pulp - Cold extraction method.
- AS/NZS 4200.1: 1994 Pliable building membranes and underlays - Materials.
- AS/NZS 4201.1: 1994 Pliable building membranes and underlays - Methods of test – Resistance to dry delamination.
- AS/NZS 4201.2: 1994 Pliable building membranes and underlays - Methods of test – Resistance to wet delamination.
- AS/NZS 4201.3: 1994 Pliable building membranes and underlays - Methods of test – Shrinkage.
- AS/NZS 4201.4: 1994 Pliable building membranes and underlays - Methods of test – Resistance to water penetration.
- AS/NZS 4201.6: 1994 Pliable building membranes and underlays - Methods of test – Surface water absorbency.
- BS 6538.3: 1987 Method for determination of air permeance using the Garley apparatus.
- NZS 2295: 2006 Pliable, permeable building underlays
- NZS 3604: 2011 Timber-framed buildings.
- NASH Building Envelope Solutions: 2019 Light steel framed buildings.
- NASH Standard Part Two: 2019 Light Steel Framed Buildings
- Ministry of Business, Innovation and Employment Record of Amendments - Acceptable Solutions, Verification Methods and Handbooks.
- The Building Regulations 1992.

Readers are advised to check the validity of this Appraisal by referring to the Valid Appraisals listing on the BRANZ website, or by contacting BRANZ.

KDC - Approved Building Consent Document - BC210608_SD_ISSUED - Pg 112 of 125 - 29/09/2021 - vsingh

Amendments

Amendment No. 1, dated 30 November 2018

This Appraisal has been amended to change the Appraisal name to Watergate 295 Synthetic Underlay and to update Table 1.

Amendment No. 2, dated 15 February 2019

This Appraisal has been amended to change the Appraisal name to Watergate Plus Wall Underlay.

Amendment No. 3, dated 26 February 2020

This Appraisal has been amended to change the Appraisal name to Watergate Plus, include roll size of 3.0 m x 30 m, update Table 1 and update NZBC referenced documents.

Amendment No. 4, dated 01 March 2021

This Appraisal has been amended to update the roll sizes available. Refer Table 1.

Readers are advised to check the validity of this Appraisal by referring to the Valid Appraisals listing on the BRANZ website, or by contacting BRANZ.

KDC - Approved Building Consent Document - BC210608_SD_ISSUED - Pg 113 of 125 - 29/09/2021 - vsingh

In the opinion of BRANZ, Watergate Plus Wall Underlay is fit for purpose and will comply with the Building Code to the extent specified in this Appraisal provided it is used, designed, installed and maintained as set out in this Appraisal.

The Appraisal is issued only to Thermakraft Limited, and is valid until further notice, subject to the Conditions of Appraisal.

Conditions of Appraisal

1. This Appraisal:
   a) relates only to the product as described herein;
   b) must be read, considered and used in full together with the Technical Literature;
   c) does not address any Legislation, Regulations, Codes or Standards, not specifically named herein;
   d) is copyright of BRANZ.
2. Thermakraft Limited:
   a) continues to have the product reviewed by BRANZ;
   b) shall notify BRANZ of any changes in product specification or quality assurance measures prior to the product being marketed;
   c) abides by the BRANZ Appraisals Services Terms and Conditions;
   d) warrants that the product and the manufacturing process for the product are maintained at or above the standards, levels and quality assessed and found satisfactory by BRANZ pursuant to BRANZ's Appraisal of the product.
3. BRANZ makes no representation or warranty as to:
   a) the nature of individual examples of, batches of, or individual installations of the product, including methods and workmanship;
   b) the presence or absence of any patent or similar rights subsisting in the product or any other product;
   c) any guarantee or warranty offered by Thermakraft Limited.
4. Any reference in this Appraisal to any other publication shall be read as a reference to the version of the publication specified in this Appraisal.
5. BRANZ provides no certification, guarantee, indemnity or warranty, to Thermakraft Limited or any third party.

For BRANZ

Chelydra Percy
Chief Executive

Date of Issue:
21 September 2017

Readers are advised to check the validity of this Appraisal by referring to the Valid Appraisals listing on the BRANZ website, or by contacting BRANZ.

318442-Rev D
Oct 2018

KDC - Approved Building Consent Document - BC210608_SD_ISSUED - Pg 114 of 125 - 29/09/2021 - vsingh

INSTALLATION INSTRUCTIONS
&
OWNERS GUIDE

RHEEM LOW PRESSURE VITREOUS ENAMEL ELECTRIC HOT WATER HEATERS

Congratulationtions for choosing a Rheem Water Heater

It is important that you take a few minutes to read this booklet as it may save you time andtrouble later.
If you require any further information or your water heater needs to be serviced, please contact the Rheem Service Department on 0800 657 335, or visit www.rheem.co.nz

Important to the Installer

Do not leave this booklet inside the element cover after installation.
Please leave the booklet with the water heater's owner.

IMPORTANT INFORMATION

GENERAL

- The information contained in this manual, and all other information or advice given at any time by Rheem New Zealand Limited in connection with the purchase, installation or use of a Rheem water heater, is given in good faith. Subject to any rights the owner may have under the "Consumer Guarantees Act 1993", Rheem New Zealand Limited will not be liable to any person for any inaccuracy or omission in the information or advice arising through the fault or negligence of Rheem New Zealand Limited or any other person or through any other cause whatsoever.

- This water heater is to be installed to AS/NZS3500.4 or NZS4603 (if the water heater is to be installed as an open vented system) or NZS4607 (if the water heater is to be installed as a valve vented system) and the requirements of the appropriate local authority and G12 of the building code.

⚠ ***Warning:*** *This water heater is only intended to be operated by persons who have the experience or knowledge and capabilities to do so. This water heater is not intended to be operated by persons with reduced physical, sensory or mental capabilities i.e. the infirm, or by children. Children should be supervised to ensure they do not play with the appliance.*

ABOUT YOUR WATER HEATER

Q. DOES THE WATER QUALITY AFFECT THE WATER HEATER?

A. Your water heater is suitable for most public water supplies, however, some water qualities may have a detrimental effect on it. **If you are in a known harsh water area please refer to page 9**.

Q. HOW HOT SHOULD THE WATER BE?

A. For reasons of safety and economy, we recommend the thermostat is adjusted to the lowest setting that meets your needs. Some models require an authorised person to make any temperature adjustments. The New Zealand Building Code G12 requires a temperature setting of not less than 60°C within the tank to protect against Legionella.

Regulations require an approved temperature limiting device (tempering valve) be fitted into the hot water pipe work to the bathroom(s) and ensuite(s) to provide safety protection from potential scalding. This will keep the hot water supply temperature to the bathroom(s) and ensuite(s) below 55°C which will reduce the risk of scald injury whilst still allowing hotter water (60°C+) to the kitchen and laundry.

To minimise scalding, especially for those people in high scald risk categories i.e. young children, people with potentially incapacitating medical conditions, elderly people etc, this water heater must be installed in accordance with AS/NZS 3500.4.

⚠ ***Warning:*** *This water heater can deliver water at temperatures which can cause scalding. Always check the water temperature before use, such as when entering a shower or filling a bath or basin, to ensure it is suitable for the application and will not cause a scald injury.*

Q. HOW DO I KNOW IF THE WATER HEATER IS INSTALLED CORRECTLY?

A. Refer to the installation requirements on page 4.

Q. HOW LONG WILL THE WATER HEATER LAST?

A. There are a number of factors that affect the life of the water heater. These include; the water quality, water pressure, water temperature and the usage pattern, however, your Rheem water heater is supported by a comprehensive warranty (refer to page 11).

The life of the water heater may be extended by arranging for an authorised person to inspect the anode and replace it, if required.

The suggested time period after installation when the anode should be inspected is 8 years in town supply water areas.

KDC - Approved Building Consent Document - BC210608_SD_ISSUED - Pg 115 of 125 - 29/09/2021 - vsingh

In areas of softened water supplies or poor water quality bores, wells or dam supplied the anode should be inspected after 5 years. Failure to do so will shorten the water heaters life. (Refer to "Water Quality" on page 8).

HOW THE WATER HEATER WORKS

SINGLE ELEMENT MODELS

Water stored within the water heater is heated by the electric heating element. The thermostat controls the electricity supply to the heating element so that a constant water temperature is maintained. As the cold water is heated it expands approximately 1/50 of its volume and, as a result, a small amount of water is discharged from the cold water expansion valve or through the vent pipe onto the roof for open vented installations.

SAFETY

Fitted to the water heater is a thermostat, which incorporates an over-temperature thermal cut-out device.

⚠ ***Warning:*** *All installations must be fitted with a pressure relief valve.*

⚠ ***Warning:*** *The operation of the thermal cut-out indicates a possible dangerous situation. Do not reset the thermal cut-out until the water heater has been serviced by an authorised service person.*

⚠ ***Warning:*** *These safety devices must not be tampered with, or removed, and under no circumstances operate the water heater unless these devices are fitted.*

REGULAR CARE

GOING ON HOLIDAYS:

If you plan to be away from home for one or two nights, we suggest that you leave the water heater switched on. However, if you plan to stay away more than a few nights, conserve energy by switching the water heater off at the isolating switch, or at the main switchboard. In locations where freezing could occur, you should leave the water heater turned on.

SAVE A SERVICE CALL

CHECK THE ITEMS BELOW BEFORE MAKING A SERVICE CALL. YOU MAY BE CHARGED FOR SERVICE IF THE FAULT IS NOT RELATED TO THE WATER HEATER MANUFACTURE OR PARTS SUPPLIED WITH THE WATER HEATER BY RHEEM.

WATER DISCHARGING FROM VALVE DRAINS

It is normal for the cold water expansion valve and the relief valve to discharge a small quantity of water during the heating cycle. However, if either of these valves discharges continually or more than a bucket full of water in 24 hours it may indicate that a valve needs service or replacement. Contact a Rheem Service Centre.

NOT ENOUGH HOT WATER (or no hot water)

- **Is the electricity turned on?**
  Check the switch marked ‘water heater’ at the switchboard and the water heater isolating switch.
  Check the fuse marked ‘water heater’.

WHERE THE WATER HEATER IS CONNECTED TO AN OFF PEAK (NIGHT RATE) ELECTRICAL TARIFF, THE SUPPLY MAY NOT BE AVAILABLE AT CERTAIN TIMES OF THE DAY OR NIGHT.

- **Do you have the correct size water heater for your requirements?**
  Refer to the sizing guide in the Rheem sales literature or the Rheem website.
- **Is one outlet (especially the shower) using more hot water than you think?**
  Carefully review the family’s hot water usage and if necessary, check the shower flow rate.

KDC - Approved Building Consent Document - BC210608_SD_ISSUED - Pg 116 of 125 - 29/09/2021 - vsingh

For maximum efficiency we recommend the flow rate through the shower is between 8 to 10 litres per minute. This can be achieved by installing a flow control valve if provision is not made to fit a flow restrictor in the shower rose.

- **Ensure the thermostat setting is appropriate**
  Note some models require an authorised person to make thermostat adjustments.

KDC - Approved Building Consent Document - BC210608_SD_ISSUED - Pg 117 of 125 - 29/09/2021 - vsingh

HIGH ELECTRICITY BILLS

- **Is one outlet (especially the shower) using more hot water than you think?** (see above).
- **Is there a leaking hot water pipe, dripping hot water tap, etc?**
  Even a small leak will waste a surprisingly large quantity of hot water and energy. Service dripping taps, and have your plumber rectify any leaking pipe-work.
- **Is the cold water expansion valve discharging too much water?**
- **Consider recent changes to your hot water usage pattern and check if there has been an increase in tariffs since your previous account.**

INSTALLATION

Please take careful notice of the advice given as Rheem New Zealand Limited will not be liable for any loss or damage suffered as a result of the incorrect installation of the water heater, or any failure to check the capability of the electrical supply and wiring to the water heater.

The water heater must be installed and serviced by a certified person or registered plumber and the installation must comply with the New Zealand Building Code G12, Rheem Installation Instructions, AS/NZS 3000 Electrical Installations and all local codes and regulatory authority requirements. Please note also that no warranty costs will be payable where the water heater is located in a position that does not comply with the Rheem water heater installation instructions or relevant statutory requirements, causing the need for major dismantling or removal of cupboards, doors or walls, or use of special equipment to bring the water heater to floor or ground level or to a serviceable position.

- **WATER HEATER LOCATION**

Rheem electric water heaters with a galvanised outer casing are only suitable for indoor installations, whereas water heaters with a factory painted casing are suitable for both indoor and outdoor installations. Outdoor models must be installed on a hard, level base and feet must be used between the bottom of the water heater and the base.

Clearance must be allowed for servicing and removal of the water heater and it must be accessible without the use of a ladder or scaffold. Adequate clearance must be provided for: cold water expansion valve removal, element cover and element removal, and anode removal and replacement. Also, the information on the rating label must remain readable once installed.

- **WATER SUPPLY PRESSURE**
  Maximum inlet water pressure: 120kPa.

- **CONNECTION SIZES**
  Hot and Cold water connection: RP ¾ / 20.

- **INLET/OUTLET CONNECTIONS**
  Unions must always be provided at the cold water inlet, hot water outlet and at any additional connections to allow for removal of the water heater should it be required. All connection sockets on the water heater are parallel threaded and therefore tapered brass nipples must be used to ensure watertight connections. Parallel brass nipples must not be used and could invalidate warranty. Both connections are fitted with plastic liners and it is important that they remain in situ for the water heater to function properly. These liners will be pushed into the correct position as the fitting is being screwed in.

- **NON RETURN VALVE**
  A non-return valve must be installed on the cold water line to the water heater.

- **PIPE SIZES**
  The cold water line to the water heater should be the same size or bigger than the hot water line from the water heater. For best results, choose the most suitable pipe size for each individual application.

- **COLD WATER EXPANSION VALVE**
  A cold water expansion valve must be fitted to the cold water line to the water heater including open vented systems in frost prone areas.

- **RELIEF VALVE**
  For closed (valve vented) installations a pressure relief valve must be fitted. The valve drain pipe must be the same size or larger than the valve outlet. The drain must run downwards to a visible point outside the house, preferably over a gully trap. In locations where the pipe exceeds 3 metres unbroken length or freezing could occur, an air break must be provided within 300mm of the relief valve.

- **SPACE REQUIREMENTS**
  See product labelling for specific dimensions of space for installation.

- **PRESSURE REDUCING VALVE**
  If the water supply pressure exceeds the rated pressure, a pressure reducing valve is to be fitted in the installation.

- **SAFE TRAY AND SEISMIC RESTRAINT**
  The water heater must be installed with a properly drained safe tray where there is the possibility of water damage to furniture, carpets or building. All water heaters must be restrained to protect against seismic forces. (Refer to the New Zealand Building Code for Acceptable Solutions.)

KDC - Approved Building Consent Document - BC210608_SD_ISSUED - Pg 118 of 125 - 29/09/2021 - vsingh

KDC - Approved Building Consent Document - BC210608_SD_ISSUED - Pg 119 of 125 - 29/09/2021 - vsingh

DIAGRAM 1 – TYPICAL VALVE VENTED INSTALLATION

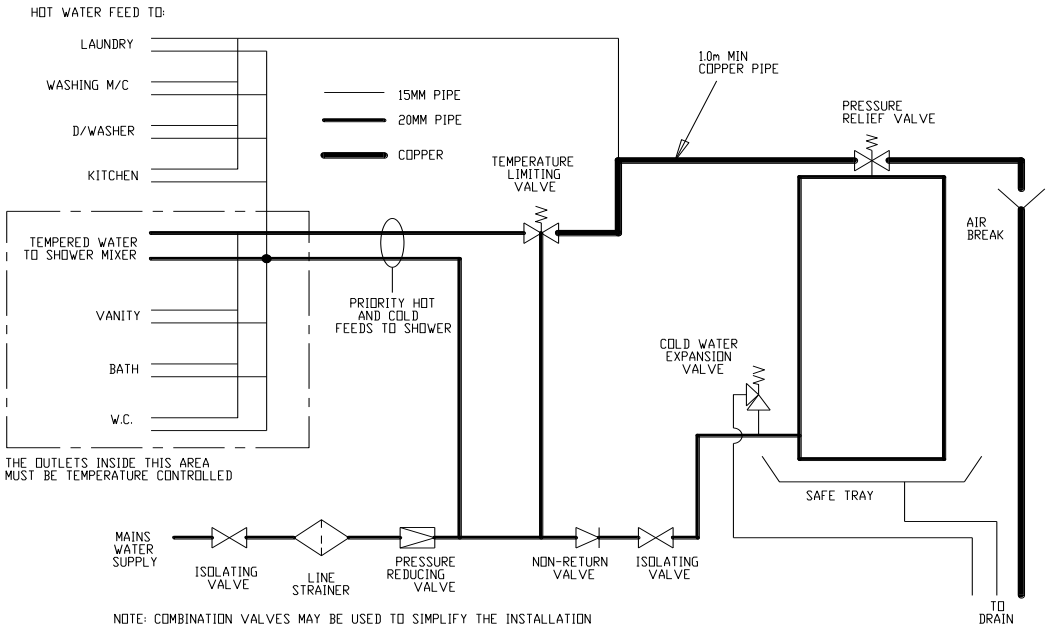

DIAGRAM 2 – TYPICAL OPEN VENTED INSTALLATION

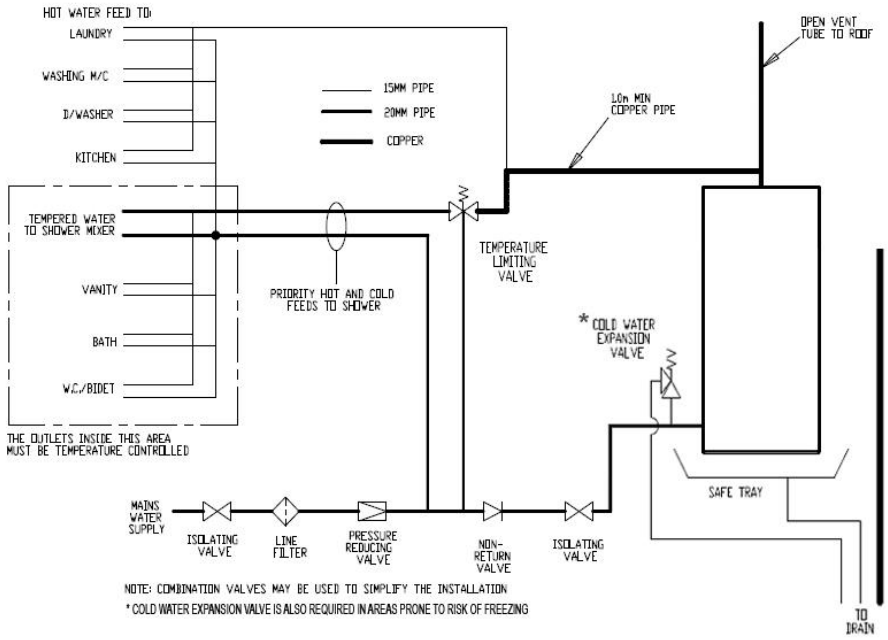

⚠ ***Warning: For closed (valve vented) installations*** *a pressure relief valve must be fitted in the installation. Relief valve rating 7 kW minimum. Refer main label for pressure rating. The valve or drain valve outlet pipe must not be sealed or blocked. The first metre of drain line from the relief valve must be in copper.*

⚠ ***Warning: For open vented installations*** *the vent pipe must not be sealed or blocked.*

⚠ ***Warning: For Push Through (Open Outlet) installations*** *the outlet acts as a vent and must only be connected to a fitting recommended by the manufacturer. It must not be connected to a tap.*

On the drawing above page 6 in frost prone areas a cold water expansion valve must be installed as per New Zealand Building Code G12.

CONNECTIONS - ELECTRICAL

The electrical installation must be completed in accordance with AS/NZS3000. All water heaters are designed for 230VAC, 50 Hz mains operation and a means of disconnection from the power supply must be incorporated in the fixed wiring during installation. A flexible 20mm conduit is required for the electrical cable to the water heater. The conduit is to be connected to the unit with a 20 mm plain to screw adaptor. Connect the power supply wires directly to the terminal block and earth tab connection, ensuring there are no excess wire loops inside the front cover. For details, refer to the wiring diagram on the inside of the element cover. **A separate heating element earth wire is not required because the element earths by the thread of the element boss or flange being in contact with the element socket.**

COMMISSIONING

TO FILL AND TURN ON THE WATER HEATER

⚠ ***Warning: The power supply to the water heater must not be switched on until the water heater is filled with water and an "Earth Continuity Test", as outlined in Annex A of AS/NZS60335.1, has been carried out. Failure to do so will damage the element and shorten its life and may create a dangerous situation.***

- Open all the hot water taps in the house (don't forget the shower). Open the cold water isolation valve fully to the water heater to force the air out of the taps. As water flows freely from each tap, close it. Check the pipe-work for leaks.
- Switch on the electrical supply at the isolating switch to the water heater.

TO TURN OFF THE WATER HEATER

If it is necessary to turn off the water heater on completion of the installation, such as on a building site or where the premises is vacant, then;

- Switch off the electrical supply at the isolating switch to the water heater.
- Close the cold water isolation valve at the inlet to the water heater.

DRAINING THE WATER HEATER

- Switch off the electrical supply at the isolation switch to the water heater.
- Close the cold water isolation valve.
- Open all hot water taps and then for closed (valve vented) installations open the union at the top outlet to allow air into the water heater and water to flow out.
- Open the water heater drain valve or remove the drain plug.

KDC - Approved Building Consent Document - BC210608_SD_ISSUED - Pg 120 of 125 - 29/09/2021 - vsingh

WHAT YOU SHOULD KNOW ABOUT WATER QUALITY

Your Rheem water heater is manufactured to suit the water condition of most local authority water supplies. However, some water supplies can have a detrimental effect on the water heater and its operation and/or life expectancy. If you are unsure of your water quality, you can obtain information from your local water supply authority.

KDC - Approved Building Consent Document - BC210608_SD_ISSUED - Pg 121 of 125 - 29/09/2021 - vsingh

HARSH WATER AREAS

Rheem water heaters are designed for use in areas where the Total Dissolved Solids (TDS) content of the water supply is less than 2500mg/L.

In areas where the TDS exceeds 600mg/L it is possible the standard magnesium anode fitted to the water heater may be excessively active. To alleviate this, the magnesium anode should be replaced with an aluminium anode. Where the TDS of the water is less than 40mg/L, such as when the water has been deionised or is from an alpine supply, a high potential anode should be used. The changing of anodes must be carried out by a plumber or qualified service person. Refer to the table below;

ANODE TYPES

Anode Colour Code	Material	Total Dissolved Solids (TDS content)
Green	Magnesium	0-40 mg/L
Black (standard)	Magnesium/Zinc	41-600 mg/L
Blue	Aluminium	601-2500 mg/L

CAUTION

If your water supply has a TDS greater than 600mg/L and the anode has not been changed, there is a possibility of hydrogen gas accumulating in the top of the water heater during long periods of no use.

If, under these conditions, the water heater has not been used for two or more weeks the following procedure should be carried out before using any electrical appliances (e.g. automatic washing machines and dishwashers) which are connected to the hot water supply.

The hydrogen, which is highly flammable, should be vented safely by opening a hot tap and allowing the water to flow. There should be no smoking or naked flames near the tap whilst it is turned on. Any hydrogen gas will be dissipated as indicated by an unusual spurting of the water from the tap. Once the water runs freely again any hydrogen in the system will have been released.

SATURATION INDEX

The saturation index is used as a measure of the water's corrosive or scaling properties. In a scaling water supply calcium carbonate is deposited out of the water onto any hot metallic surface. When scaling water has a saturation index greater than +0.40 an expansion control valve must be fitted on the cold water line after the non-return valve.

Where the saturation index exceeds +0.80, low watts density elements should be used. Where the saturation index is less than -1.0, a corrosive resistant heating unit should be used (contact your local Rheem Service Department or an authorised service person).

WATER HEATERS NOT INSTALLED IN ACCORDANCE WITH THE ABOVE ADVICE WILL NOT BE COVERED BY THE RHEEM WARRANTY.

NOTES

KDC - Approved Building Consent Document - BC210608_SD_ISSUED - Pg 122 of 125 - 29/09/2021 - vsingh

WARRANTY

LOW PRESSURE VITREOUS ENAMEL ELECTRIC WATER HEATER PRODUCT WARRANTY --- NEW ZEALAND ONLY --

In addition to your legal rights, in New Zealand, Rheem New Zealand Limited makes the following promise to the owner. We will repair or, if necessary, replace a defective water heater or part of it, which has failed due to faulty manufacture on the following terms and conditions:

1. THE RHEEM WARRANTY – GENERAL

1.1 This warranty is given in respect of sales in New Zealand by Rheem New Zealand Limited, Company number 1175771, 475 Rosebank Road, Avondale, Auckland.

1.2 Rheem offer a trained and qualified national service network that will repair or replace components at the address where the water heater is installed subject to the terms of the Rheem warranty. In New Zealand contact your Rheem Service Centre on 0800 657 335.

1.3 For details about this warranty, you can contact us in New Zealand at rheem@rheem.co.nz or phone your Rheem Service Centre on 0800 657 335.

1.4 The terms of this warranty are set out in Section 2 and apply to water heaters manufactured after 1st October 2018.

1.5 If a subsequent version of this warranty is published, the terms of that warranty will apply to water heaters manufactured after the date specified in the subsequent version.

2. TERMS OF THE RHEEM WARRANTY AND EXCLUSIONS TO IT

2.1 The decision of whether to repair or replace a faulty component is at Rheem New Zealand's sole discretion.

2.2 Where a failed component or cylinder is replaced under this warranty, the balance of the original warranty period will remain effective. The replacement does not carry a new Rheem New Zealand Limited warranty.

2.3 Where the water heater is installed outside the boundaries of a metropolitan area as defined by Rheem New Zealand Limited or further than 25km from a Rheem New Zealand Limited Service Centre's office, the cost of transport, insurance and travelling between the Rheem New Zealand Limited Service Centre's office and the installed site shall be the owner's responsibility.

2.4 Where the water heater is installed in a position that does not allow safe or ready access, the cost of that access, including the cost of additional materials handling and/or safety equipment, shall be the owner's responsibility. In other words, the cost of dismantling or removing cupboards, doors or walls and the cost of any special equipment to bring the water heater to floor or ground level, or to a serviceable position is not covered by this warranty.

2.5 This warranty only applies to the original and genuine Rheem New Zealand Limited's water heater in its original installed location and any genuine Rheem replacement parts.

2.6 The Rheem New Zealand Limited warranty does not cover faults that are a result of:

a) Accidental damage to the water heater or any component (for example:
   (i) Acts of God such as floods, storms, fires, lightning strikes and the like; and
   (ii) Third party acts or omissions).

b) Misuse or abnormal use of the water heater.

c) Installation or use not in accordance with the Owner's Guide and Installation Instructions or with relevant statutory and local requirements (including failure to install a properly drained safe tray where required by the Owner's Guide and Installation Instructions).

d) Connection at any time to a water supply that does not comply with the water supply guidelines as outlined in the Owner's Guide and Installation Instructions, or poor water quality outside the limits specified in the Owner's Guide and Installation Instructions.

e) Service or repair work, attempts to repair or modifications to the water heater by a person other than Rheem Service or a Rheem Service Centre.

f) Faulty plumbing or faulty power supply.

g) Failure to maintain the water heater in accordance with the Owner's Guide and Installation Instructions.

h) Transport damage.

i) Fair wear and tear from adverse conditions (for example, corrosion).

j) Cosmetic defects.

KDC - Approved Building Consent Document - BC210608_SD_ISSUED - Pg 123 of 125 - 29/09/2021 - vsingh

KDC - Approved Building Consent Document - BC210608_SD_ISSUED - Pg 124 of 125 - 29/09/2021 - vsingh

2.7 If you require a call out and we find that the fault is not covered by the Rheem warranty, you are responsible for the Rheem Service Centre's call out cost. If you wish to have the relevant component repaired or replaced by Rheem that service will be at your cost.

2.8 Subject to any statutory provisions to the contrary, this warranty excludes any and all claims however arising, including under contract or tort, for damage to furniture, carpet, walls, foundations or any other consequential loss or incidental expenses either directly or indirectly due to leakage from the Rheem water heater, or due to leakage from fittings and/ or pipe work of metal, plastic or other materials caused by water temperature, workmanship or other modes of failure that were not reasonably foreseeable as liable to result from the failure.

2.9 This warranty excludes to the extent permissible all implied warranties set out in the Sale of Goods Act 1908 (New Zealand) and all guarantees set out in the Consumer Guarantees Act 1993 (New Zealand) to the extent that the goods are acquired for the purpose of resupply in trade, consumption in the course of a process of production or manufacture or repairing or treating in trade other goods or fixtures on land.

3. WHAT IS COVERED BY THE RHEEM WARRANTY FOR THE WATER HEATERS DETAILED IN THIS DOCUMENT

3.1 Rheem will repair or replace a faulty component of your unit if it fails to operate in accordance with its specifications as follows:

Warranty Cover	**The period from date of installation, in which the fault must appear, in order to be covered**		*Domestic use is defined as; when the appliance is installed in a single family domestic dwelling.
What components are covered	**Domestic use***	**Non-domestic use***	**What coverage you receive**
Low Pressure	**Years**		**(Excludes Optima)
All components	1	1	Repair or replacement of failed component, or if necessary, replacement of the complete water heater, free of charge, including labour.
Cylinder only (Thermostat setting must be below 70°C)	5	1	Repair or replacement of the complete water heater, free of charge, including labour.
Cylinder only (Thermostat setting must be below 70°C)	10	3	Repair or replacement of the complete water heater, free of charge. Installation and labour cost are the responsibility of the owner.

4. ENTITLEMENT TO MAKE A CLAIM UNDER THIS WARRANTY

4.1 To be entitled to make a claim under this warranty you need to:

a) Be the owner of the water heater or have consent of the owner to act on their behalf.

b) Contact Rheem Service without undue delay after detection of the defect and, in any event, within the applicable Rheem warranty period.

4.2 You are **not** entitled to make a claim under this Rheem warranty if your water heater:

a) Does not have its original serial numbers or rating labels.

b) Is not installed in New Zealand.

5. HOW TO MAKE A CLAIM UNDER THIS WARRANTY

5.1 If you wish to make a claim under this warranty, you need to:

a) Contact Rheem on 0800 657 335 and provide owner's details, address of the water heater, a contact number and date of installation of the water heater or if that's unavailable, the date of manufacture and serial number (from the rating label on the water heater).

b) Rheem will arrange for the water heater to be assessed on-site and may require the unit to be removed and returned to the factory for further testing.

c) If Rheem determines that you have a valid warranty claim, Rheem will repair or replace the water heater in accordance with this warranty.

5.2 Any expenses incurred in the making of a claim under this warranty will be borne by you.

KDC - Approved Building Consent Document - BC210608_SD_ISSUED - Pg 125 of 125 - 29/09/2021 - vsingh

6. THE CONSUMER GUARANTEES ACT 1993 (NEW ZEALAND)

6.1 Our goods come with guarantees that cannot be excluded under the Consumer Guarantees Act 1993 (New Zealand). If the goods fail to comply with the applicable guarantees set out under the Consumer Guarantees Act 1993 (New Zealand) being the guarantee as to acceptable quality, the guarantee as to correspondence with description or the guarantee as to repair and parts, or if the goods fail to comply with any express guarantee given by Rheem, then you are entitled to a replacement or refund and for compensation for any other reasonably foreseeable loss or damage.

6.2 The Rheem warranty (set out above) is in addition to any rights and remedies that you may have under the Consumer Guarantees Act 1993 (New Zealand)

RHEEM NEW ZEALAND LTD	FOR SERVICE TELEPHONE **0800 657 335 NEW ZEALAND**
www.rheem.co.nz	475 Rosebank Road, Avondale, Auckland

Note: Every care has been taken to ensure accuracy in preparation of this publication. No liability can be accepted for any consequences, which may arise as a result of its application.

KDC - Approved Building Consent Document - BC21-608_SP_ISSUED - Pg 1 of 177 - 29/09/2021 - vsingh

Approved Building Consent Documents

Please note: A copy of the stamped, approved documents must be available onsite for **all** inspections.

KDC - Approved Building Consent Document - BC21-608_SP_ISSUED - Pg 2 of 177 - 29/09/2021 - vsingh

RECORD OF TITLE
UNDER LAND TRANSFER ACT 2017
FREEHOLD

Search Copy

R.W. Muir
Registrar-General
of Land

Identifier	**988296**
Land Registration District	**North Auckland**
Date Issued	23 April 2021

Prior References
NA42B/368

Estate	Fee Simple
Area	3911 square metres more or less
Legal Description	Lot 3 Deposited Plan 560279

Registered Owners
Gina Maree Utting and Dawn Owens

Interests

Subject to Section 59 Land Act 1948
12086992.2 Consent Notice pursuant to Section 221 Resource Management Act 1991 - 23.4.2021 at 11:29 am
12126265.3 Mortgage to ANZ Bank New Zealand Limited - 2.6.2021 at 3:49 pm

Diag. A

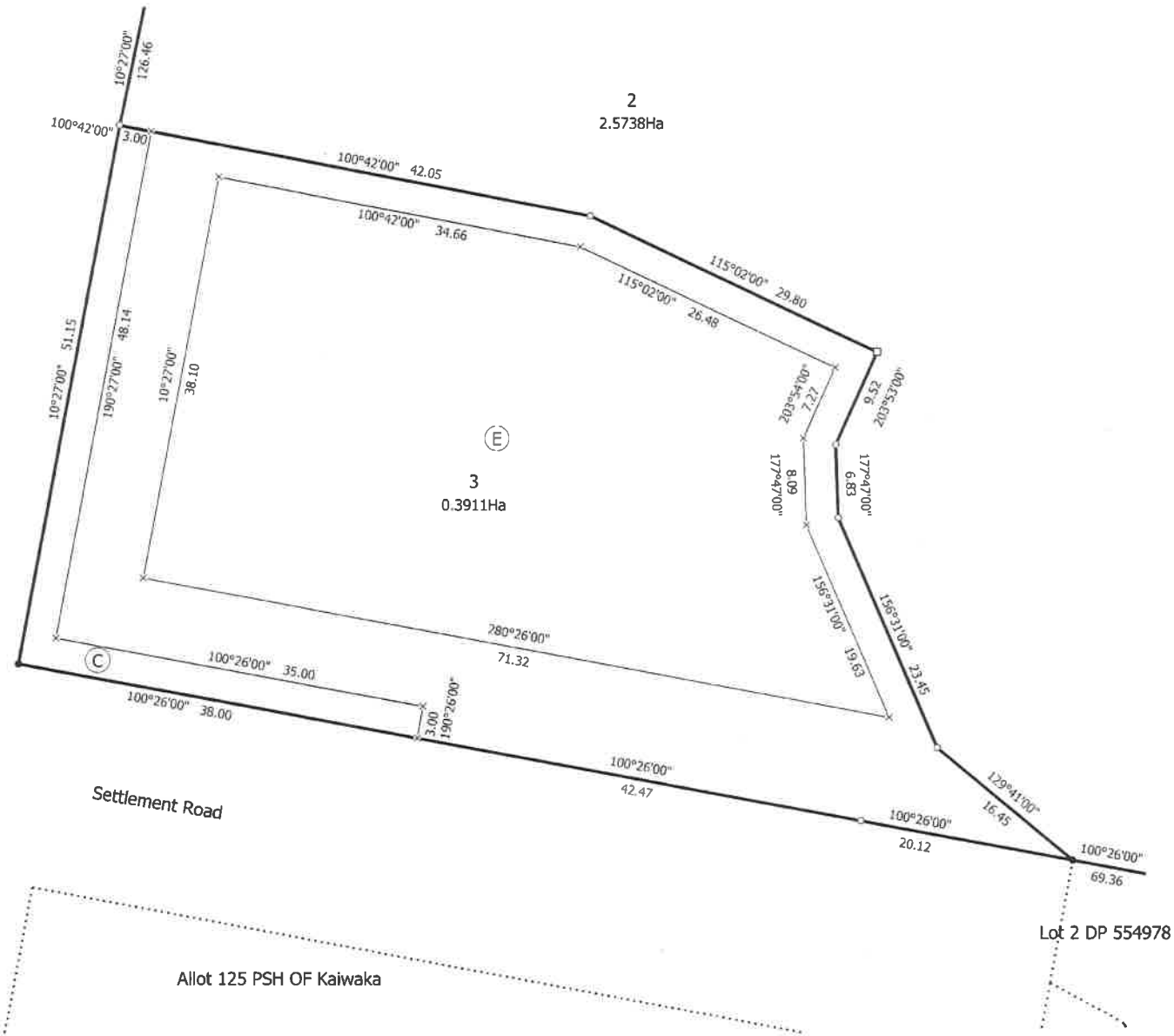

T 2/6

Land District: North Auckland Digitally Generated Plan Generated on: 17/05/2021 10:29am Page 4 of 8	Lots 1 - 3 Being a Subdivision of Allotment 310 Parish of Kaiwaka	Surveyor: Adam Paul Stanley Booth Firm: Pacific Coast Surveys Limited (Mang	Title Plan LT 560279 Approved on: 17/05/2021

View Instrument Details

Instrument No.	12086992.2
Status	Registered
Date & Time Lodged	23 Apr 2021 11:29
Lodged By	Fallon, Bridget Amanda
Instrument Type	Consent Notice under s221(4)(a) Resource Management Act 1991

Affected Records of Title	Land District
988294	North Auckland
988296	North Auckland

Annexure Schedule Contains 2 Pages.

Signature

Signed by John Muru Walters as Territorial Authority Representative on 16/04/2021 10:52 AM

***** End of Report *****

KDC - Approved Building Consent Document - BC21-608_SP_ISSUED - Pg 4 of 177 - 29/09/2021 - vsingh

KDC - Approved Building Consent Document - BC21-608_SP_ISSUED - Pg 5 of 177 - 29/09/2021 - vsingh

IN THE MATTER of the Resource Management Act 1991 ("**Act**")

A N D

IN THE MATTER of the subdivision of land shown in Deposited Plan 560279 (North Auckland Land Registration District) ("**Plan**")

CONSENT NOTICE
(Section 221 of the Act)

KAIPARA DISTRICT COUNCIL ("**Council**") being the territorial authority of the district within which the land described in the First Schedule below ("**Land**") is located has consented to the subdivision of the Land as shown in the Plan, subject to the conditions of the Second Schedule below to be complied with on a continuing basis by the Owner (as defined in the Act).

FIRST SCHEDULE
(Land)

ALL of the land contained in Record of Title NA42B/368

SECOND SCHEDULE
(Conditions)

The Owner (as defined in the Act) must, on a continuing basis, to the satisfaction of the Council, comply with the following conditions of the Council's Subdivision Consent RM200139 namely:

1. In respect of Lots 1 and 3 on the Plan (each a "Lot").

   (i) Earthworks, the location of buildings, building foundations and stormwater and wastewater disposal shall be subject to specific engineering design by a suitably qualified Chartered Professional Engineer having regard to any soil instability/saturation issues that may exist or arise as a result of the development. Design shall take into account the recommendations identified in the reports titled "Geotechnical Investigation Report", reference 20034, dated 18/05/2020, prepared by Wiley Geotechnical and "Flood Assessment", reference 97465, revision 1, dated 26/06/2020, prepared by Wilton Joubert, and submitted to Council with subdivision consent RM200139.

KDC - Approved Building Consent Document - BC21-608_SP_ISSUED - Pg 6 of 177 - 29/09/2021 - vsingh

(ii) The lots have been identified as being susceptible to inundation in a 100-year Annual Average Recurrence Interval (ARI) flood event. To provide for a 500mm freeboard for habitable buildings and 300mm freeboard for non-habitable, commercial and industrial buildings above the 100-year ARI flood level, taking into account the effects of climate change, the following finished floor levels are required for any new dwelling within the lots:
- Lot 1 and 3 – 35.00 for all buildings using One Tree Point (OTP) Datum.

(iii) A site specific onsite effluent treatment and disposal system shall be designed and submitted to Council for approval prior to lodgement of building consent which shall refer to the soil issues and other observations and recommendations made in the Geotechnical Report.

(iv) Sufficient firefighting water supply shall be provided for any single residential dwelling on the lot with a minimum volume of 10,000 litres and shall remain accessible and available all year round.

(v) Unless specifically authorised in writing by Fire and Emergency New Zealand, sufficient firefighting water supply shall be provided for any commercial or industrial land use. Sufficient firefighting water supply is deemed to mean meeting full criteria of the Code of Practice for firefighting water supplies (SNZ PAS 4509:2008 New Zealand Fire Service Firefighting Water Supplies Code of Practice).

(vi) All buildings must be located wholly within the designated building areas shown on the survey plan. For Lot 1 this is shown as area D. For Lot 2 this is shown as area E.

(vii) Landscape planting undertaken in area B on Lot 1 and area C on Lot 3 in accordance with the approved Landscape Management Plan prepared by Evolve Planning and Landscape Architecture, dated November 2020 shall be the responsibility of the lot owner and shall be managed in accordance with the Landscape Management Plan and protected in perpetuity.
Diseased, dying or dangerous plants must be removed and replaced in accordance with the approved Landscape Management Plan.

DATED the 15th day of April 2021

SIGNED by)
KAIPARA DISTRICT COUNCIL)
by its authorised signatory)

Dina Fetzner

KDC - Approved Building Consent Document - BC21-608_SP_ISSUED - Pg 7 of 177 - 29/09/2021 - vsingh

Gina Utting & Dawn Owens

Re: 752 Settlement Road, Hakaru, Auckland

11.8.21

Regarding Proposed Garage/Sleepout
760 Settlement Road, Hakaru, Auckland.

To Whom It May Concern.

Russell Swain, as my agent and designer, has my permission to act on my behalf regarding lodging the building consent application, responding to any council RFI's during processing and any minor variations during construction.

Kind Regards

Gina Utting – Trustee

Dawn Owens - Trustee

Email: ginautting@gmail.com

KDC - Approved Building Consent Document - BC21-608_SP_ISSUED - Pg 8 of 177 - 29/09/2021 - vsingh

Memorandum from licensed building practitioner: Certificate of design work

Section 45 and section 30C, Building Act 2004

Please fill in the form as fully and correctly as possible.

If there is insufficient room on the form for requested details, please continue on another sheet and attach the additional sheet(s) to this form.

THE BUILDING	
Street address: 752 Settlement Rd	
Suburb: Hakaru	
Town/City: Kaiwaka	Postcode: 0975

THE OWNER(S)	
Name(s): Gina Utting	
Mailing address: 752 Settlement Rd	
Suburb: akaru	PO Box/Private Bag:
Town/City: Kaiwaka	Postcode: 0975
Phone number:	Email address: ginautting@gmail.com

KDC - Approved Building Consent Document - BC21-608_SP_ISSUED - Pg 9 of 177 - 29/09/2021 - vsingh

BASIS FOR PROVIDING THIS MEMORANDUM

I am providing this memorandum in my role as the: Please tick the option that applies ✓

○	**sole** designer of all of the RBW design outlined in this memorandum – I carried out all of the RBW design work myself – no other person will be providing any additional memoranda for the project
○	**lead** designer who carried out some of the RBW design myself but also supervised other designers – this memorandum covers their RBW design work as well as mine, and **no other** person will be providing any additional memoranda for the project
✓	**lead** designer for all but specific elements of RBW – this memorandum only covers the RBW design work that I carried out or supervised and the **other** designers will provide their own memorandum relating to their specific RBW design
○	**specialist** designer who carried out specific elements of RBW design work as outlined in this memorandum – other designers will be providing a memorandum covering the remaining RBW design work

IDENTIFICATION OF DESIGN WORK THAT IS RESTRICTED BUILDING WORK (RBW)

I Russell Swain carried out / supervised the following design work that is restricted building work

PRIMARY STRUCTURE: B1

Design work that is RBW	Description of RBW	Carried out or supervised	Reference to plans and specifications
Tick ✓ if included. Cross ✗ if excluded	If appropriate, provide details of the RBW	Tick ✓ whether you carried out this design work or supervised someone else carrying out this design work	If appropriate, specify references
All RBW design work relating to B1 ✗		○ Carried out ○ Supervised	
Foundations and subfloor framing ✗		○ Carried out ○ Supervised	

KDC - Approved Building Consent Document - BC21-608_SP_ISSUED - Pg 10 of 177 - 29/09/2021 - vsingh

Design work that is RBW	Description of RBW	Carried out or supervised	Reference to plans and specifications
Tick ✓ if included. Cross ✗ if excluded	If appropriate, provide details of the RBW	Tick ✓ whether you carried out this design work or supervised someone else carrying out this design work	If appropriate, specify references
Walls ✓		◉ Carried out ○ Supervised	
Roof ✗		○ Carried out ○ Supervised	
Columns and beams ✓		◉ Carried out ○ Supervised	
Bracing ✓		◉ Carried out ○ Supervised	
Other ○		○ Carried out ○ Supervised	

KDC - Approved Building Consent Document - BC21-608_SP_ISSUED - Pg 11 of 177 - 29/09/2021 - vsingh

Design work that is RBW	Description of RBW	Carried out or supervised	Reference to plans and specifications
Tick ✓ if included. Cross ✗ if excluded	If appropriate, provide details of the RBW	Tick ✓ whether you carried out this design work or supervised someone else carrying out this design work	If appropriate, specify references
EXTERNAL MOISTURE MANAGEMENT SYSTEMS: E2			
All RBW design work relating to E2 ✓		◉ Carried out ○ Supervised	
Damp proofing ✗		○ Carried out ○ Supervised	
Roof cladding or roof cladding system ✓		◉ Carried out ○ Supervised	
Ventilation system (for example, subfloor or cavity) ✓	Cavity	◉ Carried out ○ Supervised	
Wall cladding or wall cladding system ✓		◉ Carried out ○ Supervised	
Waterproofing ✓		◉ Carried out ○ Supervised	
Other ○		○ Carried out ○ Supervised	

KDC - Approved Building Consent Document - BC21-608_SP_ISSUED - Pg 12 of 177 - 29/09/2021 - vsingh

Design work that is RBW	Description of RBW	Carried out or supervised	Reference to plans and specifications
Tick ✓ if included. Cross ✗ if excluded	If appropriate, provide details of the RBW	Tick ✓ whether you carried out this design work or supervised someone else carrying out this design work	If appropriate, specify references
FIRE SAFETY SYSTEMS: C1 - C6			
Emergency warning systems Evacuation and fire service operation systems ✓ Suppression or control systems Other	smoke alarm	◉ Carried out ○ Supervised	

Note: The design of fire safety systems is only restricted building work when it involves small-to-medium apartment buildings as defined by the Building (Definition of Restricted Building Work) Order 2011.

WAIVERS AND MODIFICATIONS

Waivers or modifications of the Building Code are required. ○ Yes ◉ No

If Yes, provide details of the waivers or modifications below:

Clause	Waiver/modification required
List relevant clause numbers of building code	Specify nature of waiver or modification of building code required

KDC - Approved Building Consent Document - BC21-608_SP_ISSUED - Pg 13 of 177 - 29/09/2021 - vsingh

ISSUED BY

Name and contact details of the licensed building practitioner who is licensed to carry out or supervise design work that is restricted building work.

Name: Russell Swain	LBP or Registration number: BP113899
The practitioner is a: (●) Design LBP ( ) Registered architect ( ) Chartered professional engineer	
Design Entity or Company (optional):	
Mailing address (if different from below):	
Street address/Registered office: 62a Waimarie St St Heliers	
Suburb:	Town/City: Auckland
PO Box/Private Bag:	Postcode: 1070
Phone number:	Mobile: 0212519309
After hours:	Fax:
Email address: russellswain@habitatdesign.co.nz	Website:

DECLARATION

I Russell Swain LBP, state that I have applied the skill and care reasonably required of a competent design professional in carrying out or supervising the Restricted Building Work (RBW) described in this form, and that based on this, I also state that the RBW:

- Complies with the building code, or
- Complies with the building code subject to any waiver or modification of the building code recorded on this form

Signature: RSwain

Date: 1.9.21

KDC - Approved Building Consent Document - BC21-608_SP_ISSUED - Pg 14 of 177 - 29/09/2021 - vsingh

Memorandum from licensed building practitioner: Certificate of design work

Section 45 and section 30C, Building Act 2004

Please fill in the form as fully and correctly as possible.

If there is insufficient room on the form for requested details, please continue on another sheet and attach the additional sheet(s) to this form.

THE BUILDING

Street address:	752 Settlement Road		
Suburb:	Hakaru		
Town/City:	Hakaru	Postcode:	0975

THE OWNER(S)

Name(s):	Gina Utting		
Mailing address:	752 Settlement Road		
Suburb:	Hakaru	PO Box/Private Bag:	
Town/City:	Hakaru	Postcode:	0975
Phone number:	0212670724	Email address:	ginautting@gmail.com

KDC - Approved Building Consent Document - BC21-608_SP_ISSUED - Pg 15 of 177 - 29/09/2021 - vsingh

BASIS FOR PROVIDING THIS MEMORANDUM

I am providing this memorandum in my role as the: Please tick the option that applies ✓

○	**sole** designer of all of the RBW design outlined in this memorandum – I carried out all of the RBW design work myself – no other person will be providing any additional memoranda for the project
○	**lead** designer who carried out some of the RBW design myself but also supervised other designers – this memorandum covers their RBW design work as well as mine, and **no other** person will be providing any additional memoranda for the project
○	**lead** designer for all but specific elements of RBW – this memorandum only covers the RBW design work that I carried out or supervised and the **other** designers will provide their own memorandum relating to their specific RBW design
✓	**specialist** designer who carried out specific elements of RBW design work as outlined in this memorandum – other designers will be providing a memorandum covering the remaining RBW design work

IDENTIFICATION OF DESIGN WORK THAT IS RESTRICTED BUILDING WORK (RBW)

I Stewart Hobbs carried out / supervised the following design work that is restricted building work

PRIMARY STRUCTURE: B1

Design work that is RBW	Description of RBW	Carried out or supervised	Reference to plans and specifications
Tick ✓ if included. Cross ✗ if excluded	If appropriate, provide details of the RBW	Tick ✓ whether you carried out this design work or supervised someone else carrying out this design work	If appropriate, specify references
All RBW design work relating to B1 ○		○ Carried out ○ Supervised	
Foundations and subfloor framing ✓	Rib raft foundations	○ Carried out ✓ Supervised	Sheet 5

KDC - Approved Building Consent Document - BC21-608_SP_ISSUED - Pg 16 of 177 - 29/09/2021 - vsingh

Design work that is RBW	Description of RBW	Carried out or supervised	Reference to plans and specifications
Tick ✓ if included. Cross ✗ if excluded	If appropriate, provide details of the RBW	Tick ✓ whether you carried out this design work or supervised someone else carrying out this design work	If appropriate, specify references
Walls ◯		◯ Carried out ◯ Supervised	
Roof ◯		◯ Carried out ◯ Supervised	
Columns and beams ◯		◯ Carried out ◯ Supervised	
Bracing ◯		◯ Carried out ◯ Supervised	
Other ◯		◯ Carried out ◯ Supervised	

KDC - Approved Building Consent Document - BC21-608_SP_ISSUED - Pg 17 of 177 - 29/09/2021 - vsingh

Design work that is RBW	Description of RBW	Carried out or supervised	Reference to plans and specifications
Tick ✓ if included. Cross ✗ if excluded	If appropriate, provide details of the RBW	Tick ✓ whether you carried out this design work or supervised someone else carrying out this design work	If appropriate, specify references
EXTERNAL MOISTURE MANAGEMENT SYSTEMS: E2			
All RBW design work relating to E2 ◯		◯ Carried out ◯ Supervised	
Damp proofing ◯		◯ Carried out ◯ Supervised	
Roof cladding or roof cladding system ◯		◯ Carried out ◯ Supervised	
Ventilation system (for example, subfloor or cavity) ◯		◯ Carried out ◯ Supervised	
Wall cladding or wall cladding system ◯		◯ Carried out ◯ Supervised	
Waterproofing ◯		◯ Carried out ◯ Supervised	
Other ◯		◯ Carried out ◯ Supervised	

KDC - Approved Building Consent Document - BC21-608_SP_ISSUED - Pg 18 of 177 - 29/09/2021 - vsingh

Design work that is RBW	Description of RBW	Carried out or supervised	Reference to plans and specifications
Tick ✓ if included. Cross ✗ if excluded	If appropriate, provide details of the RBW	Tick ✓ whether you carried out this design work or supervised someone else carrying out this design work	If appropriate, specify references
FIRE SAFETY SYSTEMS: C1 - C6			
Emergency warning systems Evacuation and fire service operation systems ◯ Suppression or control systems Other		◯ Carried out ◯ Supervised	

Note: The design of fire safety systems is only restricted building work when it involves small-to-medium apartment buildings as defined by the Building (Definition of Restricted Building Work) Order 2011.

WAIVERS AND MODIFICATIONS

Waivers or modifications of the Building Code are required. ◯ Yes ✓ No

If Yes, provide details of the waivers or modifications below:

Clause	Waiver/modification required
List relevant clause numbers of building code	Specify nature of waiver or modification of building code required

KDC - Approved Building Consent Document - BC21-608_SP_ISSUED - Pg 19 of 177 - 29/09/2021 - vsingh

ISSUED BY

Name and contact details of the licensed building practitioner who is licensed to carry out or supervise design work that is restricted building work.

Name: Stewart Hobbs	LBP or Registration number: 84415 IPENZ
The practitioner is a: ◯ Design LBP ◯ Registered architect ✓ Chartered professional engineer	
Design Entity or Company (optional): ProConsult	
Mailing address (if different from below):	
Street address/Registered office: Suite 2, 322 Remuera Road	
Suburb: Remuera	Town/City: Auckland
PO Box/Private Bag: P.O. Box 28 257	Postcode: 1541
Phone number: 09 973 5781	Mobile: 027 211 3999
After hours: 027 211 3999	Fax:
Email address: stewart@proconsult.co.nz	Website:

DECLARATION

I Stewart Hobbs LBP, state that I have applied the skill and care reasonably required of a competent design professional in carrying out or supervising the Restricted Building Work (RBW) described in this form, and that based on this, I also state that the RBW:

- Complies with the building code, or
- ~~Complies with the building code~~ subject to any waiver or modification of the building code recorded on this form

Signature: 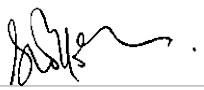

Date: 03/09/2021

WILEY GEOTECHNICAL

KDC - Approved Building Consent Document - BC21-608_SP_ISSUED - Pg 20 of 177 - 29/09/2021 - vsingh

23 June 2021

Gina Utting
ginautting@gmail.com

RE: Geotechnical Investigation for Proposed Residence at Lot 3, 760 Settlement Road, Hakaru.

Wiley Geotechnical Limited (WGL) was requested by Gina Utting to provide a geotechnical investigation and guidance on foundation design for a proposed relocation of a 4-bedroom dwelling and the construction of a new shed. We have received and reviewed a site plan produced by BCW Design Ltd (Ref 21036, dated April 2021). We understand the house is proposed to be constructed upon a timber pile foundation, and the shed is to be constructed upon a concrete foundation.

We have previously undertaken a geotechnical investigation on the property as part of the subdivision process (Our Reference #20034, dated May 2020). In our earlier investigation a single borehole was untaken on the site near the proposed house location, this earlier borehole has been included in this report.

WGL visited the site on the 9th of June 2021 and made the following observations:

- The site is located on a relatively flat section and is currently grassed
- The site is situated upon a gentle south west slope angled at 2 degrees with the northern treed area sloping to the north between 3 to 5 degrees.
- BH1 was conducted on the house building site, while BH2 was conducted on the shed site.
- The shed is located 3.0 m from back boundary, a 2.0 m high rock wall.
- The building platform for the dwelling has not been formed.
- No obvious signs of instability were noted.
- Two hand augers and six Scala Penetrometer (Scala) test were undertaken within potentially suitable building sites to a maximum depth of 2.1 m below ground level.

Geology

The GNS map for the site indicates that it is underlain by alluvium of the Tauranga Group comprising “Partly consolidated mud, sand, gravel and peat or lignite of alluvial, colluvial, lacustrine, swamp and estuarine origins”.

Seismic Hazards

Since there are no known active faults crossing the property, it is our opinion that ground rupture is unlikely at the subject property. Granular soils, such as sand, are susceptible to liquefaction in the event of future earthquakes. This may result in settlement or lateral deformation. Based on the regional earthquake risk (discussed further below) and depth to groundwater, it is our opinion that there is a

KDC - Approved Building Consent Document - BC21-608_SP_ISSUED - Pg 21 of 177 - 29/09/2021 - vsingh

relatively low risk of liquefaction induced settlement or lateral movement such that specific liquefaction design is not required.

We recommend that the future structures and improvements are designed to account for seismic shaking and ground motions. For seismic design at the site and in line with NZS 1170.5:2004 the corresponding design peak ground accelerations (PGA) for the site have been calculated from NZS 1170.5:2004 using the recommendations of the New Zealand Geotechnical Society as follows:

a_h = Z R C

In which:

Z = base PGA called “Hazard factor” and is given by Table 3.3 and Figures 3.3 and 3.4 of NZS 1170.5:2004. Z = 0.13 for areas north of Auckland.

R = “Return period factor” and is given by Table 3.5 of NZS 1170.5:2004 (R = 1.0 for 500 year return period and R = 0.25 for a 25 year return period)

C = Site response factor called “Spectral shape factor” in NZS 1170.5:2004 and is based on the seismic site classification. We consider this site to be **Class C**, based on soil depth and therefore C = 1.33.

The design PGA at the site is given as:

ULS: a_h = 0.13 x 1.00 x 1.33 = 0.17 (i.e. PGA = 0.17 g)

SLS: a_h = 0.13 x 0.25 x 1.33 = 0.04 (i.e. PGA = 0.04 g)

Field Exploration and Subsurface Conditions

WGL carried out a shallow subsurface investigation consisting of two hand augers with shear vane testing and six Scala Penetrometer (Scala) tests within the approximate areas shown on the site plan below.

KDC - Approved Building Consent Document - BC21-608_SP_ISSUED - Pg 22 of 177 - 29/09/2021 - vsingh



Figure 1: Approximate Subsurface Exploration Locations

The hand augers were carried out to depths of 2.1 m. The subsurface material encountered in our hand auger investigation generally consisted of a fill/topsoil underlain by a fill/silt with occasional topsoil inclusions. A buried topsoil layer was encountered for 50 mm at 0.45 m at BH1. A natural silt is then encountered from 0.5 m, with clay and plasticity increasing with depth and occasional orange brown and limonitic staining. The measured undrained shear strengths generally all exceeded 100 kPa. The results of the individual Scala tests are shown below. Our previous hand auger (HA1 in blue) encountered very stiff natural soils with measured undrained shear strengths greater than 200 kPa

Groundwater was not encountered during our testing. The groundwater level may vary from the depth measured at the time of exploration, as a result of seasonal change, recent precipitation and/or irrigation practices.

Based on this, it is our opinion that the material encountered in our subsurface investigation is broadly consistent with published geologic mapping. The bore logs are presented as an appendix to this report and are written in general accordance with the New Zealand Geotechnical Society field classification guidelines (NZGS, 2005).

KDC - Approved Building Consent Document - BC21-608_SP_ISSUED - Pg 23 of 177 - 29/09/2021 - vsingh

Scala Results

Scala blows/100mm at Lot 3, 760 Settlement Road, Hakaru						
(m)	Scala 1 (SP1)	Scala 2 (SP2)	Scala 3 (SP3)	Scala 4 (SP4)	Scala 5 (SP5)	Scala 6 (SP6)
0.1	1	1	1	1	1	1
0.2	3	2	2	1	1	3
0.3	2	2	2	3	1	2
0.4	2	3	3	3	2	2
0.5	3	3	4	2	2	3
0.6	1	3	3	2	4	2
0.7	3	4	3	3	5	3
0.8	3	3	2	4	5	4
0.9	4	4	2	4	5	4

Expansive Soils

Expansive clay and silt soils are common in the wider Northland region and have the tendency to shrink and swell, particularly with seasonal fluctuations of soil water content. This behavior has implications for foundation design and surface structures and should be incorporated during foundation design.

Based on our visual and field assessment of the soils encountered onsite, and our experience in the area, we consider that the Expansive Site Class for this site is “M - moderate” - in accordance with AS 2870. Accordingly, the minimum footing depth is 600 mm below cleared ground level.

Conclusions and Recommendations

It is our opinion that the proposed development is feasible from a geotechnical point of view, provided the recommendations presented in this report and standard development practices are incorporated in the design and construction of the project.

The soil underlying the site does **not** reach “good ground” in the upper metre as defined in NZS 3604 (2011) based on the Scala results as the requirement is 5 blows per 100 mm with a Scala Penetrometer; however, the shear vane readings indicate a suitable bearing capacity is available for the proposed house, with readings generally greater than 100 kPa.

Pile Foundation (Relocatable Dwelling)

It is our opinion that wooden piles designed in accordance with NZS3604 (2011) will provide a suitable foundation for the proposed dwelling. We recommend all piles are H5 treated and have a minimum 125 x 125 mm dimensions. We recommend that anchor piles are embedded to a minimum depth of 0.9 m, and all other piles are embedded to a minimum depth of 0.6 m. Pile holes should be bored with a minimum diameter of 400 mm.

KDC - Approved Building Consent Document - BC21-608_SP_ISSUED - Pg 24 of 177 - 29/09/2021 - vsingh

If a second-hand dwelling is being utilised, we recommend piles are located along the existing bearers in the same positions as previously located to transfer existing loads and provide supports for internal loads previously supported. If an alternative pile plan is proposed it will shall to be approved by a professional Structural Engineer familiar with this report.

The piles should meet NZS3640 Class H5, and cut surfaces should be retreated with a protective coating in accordance with the manufacturer's recommendations. The pole length should be sufficient to extend to the design foundation level, and provide the stick-up length necessary for the super-structure and planned floor levels. Piles should not be spliced.

All bored holes should be inspected by WGL, or a qualified geotechnical engineer, prior to continuing with foundation construction

A geotechnical ultimate bearing capacity of 450 kPa should be available.

Concrete Foundation (Shed)

We recommend that a minimum 300 mm layer of compacted hard fill is placed prior to applying blinding sand for any reinforced concrete slab and foundation elements have a minimum embedment depth of 0.6 m. We recommend a minimum 100 mm layer of compacted hard fill is placed for a waffle slab (i.e Rib-Raft) with the foundation being designed for expansive site class 'M – Moderate', as per AS 2870. All topsoil and fill material must be removed before foundation construction commences.

We recommend the following regarding hard fill and its placement:

- Underslab hard fill comprising GAP40/GAP65, or an equivalent approved product, should be placed across the building platform in 100 mm lifts and compacted using appropriate compaction plant (e.g. a hand held or excavator mounted vibrating compaction plate), and brought up to the finished design levels. We would recommend a high quality gravel without too many fines.
- For fills greater than 0.6 m. Every third layer of hard fill lift should be observed and tested by WGL to confirm that it has been placed to an appropriate specification. At this stage it is anticipated that compaction should be to achieve 95% of the maximum dry density (MDD) of the material, to be confirmed onsite using either a NDM (nuclear densometer) or Impact Hammer testing (Target 15 CBR).

A geotechnical ultimate bearing capacity of 300 kPa may be used in the design of a reinforced concrete slab or a waffle slab (i.e. Rib Raft). The ultimate bearing capacity should be available provided that the hard fill has been placed and certified according to the construction specification. We recommend WGL, or a qualified geotechnical engineer, inspect any excavations prior to the placing of any fill or foundation elements.

LIMITATIONS

(i) This report has been prepared for the use of our client, Gina Utting and their professional advisers and the relevant Regional Authorities in relation to the specified project brief described

KDC - Approved Building Consent Document - BC21-608_SP_ISSUED - Pg 25 of 177 - 29/09/2021 - vsingh

in this report. No liability is accepted for the use of any part of the report for any other purpose or by any other person or entity.

(ii) Assessments made in this report are based on the ground conditions indicated from published sources, site inspections and subsurface investigations described in this report based on accepted normal methods of site investigations. Variations in ground conditions may exist between test locations and therefore have not been taken into account in the report. If variations are found during excavation or at foundation preparation stage WGL should be notified immediately so we can amend our recommendations.

(iii) This Limitation should be read in conjunction with the IPENZ/ACENZ Standard Terms of Engagement.

We trust that this information meets your current requirements. Please do not hesitate to contact the undersigned on 021 0399 385 or matt@wileygeotechnical.co.nz if you require any further information.



Matt Wiley, CPEng

Principal Engineer

Attachments:

- Bore Logs

WILEY GEOTECHNICAL LTD

BOREHOLE No. BH1

SITE: Lot 3, 760 Settlement Road, Hakaru

REF: 21150

Sheet 1 of 1

REDUCED LEVEL (RL)	INFERRED GEOLOGY	DESCRIPTION OF SOIL	SOIL SYMBOL	DEPTH (m)	SAMPLE TYPE	WATER CONTENT (%)	WATER LEVEL	CORRECTED VANE SHEAR STRENGTH (kPa) ●Peak Field Vane ○Remoulded Field vane 50 100 150	SCALA PENETROMETER BLOWS / 100 mm 5 10 15
	Fill	FILL/TOPSOIL							
		FILL/SILT slightly clayey, slight plasticity, light brown, rare topsoil inclusions						200	
		TOPSOIL buried							
	Alluvium of the Tauranga Group	SILT slightly clayey, slight plasticity, light brown						87 ○ 147 ●	
		at 0.8 m increase in clay and plasticity		1				102 ○ 192 ●	
		at 1.5 m light grey with orange brown staining						200	
								200	
								200	
				2				200	
		E.O.B: 2.1 m (target depth)							
				3					
				4					
				5					

NOTES Groundwater was not encountered.
House site

LOGGED BY: CS & NH
DATE DRILLED: 09-Jun-21
DRILL METHOD 50 mm Hand Auger

KDC - Approved Building Consent Document - BC21-606_SP_ISSUED - Pg 26 of 177 - 29/09/2021

WILEY GEOTECHNICAL LTD

BOREHOLE No. BH2

SITE: Lot 3, 760 Settlement Road, Hakaru

REF: 21150

Sheet 1 of 1

REDUCED LEVEL (RL)	INFERRED GEOLOGY	DESCRIPTION OF SOIL	SOIL SYMBOL	DEPTH (m)	SAMPLE TYPE	WATER CONTENT (%)	WATER LEVEL	CORRECTED VANE SHEAR STRENGTH (kPa) ●Peak Field Vane ○Remoulded Field vane 50 100 150	SCALA PENETROMETER BLOWS / 100 mm 5 10 15
	TS	TOPSOIL dark brown, possible fill							
	Alluvium of the Tauranga Group	SILT slightly clayey, slight plasticity, brown						200	
		at 0.6 m increase in clay and plasticity						200	
				1				200	
		at 1.2 m light grey with orange brown staining						200	
								200	
		occasional limonitic staining, dark brown/orange brown		2				200	
		E.O.B: 2.1 m (target depth)						200	
				3					
				4					
				5					

NOTES Groundwater was not encountered.
TS = Topsoil
Shed site

LOGGED BY: CS & NH
DATE DRILLED: 09-Jun-21
DRILL METHOD 50 mm Hand Auger

KDC - Approved Building Consent Document - BC21-608_SP_ISSUED - Pg 27 of 177 - 29/09/2021 - vsingh

WILEY GEOTECHNICAL LTD

SITE: Settlement Road, Mangawhai

REF: 20034

BOREHOLE No. 1

Sheet 1 of 1

REDUCED LEVEL (RL)	INFERRED GEOLOGY	DESCRIPTION OF SOIL	SOIL SYMBOL	DEPTH (m)	SAMPLE TYPE	WATER CONTENT (%)	WATER LEVEL	CORRECTED VANE SHEAR STRENGTH (kPa) ● Peak Field Vane ○ Remoulded Field vane 50 100 150	SCALA PENETROMETER BLOWS / 100 mm 5 10 15
		TOPSOIL very fine silt, dark brown							
		SILT slightly clayey, friable, light brown with orange/brown staining, desiccation cracking, dry powdery slightly to moderately clayey		1 2				200 200 200 200 200 200 200	
		E.O.B: 2.1 m		3 4 5					

NOTES Groundwater was not encountered.

LOGGED BY: MW & JR

DATE DRILLED: 19-Mar-20

DRILL METHOD 50 mm Hand Auger

KDC - Approved Building Consent Document - BC21-608_SP_ISSUED - Pg 28 of 177 - 29/09/2021 - vsingh
Undifferentiated Melange of the Northland Allochthon

KDC - Approved Building Consent Document - BC21-608_SP_ISSUED - Pg 29 of 177 - 29/09/2021 - vsingh

25 June 2021

Client: Gina Utting
ginautting@gmail.com

WGL 21150

RE: On-site 'secondary' wastewater treatment / disposal system for a four-bedroom house and a sleepout at Lot 3, 760 Settlement Road, Hakaru.

Introduction

This document is to form part of building consent application for the relocation of a four-bedroom house and the construction of a sleepout (with toilet and shower) at 760 Settlement Road, Hakaru. Lot 3, DP 560279 (3991 m^2). Title and floor plan attached.

This report outlines the design and technical specifications for the on-site wastewater treatment and disposal system and ensures the chosen wastewater system meets all the relevant requirements from the Proposed Regional Plan for Northland, section C.6.1 (PRPN), Kaipara District Council as outlined in AS/NZS 1547:2012 and G13/VM4 of the NZ building code.

Site Assessment

WGL visited the site on the 9 June 2021and made the following observations:

- Lot 3 is a flat site with a gentle slope to the north.
- The proposed effluent site is to be located at the western (settlement road side) boundary of the section.
- A hand auger investigation was undertaken within a potential effluent field site. Ground cover is grass with some mature trees immediately adjacent to the boundary.
- No obvious signs of instability were noted.
- No evidence was seen or heard of the site being used for activities which could have led to site contamination.

Geology

The GNS geological unit QMAP shows the soils at the proposed site of the effluent field as being alluvium of the Tauranga Group. A geotechnical report for subdivision was undertaken by Wiley Geotechnical Ltd in May 2020 (report 20034). This report deems the soils to be "light clays" and Category 5 in terms of AS/NZS 1547 2012 with a DiR of 3.0 mm/day. Our borehole investigation was consistent with this with a dark brown topsoil to 250mm underlain by a light brown silt.

Design Recommendations: Re AS/NZS 1547 2012

Four-bedroom house equates to a six-person occupancy, and a sleepout with a toilet and shower equates to a 2-person occupancy. (6 + 2 = 8).

KDC - Approved Building Consent Document - BC21-608_SP_ISSUED - Pg 30 of 177 - 29/09/2021 - vsingh

The house is to have roof collection of potable water and standard water fixtures installed in the house including an automatic washing machine, daily effluent amounts to 180L/day/person, typical for a relocated house (table H3). Total daily wastewater for the house to be treated is 6 x 180L/day = 1080L/day.

The sleepout is to have standard water reduction fixtures including a dual flush cistern, shower flow restrictors, aerator faucets and a front-loading washing machine daily effluent amounts to 145L/day/person (table H3). Total daily wastewater to be treated is 2 x 145L/day = 290L/day

Total daily wastewater = 1080 + 290 = 1370L/day.

1,370L/day/3.0= 457 m2 **Effluent Field = 457 m².**

The owner has decided to install a 'Biocycle 8200' secondary wastewater an aerated filter wastewater treatment plant using a submerged fixed growth filter system. The Biocycle 8200 is manufactured and distributed by Biocycle Ltd, Hamilton. Manufacturers rated design capacity is 1400L/day and emergency storage 1600L. Technical specifications and OSET results are attached.

The effluent field is to be mole ploughed into the topsoil at a depth of at least 150mm. Where topsoil is less than 200mm extra topsoil will need to be added. A likely source of this extra topsoil is from the sleepout excavation. Effluent field is to be at least 1.5m off any boundary, 15m from any water body/course and 5m from any stormwater flow path downslope of the effluent field. The effluent field is to be installed on slopes under 10^0.

A reserve area is required to be made available in case of effluent field failure, the minimum size to be 30% of the effluent field size. **Reserve = 457 x 0.3 = 137, reserve = 137m².**

Stormwater to be discharged without attenuation as site coverage is less than 15%. Stormwater overflow from the rain water tanks to be taken to a dispersal trench downslope and north of the house. Final roof area of the house plus sleepout will be over 200m² but under 300m² and so length of in-ground trench to be 14m. See fig C21 attached. Any runoff from driveways should preferably be evenly spread across adjacent grass or into a grassed swale drain so as to abstract heavy metals and other pollutants before entering a watercourse. Piped discharge directly into a watercourse is not accepted these days as it adds to risk of pollution and to peak flood flow and scour of stream banks etc.

Key Environmental Effects

- **The Impact on <u>ground-water</u> *quantity*** from the system will be close to zero as no more water will arrive on the Lot as supply is roof-water, and effluent will be taken up by the grass on the effluent field and stimulate growth. Ground water *quality* will be protected by these taking up the nutrients (nitrates and phosphates) and by micro-organisms in the soil digesting any *e coli*.
- **The Impact on <u>surface-water.</u>** The amount of surface water run-off will be reduced by the increased vegetative growth. Some of the surface water will be taken up by the grass. The extra grass will provide a protective layer above the soils reducing erosion in times of heavy rainfall. The flow on effect is an improvement of **water quality** down-stream. Having some of the roof water applied to the effluent field on fine days will even out the application of water to the ground on the Lot, thereby tending to reduce peak flows to ground. This is a desirable effect.
- **The Impact on <u>soils</u>.** The effect on the soils will be beneficial as the nutrients will not only promote plant growth but also increase the micro-biological activity in the soils themselves and slowly convert any inorganic clays to organics. The topsoil depth will therefore increase over the years as the subsoils become more organic. Less topsoil can be washed away by heavy

KDC - Approved Building Consent Document - BC21-608_SP_ISSUED - Pg 31 of 177 - 29/09/2021 - vsingh

rain as it is protected by the increased grass growth. The soils will benefit from the aeration from the installation of the dripper lines.

- **The Impact on <u>Amenity Values.</u>** The effects to flora will be positive in that the adjacent trees will get added nutrients and moisture. The effects on fauna will also be positive in that the boosted tree and grass growth will provide a habitat attractive to birds, insects and people. Not only will this support local diversity, it will create a more pleasantly aesthetic setting for residents and neighbours.

Mitigation Measures

- **Potential odour and noise**.
  When the irrigation pump operates a very small noise can be heard as the effluent fills the dripper lines. The sound is negligible. A slight hum can be heard from the aerator which operates 24/7. When operating correctly the system is odorless.
- **Measures to protect against system failure**
  In the case of a mechanical failure, a high level float is installed in the irrigation chamber with a visible alarm on the control box. This will allow plenty of time to rectify any faults with plenty of emergency storage available (1600L). In the case of a dripper line failure in the effluent field, a 137m2 (30%) reserve area is available.
- **Maintenance plan**
  An annual service is recommended for all secondary wastewater systems. This is to be organized by the owner before COC is issued.

Items not to be flushed:

- No bleaches or chlorine (i.e. Napisan – Bleach – Janola). These products are designed to kill bugs and will kill off the bacteria in the tank causing smells and constant blocking of the Bio (internal) filter. You can use these products if used in a bucket and tip on the lawn or safe place, not down your drain
- **No fats or oils down drains**. Fats and oils may block the tank filters and kill the bacteria in the tank.
- No tea leaves or coffee grounds down drains. These may block the filters in the tank and the external filter.
- No washing paint brushes or disposing of paints down drains. These products will not only kill bacteria in the tank, but the residue is very difficult and costly to remove.
- No disposable nappies, sanitary napkins, tampons or condoms. These products do not break down and cause a mass build up in the tank, and can cause blockages that can be costly to clean.
- Do not have a waste disposal unit. This waste takes a long time to break down and the system will require frequent emptying which is very costly.
- Use low sudsing laundry powder/liquid and non-caustic dish washing powder.

KDC - Approved Building Consent Document - BC21-608_SP_ISSUED - Pg 32 of 177 - 29/09/2021 - vsingh

Wastewater Summary for Drainlayer

1 Install a Biocycle 8200 wastewater system approved to AS/NZS 1547:2012 standards, at least 3m away and downhill from the house and sleepout sites.

2 Mole plough into the topsoil (at least 150mm deep) 457m^2 of pressure compensating drip irrigation line with an emitter flow rate of 1.6lph, 500mm dripper spacing and 1.0m spacing between laterals. At no point should the lines be closer than, 1.5m from any boundary or 5m from the settlement road water table, see wastewater site sketch for location.

3 Where the existing topsoil is under 200mm deep extra topsoil will need to be added. The topsoil from the shed excavation a possible source.

4 Do not install on slopes over 10^0.

5 System to be installed and maintained as per manufacturers recommendations, including regular de-sludging of the primary treatment tank and dripper line flush.

6 Because the effluent field is sub surface laid this area is to be fenced from stock.

7 Once the system is operational obtain a commissioning statement from the drainlayer who installed it and send it to the supplier to obtain a warranty.

8 Stormwater overflow from the rain water tanks to be taken to an inground dispersal trench downslope and north of the house. Length of in-ground trench to be 14m. See fig C21 attached.

9 Ensure a service contract is in place.

I trust that this information meets your current requirements. Please do not hesitate to contact the undersigned on 09 421 5353 or cam@wileygeotechnical.co.nz if you require any further information.

Report prepared by:



Cameron Shaw

Wastewater Designer reg 3298



Matt Wiley, CPEng

Principal Engineer

KDC - Approved Building Consent Document - BC21-608_SP_ISSUED - Pg 33 of 177 - 29/09/2021 - vsingh

Figure C21
Conceptual Layout of Flow Dispersal Trench

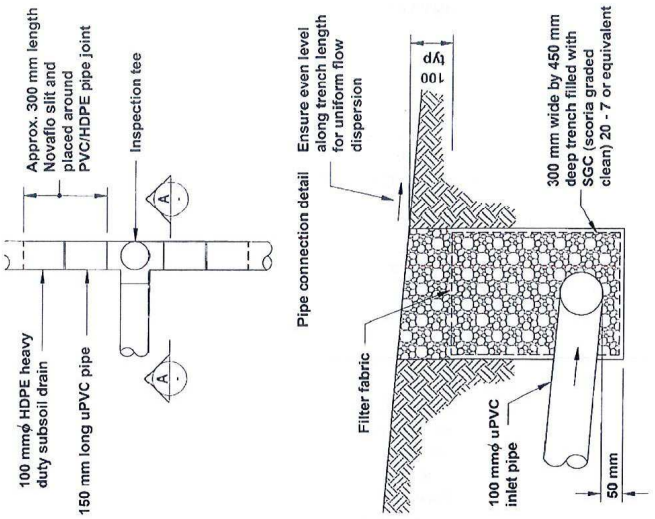

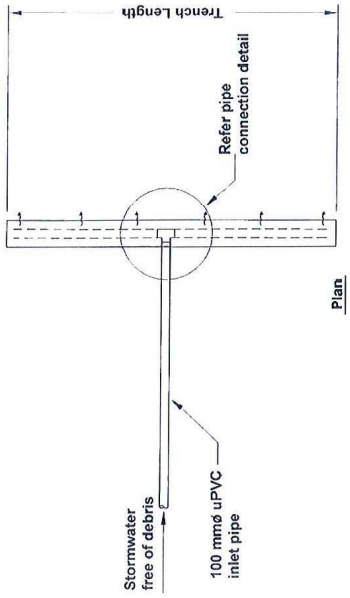

Plan

Keep dispersal trench 30 m clear of property boundary

Design Parameters

Effective catchment area drained (m^2)	Trench Length (m)
100	8
200	12
300	14
400	16
500	18
600	20

(Note: effective catchment area drained = impervious area + 0.72 x pervious area

Wiley Geotechnical Ltd

Client: Gina Utting
ginautting@gmail.com

WGL 21150

RE: On-site 'secondary' wastewater treatment / disposal system for a four-bedroom house and a sleepout at Lot 3, 760 Settlement Road, Hakaru.

Wastewater site sketch

457m2 effluent field. To be mole ploughed.

137m2 reserve area.

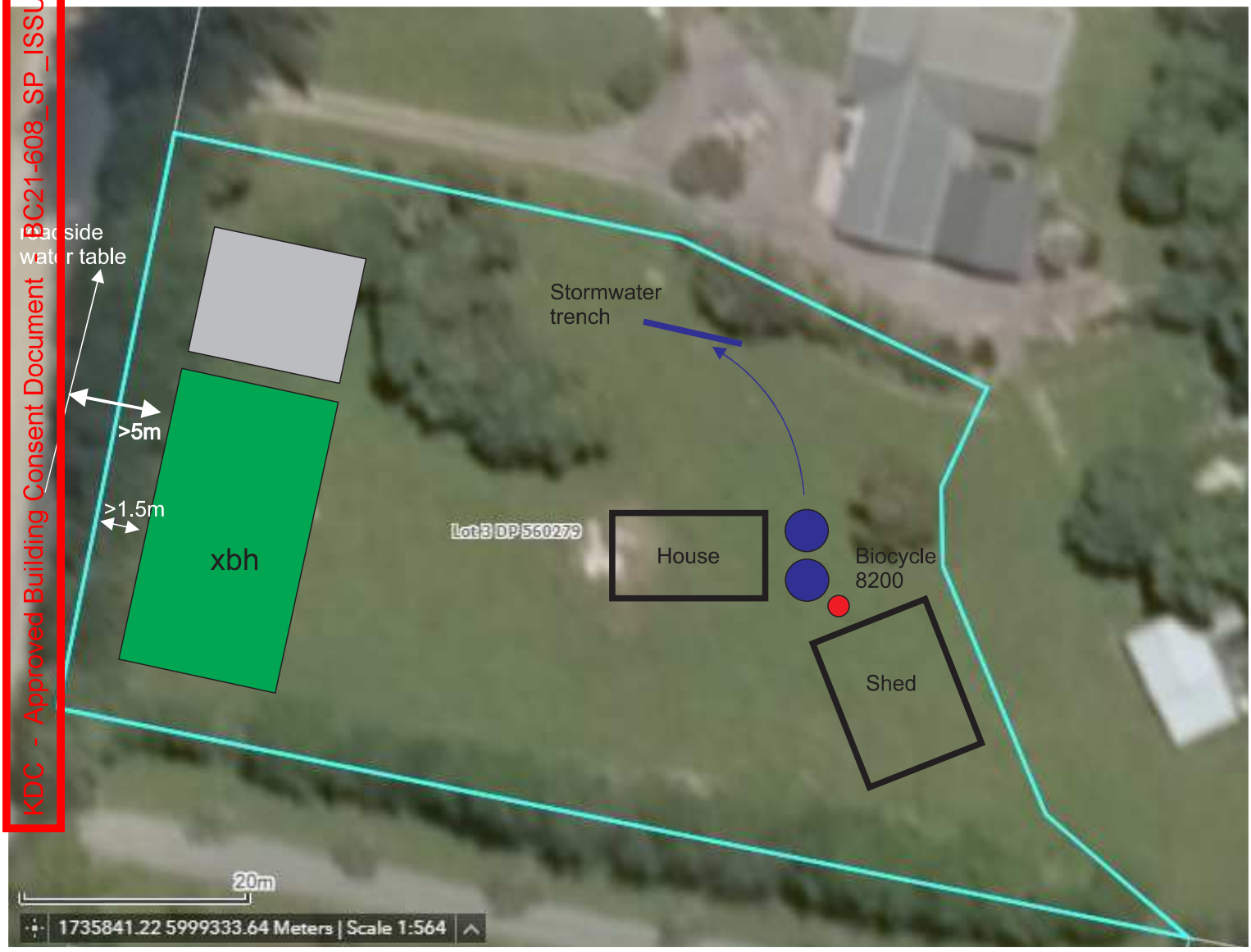

KDC - Approved Building Consent Document - BC21-608_SP_ISSUED - Pg 34 of 177 - 29/09/2021 - vsingh

KAIPARA DISTRICT

Kaipara te Oranganui • Two Oceans Two Harbours

KAIPARA DISTRICT COUNCIL

KDC - Approved Building Consent Document - BC21-608_SP_ISSUED - Pg 35 of 177 - 29/09/2021 - vsingh

Producer Statement

Design: On-Site Effluent Disposal Systems (AS/NZS 1547:2012)

Issued by: Cameron Shaw ..... (approved qualified design professional)

To: Gina Utting ..... (owner)

To be supplied to: Kaipara District Council.....

Property Location: 760 Settlement Road, Hakaru

.....

Lot 3 .....DP 560279.....Valuation Number.....

To Provide: Design an onsite effluent disposal system that will comply with the principles and procedures of AS/NZS 1547:2012 and provide a schedule to the owner for the system's maintenance.

The Design: Has been designed in accordance with Verification Method G13/VM4 On-Site Disposal and B2 (durability 15 years) of the Building Regulations 1992 in Compliance with the New Zealand

Building Code

As an independent approved design professional covered by a current policy of Professional Indemnity Insurance (Design) to a minimum value of $200,000, **I believe on reasonable grounds** that subject to:

1 Site verification – An Installation and commissioning report verifying the system and all components have been installed and operate in conformity with the design is required upon completion in accordance with 6.2.5.4, AS/NZS1547(2012).

2 The proposal All proprietary products met the performance requirements.
the proposed design will meet the re levant provisions of the Building Code and Northland Regional Council discharges rules.

☐ I understand and accept that Council may rely on this document, for the purposes of establishing compliance with the above building consent and that the content including the signature, whether electronic or not, is truly representative and authoritative of the information contained.

Cameron Shaw ..... Digitally signed by Cameron Shaw DN: C=US, E=csmangawhai@gmail.com, O=Wiley Geotechnical Ltd, OU=Wastewater Design, CN=Cameron Shaw Date: 2019.12.27 09:27:35+13'00' (Signature of approved design professional)

Approved designer, BSc ..... (Professional qualifications)

3298 ..... (Licence Number or professional Registration number)

Address Unit 4, 6 Molesworth Drive, Mangawhai .....

.....

Telephone Number 09 4315353 ..... Fax Number .....

Cellphone ..... Date 24 June 2021 .....

KAIPARA DISTRICT

Kaipara te Oranganui • Two Oceans Two Harbours

KAIPARA DISTRICT COUNCIL

KDC - Approved Building Consent Document - BC21-608_SP_ISSUED - Pg 36 of 177 - 29/09/2021 - vsingh

Note: This form is to accompany every application for a Building Consent incorporating AS/NZS 1547:2012 Approval as a design professional is at Council's discretion.

Kaipara District Council

AS/NZS 1547:2012

On-site Wastewater Disposal Site and Soil Evaluation

KAIPARA DISTRICT

KDC - Approved Building Consent Document - BC21-608_SP_ISSUED - Pg 37 of 177 - 29/09/2021 - vsingh

Part A: Owners Details

1 Applicant Details:

Applicant Name	Gina Utting	
Company Name		
	First Name(s)	Surname
Property Owner Name(s)	Gina & Dawn	Utting & Owens
Nature of Applicant*	Owner	

*(*i.e. Owner, Leaser, Prospective Purchaser, Developer)*

2 Consultant / Site Evaluator Details:

Consultant/Agent Name	Wiley Geotechnical Ltd			
Site Evaluator Name	Cameron Shaw			
Postal Address				
Telephone Number	Business	094315353	Private	
	Mobile		Fax	
Name of Contact Person				
E-mail Address	cam@wileygeotechnical.co.nz			

3 Are there any previous existing discharge consents relating to this proposal or other waste discharge on this site?

Yes		No	✔	Please tick
If yes, give reference numbers and description				

KDC - Approved Building Consent Document - BC21-608_SP_ISSUED - Pg 38 of 177 - 29/09/2021 - vsingh

4 List any other consent in relation to this proposal site and indicate whether or not they have been applied for or granted

If so, specify Application Details and Consent N°.

(E.g. Land Use, Water Take, Subdivision, Earthworks Stormwater Consent)

Part B: Property Details

1 Location Details

Physical Address of Property	760 Settlement Rd, Hakaru.
Territorial Local Authority	**Kaipara District Council**
Regional Council	**Northland Regional Council**
Legal Status of Activity	Permitted: ✔ Controlled: ☐ Discretionary: ☐
Relevant Regional Rule(s)	section C.6.1 (PRPN),
Total Property Area (m²)	3,911
Map Grid Reference of Property if Known	36 08 27.50S 174 30 33.69E

2 Legal description of land (as shown on Certificate of Title)

Lot N°	3	DP N°	560279	CT N°	
Other (specify)					

Please ensure copy of Certificate of Title is attached.

KAIPARA DISTRICT

KDC - Approved Building Consent Document - BC21-608_SP_ISSUED - Pg 39 of 177 - 29/09/2021 - vsingh

Part C: On-Site Evaluation

(Refer AS/NZS 1547:2012 See Appendix D)

Has a relevant property history study been conducted?

Yes		No	✓

(Please tick one)

If yes, please specify the findings of the history study, and if not please specify why this was not considered necessary.

No evidence of pre-European or early European settlement at the time of our site visit.

recent council approved subdivision

1 Has a Slope Stability Assessment been carried out on the property?

Yes		No	✓

If **No**, why not?

effluent field on flat land

Please tick

If **Yes**, please give details of report (if possible, please attach report):

Author	
Company/Agency	
Date of Report	
Brief Description of Report Findings:	

KAIPARA DISTRICT

KDC - Approved Building Consent Document - BC21-608_SP_ISSUED - Pg 40 of 177 - 29/09/2021 - vsingh

2 Site Information (See Table 1 attached):

Provide descriptive details below:
Performance of Adjacent Systems: primary on next door house working well.
Estimated Rainfall and Seasonal Variation:
Information available from **N.I.W.A MET RESEARCH**
Vegetation / Tree Cover: grass
Slope Shape: (Please provide diagrams) flat
Slope Angle: under 2 degrees
Surface Water Drainage Characteristics: downhill to north
Flooding Potential: Yes ☐ / No ☑
If **Yes**, specify relevant flood levels on appended site plan i.e. one in five years and/or 20 year and/or 100 year return period flood level, relative to disposal area.
Surface Water Separation: 110m north east to Hakaru river
Site Characteristics: or any other limitation influencing factors proximity to boundary, topsoil depth

3 Site Geology Check Rock Maps

Alluvium of the Tauranga Group	
Geological Map Reference Number	NZL GNS

4 What Aspect(s) does the proposed disposal system face? (please tick)

North	☐	**West**	☐
North-West	☐	**South-West**	☐
North-East	☑	**South-East**	☐
East	☐	**South**	☐

KAIPARA DISTRICT

KDC - Approved Building Consent Document - BC21-608_SP_ISSUED - Pg 41 of 177 - 29/09/2021 - vsingh

5 Site clearances (Indicate on site plan where relevant)

Separation Distance from	Proposed Clearances (m)	Septic Tank Treated Allowed(KDC+	Secondary Treated Allowed (KDC+NRC)
Boundaries	1.5	1.5 m	1.5 m
Surface water (i.e. permanent or intermittently flowing rivers, creeks,	110m		
Groundwater Bores horizontal distance	na	20 m	20 m
Subsurface water vertical separation	>1.2m		
Embankments/retaining walls	na	1.5 m	1.5 m
Other			
Reserve area set aside	30%	100 %	30 %

Part D: Site Assessment - Subsoil Investigation

(Refer AS/NZS 1547:2012 clause D2, Appendix D Site-and-Soil for Individual Lots

1 Please identify the soil profile determination method:

Test Pit		(Depth_____m)	Nº of Test Pits	
Bore Hole	1	(Depth_____m)	Nº of Bore Holes	1
Other (specify):				

Soil Report attached?

Yes	✔	No	

Please tick

2 Was fill material intercepted during the subsoil investigation?

Yes		No	✔

Please tick

If yes, please specify the effect of the fill on wastewater disposal

KAIPARA DISTRICT

KDC - Approved Building Consent Document - BC21-608_SP_ISSUED - Pg 42 of 177 - 29/09/2021 - vsingh

3 Percolation testing (Soil Permeability) (Recommended for conventional trenches in all clay soils)

Please specify the method (refer to Appendix G AS/NZS 1547:2012					
Test Report Attached?	Yes	☐	No	☐	Please tick

4 Are surface water interception/diversion drains required?

Yes	☐	No	☑	Please tick

If yes, please show on site plan

4a Are subsurface drains required

Yes	☐	No	☑	Please tick

If yes enter details

5 Please state the depth of the seasonal water table:

Winter	>1.2	m	Measured	☑	Estimated	☐
Summer	>1.2	m	Measured	☐	Estimated	☑

6 Are there any potential storm water <u>short circuit paths</u>?

Yes	☐	No	☑	Please tick

If the answer is yes, please explain how these have been addressed

7 Estimated soil category *(Refer AS/NZS 1547:2012 (See E4.1 and Table E1)*

Is Topsoil Present?	cat 5	If so, Topsoil Depth?	0.2	(m)

KDC - Approved Building Consent Document - BC21-608_SP_ISSUED - Pg 43 of 177 - 29/09/2021 - vsingh

Classification	Properties	Tick One
Sand	Very little to no coherence, cannot be molded., single grains	☐
Loamy sand	Slightly coherence, give a short ribbon 5mm that breaks easy	☐
Sandy loam	Forms a cast but will not roll in a ball. Individual sand grains can be seen	☐
Fine sandy loam	As for Sandy loam. Individual sand grains cannot be seen	☐
Loam	As for Sandy loam. But cast feels spongy	☐
Silty loam	As for loams but not spongy. Very smooth and silky	☐
Sandy clay loam	Can be rolled into a ball. Sand grains can be felt	☐
Fine sandy clay Loam	As for sandy clay loam but no sand grains visible	☐
Clay loam	Can be rolled into a ball with spongy feel, slightly plastic	☐
Silty clay loam	As for clay loams but not very spongy. Very smooth and silky	☐
Sandy clay	Forms a plastic ball in which sand grains can be seen, felt and heard	✓
Light clay	Smooth plastic ball that can be rolled into a rod. Slight resistance to shearing	✓
Silty clay	As for light clay but very smooth and silky	☐
Medium clay	Smooth plastic ball like plasticine. Can be moulded. Some resistance to ribboning	☐
Heavy clay	Smooth plastic ball like plasticine. Can be moulded. Firm resistance to ribboning	☐

Reasons for placing in stated category

PART E: Discharge Details

1 Water supply source for the property (please tick):

Rainwater (roof collection)	✓
Bore/well	☐
Public supply	☐

KAIPARA DISTRICT

KDC - Approved Building Consent Document - BC21-608_SP_ISSUED - Pg 44 of 177 - 29/09/2021 - vsingh

2 Calculate the maximum daily volume of wastewater to be discharged, unless accurate water meter readings are available

(Refer AS/NZS 1547:2012 See 5.5.5 and Appendix L, M and N

Number of Bedrooms	1 - 2 - 3 - 4 - 5 - 6			4 + 1
Design Occupancy	8			(Number of People)
Per capita Wastewater Production	140	160	180	(tick) (Litres per person per day)
Other - specify	200	220	145	
Total Daily Wastewater Production	1370			(litres per day)

3 Do any special conditions apply regarding water saving devices

A) Full water Conservation Devices?	Yes	☐	No	☑	Please tick
b) Water Recycling – what %?	%	☐	No	☐	Please tick

If you have answered yes, please state what conditions apply and include the estimated reduction in water usage.

roof collection and standard water reduction fixtures dual flush cistern, shower flow restrictors, aerator faucets and front-loading washing machine roof (only for sleepout, house standard features) (145L/pp/day sleepout) (180L/day/pp house)

4 Is Daily Wastewater Discharge Volume more than 3000 litres per day:

Yes	☐	Please tick
No	☑	Please tick

Note if answer to the above is yes, an N.R.C wastewater discharge permit will be required

KAIPARA DISTRICT

KDC - Approved Building Consent Document - BC21-608_SP_ISSUED - Pg 45 of 177 - 29/09/2021 - vsingh

PART F: Primary Treatment

(Please also refer to NRC rules)

1 Please indicate below the no. and capacity (litres) of all septic tanks including type (single/dual chamber grease traps) to be installed or currently existing: If not 4500 litre dual chamber, explain why not.

Number of Tanks	Type of Tank	Capacity of Tank (Litres)
	primary 2,900L Anoxic 600L aeration 2,800L Clarification 1,200L	
	Total Capacity	7,800L

2 Type of Septic Tank Outlet Filter to be installed?

(min 3.5mm screen required see NRC rules)

Azud 130 micron final filter

PART G: Secondary and Tertiary Treatment

(Please also refer to NRC rules)

1 Will the discharge effluent have a 5-day biochemical oxygen demand (BOD5) that is less than or equal to 30 grams per cubic metre and the total suspended solids (TSS) concentration that that is less than or equal to 45 grams per cubic metre?

(Manufacturers specifications required see NRC rules)

Yes	✓	No		(Please tick)	No means this is considered a primary system

KDC - Approved Building Consent Document - BC21-608_SP_ISSUED - Pg 46 of 177 - 29/09/2021 - vsingh

2 Please indicate the type of additional treatment, if any, proposed to be installed in the system: (please tick)

Secondary Treatment	✔		
Home aeration plant	✔		
Commercial aeration plant			
Intermediate sand filter			
Recirculating sand filter			
Recirculating textile filter			
Clarification tank	✔		
Tertiary Treatment			
Ultraviolet disinfection			
Chlorination			
Other		Specify	

PART H: Land Disposal Method

(Refer AS/NZS 1547:2012 appendices L, M and N)

1 Please indicate the proposed loading method: (please tick)

Gravity	
Dosing Siphon	
Pump	✔

2 High water level alarm to be installed in pump chamber(s)

Yes	✔	No	

If not to be installed, explain why.

3 If a pump is being used, please provide the following information:

Total Design Head	26 or 32	(m)
Pump Chamber Volume	300L	(Litres)
Emergency Storage Volume	1600L	(Litres)

KAIPARA DISTRICT

KDC - Approved Building Consent Document - BC21-608_SP_ISSUED - Pg 47 of 177 - 29/09/2021 - vsingh

4 Please identify the type(s) of land disposal method (land application systems) proposed for this site: (please tick)

(Refer AS/NZS 1547:2012 appendix K)

Surface Dripper Irrigation	☐		
Sub-surface Dripper irrigation	✓		
Standard Trench	☐		
Deep Trench	☐		
Mound	☐		
Evapo-transpiration Beds	☐		
Other	☐	Specify	

5 Please identify the loading rate you propose for the option selected in the above, stating the reasons for selecting this loading rate:

(Refer to AS/NZS 1547:2012 appendix L)

Loading Rate 3.0mm/m2/day		(Litres/m2/day)
Disposal Area 594	Design 457	(m2)
	Reserve 137	(m2)

Explanation

(2 x 145 = 290) + (6 x 180 = 1080) = 1370/3.0 = 457m2. reserve 457 x 30% = 137m2

KAIPARA DISTRICT

KDC - Approved Building Consent Document - BC21-608_SP_ISSUED - Pg 48 of 177 - 29/09/2021 - vsingh

6 What is the available reserve wastewater disposal area?

Reserve Disposal Area (m²)	137m2
Percentage of Primary Disposal Area (%)	30

7 Please provide a detailed description of the design and dimensions of the disposal field and attach a detailed plan of the field relative to the property site:

Description and Dimensions of Disposal Field:

see wastewater site sketch

Plan Attached?	Yes	✓	No		Please tick

If not, explain why not

PART I: Maintenance & Management

(Please also refer to NRC rules)

1 Has a maintenance agreement been made with the treatment and disposal system suppliers?

Yes		No		Please tick

Name of Suppliers

Biocycle Hamilton

KAIPARA DISTRICT

KDC - Approved Building Consent Document - BC21-608_SP_ISSUED - Pg 49 of 177 - 29/09/2021 - vsingh

PART J: Assessment of Environmental Concerns

1 Is an assessment of environmental concerns included with application? *(Refer Fig 4.1C3)*

Yes	✔	No		Please tick

If Yes, list and explain possible effects

PART K: Is Your Application Complete?

1 Is a Northland Regional Council Discharge Consent Required?

Yes		No	✔	Please tick

2 In order to provide a complete application you have remembered to:

Fully Complete this Assessment Form	yes
Include a *Location Plan* and *Site Plan* (with Scale Bars)	yes
Attach an Assessment of Environmental Concerns	yes

3 Declaration

☐ I understand and accept that Council may rely on this document, for the purposes of establishing compliance with the above building consent and that the content including the signature, whether electronic or not, is truly representative and authoritative of the information contained.

I hereby certify that, to the best of knowledge and belief, the information given in this application is true and complete.

Name	Matt Wiley	Signature	Matt Wiley Digitally signed by Matt Wiley DN: C=NZ, E=matt@wileygeotechnical.co.nz, OU=Wiley Geotechnical Ltd, CN=Matt Wiley Date: 2020.03.17 10:08:14+13'00'
Position	Principle engineer. CPENG	Date	24 June 2021

Note:

Any alteration to the site plan or design after approval will result in non-compliance.

An Installation and commissioning report verifying the system and all components have been installed and operate in conformity with the design is required upon completion in accordance with 6.2.5.4, AS/NZS1547(2012)is required before the Code Compliance Certificate can be issued.

KC_Approved Building Consent Document - BC21-608_SP_ISSUED - Pg 50 of 177 - 29/09/2021 - vsingh

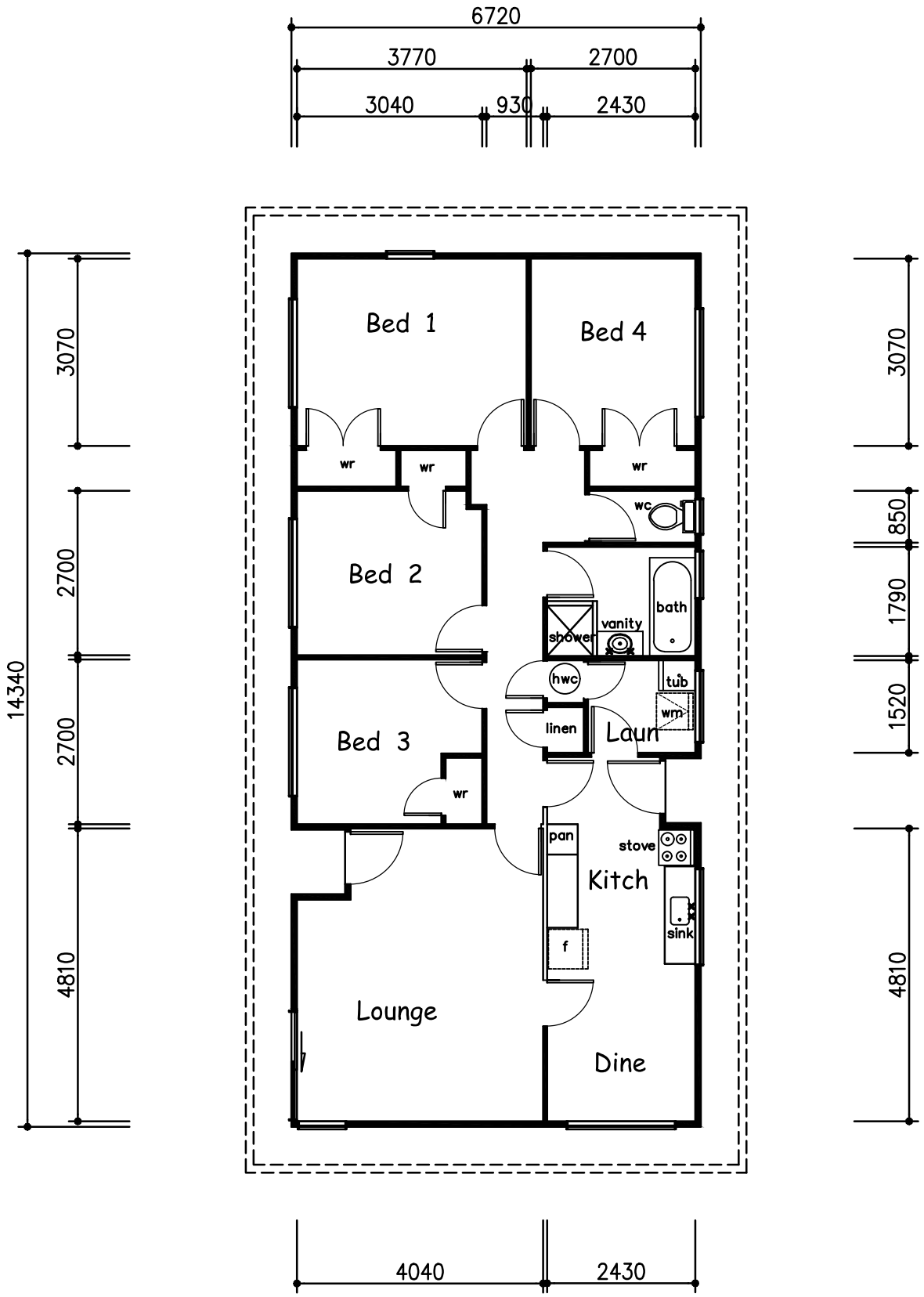

Floor Layout

96.36m²

All dimensions are to the framing, before commencing any works on the building verify dimensions.

HHR 126

BCW Design Ltd
54 Halsey Drive
Lynfield 1042
Ph 09 626 3803
Mob 0274 887 377
bruce@bcwdesign.co.nz

House for Relocation ex 5 Topliss Drive

Drawn by B. C. Wood
Scale 1:100 (A4)
Date 22.04.2021

Job No 21036

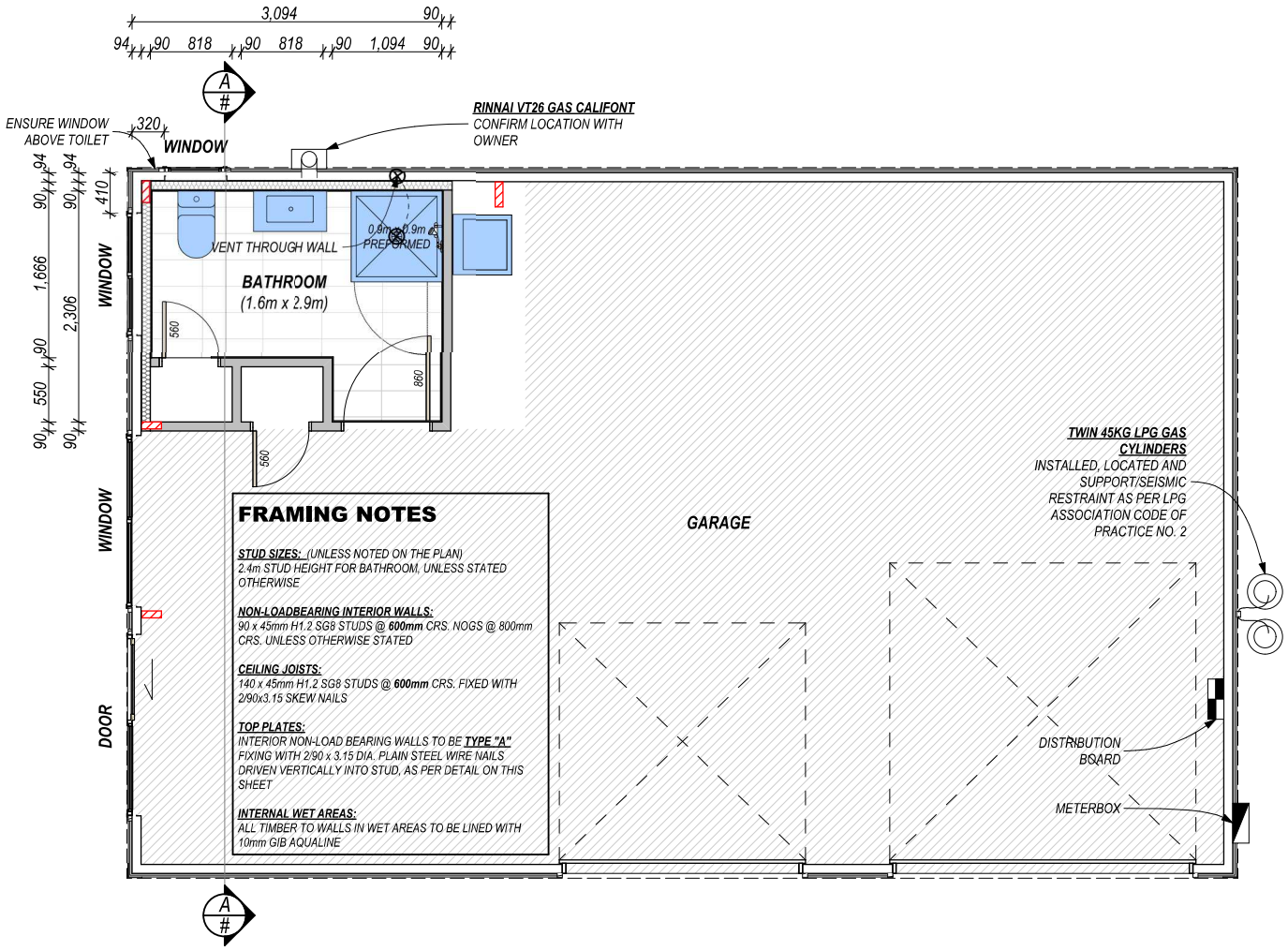

FLOOR PLAN

1:50

FLOOR FINISHES:
HATCHING SHOWN INDICATING FLOORING FINISH INDICATIVE ONLY. CONFIRM LOCATION AND EXTENT WITH OWNER

DIMENSIONS:
CONTRACTOR IS TO CONFIRM ALL DIMENSIONS ONSITE BEFORE COMMENCING ANY WORKS

G4 VENTILATION:
NATURAL VENTILATION =
- 5% OF FLOOR AREA (OPENABLE WINDOW)

MECHANICAL VENTILATION =
REFERENCE AS1668.2 TABLE B1 EXTRACT RATES

- BATHROOM/TOILETS:	MIN. 25L/S
- LAUNDRIES:	MIN. 20L/S
- KITCHENS:	MIN. 50L/S

JOINERY NOTES:

(JOINERY)
DOUBLE GLAZED CLEAR , ALUMINIUM POWDERCOATED JOINERY.
ALL UNITS VIEWED FROM EXTERIOR
ALL DIMENSIONS ARE **TRIM** SIZE (NOT WINDOW SIZE)
CONFIRM BEFORE COMMENCING CONSTRUCTION.
ALL JOINERY TO BE POWDERCOATED ALUMINIUM AND BE INSTALLED IN STRICT ACCORDANCE WITH THE MANUFACTURERS REQUIREMENTS.
ALL JOINERY TO HAVE H3.1 JAMBLINERS.
ALL GLAZING BELOW 800mm FROM F.F.L. TO BE TOUGHENED SAFETY GLASS

JOINERY MANUFACTURER TO CHECK AND VERIFY ALL DIMENSIONS, AND STRUCTURAL SUPPORTS WHERE REQUIRED.

GLAZING TO COMPLY WITH THE FOLLOWING STANDARDS
NZS 3504: SPECIFICATION FOR ALUMINIUM WINDOWS
NZS 4223: CODE OF PRACTICE FOR GLAZING IN BUILDINGS
NZS 4211: SPECIFICATION FOR THE PERFORMANCE OF WINDOWS

ALL GLASS SHOWER SCREENS TO BE TOUGHENED SAFETY GLASS TO COMPLY WITH NZS 4223:

ANY WINDOW SILL CLOSER THAN 760mm TO THE TOP OF A TOILET SEAT OR WINDOW SEAT TO HAVE RESTRICTORS INSTALLED AS PER F4/AS1 2.0 AND BE TOUGHENED SAFETY GLASS TO COMPLY WITH NZS 4223:

GLASS, TOUGHENED AS REQUIRED FOR PANE SIZE.
ALL FIXINGS AND FLASHINGS TO MANUFACTURERS DETAILS AND SPECIFICATIONS.
INSTALL WITH FLASHING TAPE SYSTEM TO WRAP MANUFACTURERS SPECIFICATIONS AND DETAILS.

FINISHES TO ALL SILL TRAYS AND FLASHINGS TO MATCH JOINERY FRAMES.

REV.	DATE	DESCRIPTION	DRAWN
A	07/10/19	WDC RFI	CC

BARNES SHED
TUDEHOPE ROAD, MATARAU, WHANGAREI

FLOOR PLAN

****BC SET ONLY****

JOB NO:	0097
REVISION:	A
SHEET SIZE:	A3
PAGE:	03 OF 5
DATE:	14/10/2019
DRAWN:	CC

EXPOSURE ZONE C: FIXINGS ARE TO COMPLY WITH NZBC B2 DURABILITY AND NZS 3604:2011 SECTION 4 - DURABILITY.
ALL EXPOSED FIXINGS AND FIXINGS WITHIN 600mm OF GROUND LEVEL (SHELTERED & EXPOSED) TO BE TYPE 304 STAINLESS STEEL

NOTE
ALL BOLTS SHALL HAVE 50SQ X 3MM WASHERS TO TIMBER FACES

FLASHING AND WRAP SYSTEMS
ALL FLASHINGS, FLASHING TAPES, WRAPS, UNDERLAYS AND ASSOCIATED ACCESSORIES ARE TO BE INSTALLED STRICTLY IN ACCORDANCE WITH THE MANUFACTURERS SPECIFICATIONS.

LIGHTING
ARTIFICIAL LIGHTING TO COMPLY WITH NZBC G8/AS1
SMOKE ALARMS -IF REQUIRED
SMOKE ALARMS SHALL COMPLY WITH APPROVED DOCUMENT F7 WARNING SYSTEMS.

CONFIRM THE LOCATION OF THE FOLLOWING WITH OWNER PRIOR TO INSTALLATION:
- FLOOR COVERINGS - CONFIRM LOCATION, EXTENT AND DIRECTION OF FLOOR COVERINGS SHOWN
- METER BOX & DISTRIBUTION BOARD

WET AREAS WATERPROOFING SYSTEM OPTIONS.
ALL DETAILS/WINDOWS TO COMPLY WITH NZBC E3 INTERNAL MOISTURE AND MANUFACTURER'S PRODUCT DETAILS.
PROVIDE AN IMPERVIOUS AND EASILY CLEANABLE SURFACE TO ALL WALLS & FLOOR AREAS LIKELY TO BE SPLASHED TO COMPLY WITH E3/AS1. (WALLS)
GIB AQUALINE TO BATHROOM WALLS
WET AREA VENTILATION.
TO COMPLY WITH NZBC G4 VENTILATION

INTERIOR DOORS
TYPICAL DOORS:
1980mm PAINT QUALITY HOLLOW CORE DOORS WITH 18mm PAINT QUALITY DOOR JAMBS UNLESS STATED OTHERWISE

INSULATION
WALL INSULATION: R2.2 WALL INSULATION TO EXTERIOR BATHROOM WALL

TIMBER TREATMENT:
TREATMENT LEVELS TO COMPLY WITH NZBC CLAUSE B2/AS1 DURABILITY, NZS3602. TIMBER AND WOOD BASED PRODUCTS FOR USE IN BUILDING AND NZS3640 CHEMICAL PRESERVATION OF ROUND AND SAWN TIMBER.

H1.2-ALL WALL FRAMING AND ASSOCIATED MEMBERS
ROOF FRAMING, TRUSSES AND CEILING JOISTS
ENCLOSED FRAMING WITHIN SKILLION / FLAT ROOFS

H3.1-CLADDING CAVITY BATTENS

STUD GRADE
UNLESS SPECIFIED OTHERWISE WALL FRAMING IS GRADED TO SG8 AS PER NZS3604:2011

90x45 STUDS

CLAYTON DRAFTING & DESIGN LTD
PH: 021589219

ONLY COUNCIL STAMPED PLANS TO BE USED FOR CONSTRUCTION.
DO NOT SCALE OFF PLANS.
© COPYRIGHT CLAYTON DRAFTING & DESIGN LTD
0097-BARNES-(BC REV-A)-141019.pln

WDC - Approved Building Consent Document - BC21-608_SP_ISSUED - Pg 51 of 177 - 29/09/2021 - vsingh

KDC - Approved Building Consent Document - BC21-608_SP_ISSUED - Pg 52 of 177 - 29/09/2021 - vsingh

Diag. A

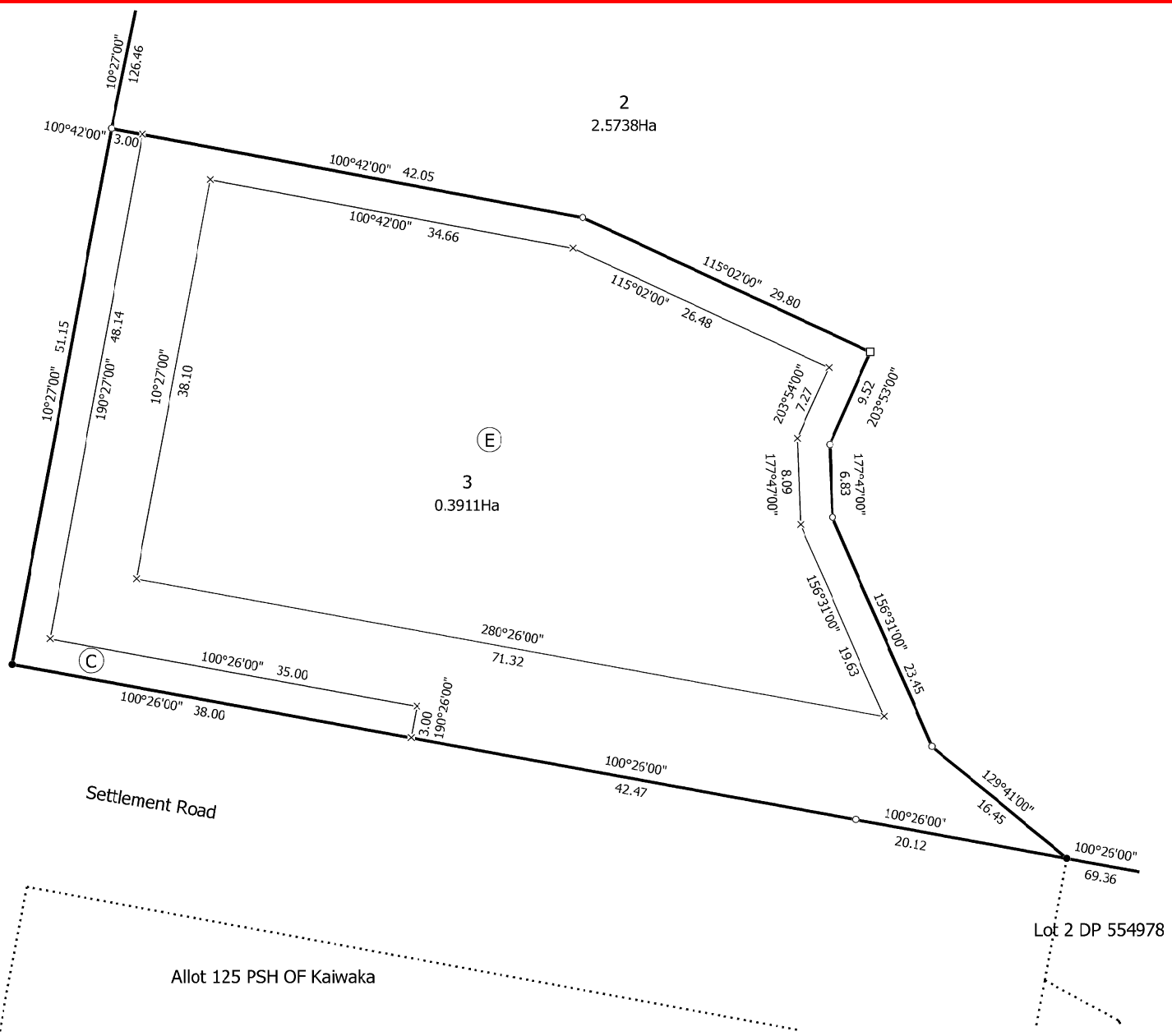

T 2/6

Land District: North Auckland Digitally Generated Plan Generated on: 17/05/2021 10:29am Page 4 of 8	Lots 1 - 3 Being a Subdivision of Allotment 310 Parish of Kaiwaka	Surveyor: Adam Paul Stanley Booth Firm: Pacific Coast Surveys Limited (Mang	Title Plan LT 560279 Approved on: 17/05/2021

KDC - Approved Building Consent Document - BC21-608_SP_ISSUED - Pg 53 of 177 - 29/09/2021 - vsingh

RECORD OF TITLE
UNDER LAND TRANSFER ACT 2017
FREEHOLD

Search Copy

R.W. Muir
Registrar-General
of Land

Identifier	**988296**
Land Registration District	**North Auckland**
Date Issued	23 April 2021

Prior References
NA42B/368

Estate	Fee Simple
Area	3911 square metres more or less
Legal Description	Lot 3 Deposited Plan 560279

Registered Owners
Gina Maree Utting and Dawn Owens

Interests

Subject to Section 59 Land Act 1948
12086992.2 Consent Notice pursuant to Section 221 Resource Management Act 1991 - 23.4.2021 at 11:29 am
12126265.3 Mortgage to ANZ Bank New Zealand Limited - 2.6.2021 at 3:49 pm

KDC - Approved Building Consent Document - BC21-608_SP_ISSUED - Pg 54 of 177 - 29/09/2021 - vsingh

BioCycle Systems Ltd
15 Mexted Place
P O Box 9262
HAMILTON
0800 246 292

Technical Design Specifications - BioCycle 8200 Aerated Treatment Plant

The BioCycle 8200 Aerated Wastewater Treatment System can be used to treat domestic effluent from residential or light commercial properties to a level where it can be safely dispersed on site without any negative effect on the environment.

The modular construction of the BioCycle plant makes it possible to manufacture a system for any flow rate that may be required. It is a cost-effective alternative for areas where ground porosity is at varying ends of the spectrum. On undulating sites where the land at lower levels is consumed by buildings or other facilities the BioCycle system allows effluent to be distributed on a level above the tanks location.

The BioCycle system complies with all specifications for AWTS treatment units in New Zealand providing effective and reliable wastewater treatment over a long period of time. The design parameters have been derived from proven technology in the field of on-site wastewater treatment. This is achieved by application of the specified parameters with excellent design and construction principals, including thorough testing of the system and final effluent.

The Biocycole 8200 system is capable of treating up to 1600Litres per day. The large primary septic chamber allows raw sewage a minimum 24 hours of primary treatment to be achieved enabling a minimum 20% reduction of BOD's through sedimentation before secondary processing is commenced.

Inside The BioCycle 8200 system

Septic Tank:

Raw effluent enters the primary tank (2900L) from the dwelling. The primary tank also receives the return activated sludge from the clarification tank, providing a stimulant for further breakdown of the influent load. The capacity of the primary tank allows 24 hours of residence for effluent ensuring sufficient BOD reduction and anaerobic breakdown has occurred.

Anoxic Chamber:

Filtered effluent enters the anoxic chamber from the primary holding via a 4' Biotube filter. This chamber acts as an additional septic, anaerobic zone which also receives recycled sludge from the clarification chamber to assist the further removal of nitrates.

BioCycle Systems Ltd
15 Mexted Place
P O Box 9262
HAMILTON
0800 246 292

KDC - Approved Building Consent Document - BC21-608_SP_ISSUED - Pg 55 of 177 - 29/09/2021 - vsingh

Aeration Chamber:

Following primary treatment, aeration is provided in a 2800L chamber which contains submerged media. This purpose-built media is attached to the walls of the tank allowing even distribution of air through the chamber and media.

Diffused air at a minimum rate of 100Litres/min is required for adequate oxygenation. Air is blown via a pipe into the Aeration Chamber and released at the bottom by way of purpose made fine air bubble diffuser assemblies.

The aeration system is designed to maintain a minimum dissolved oxygen concentration of 2mg/L in the aerobic chamber within the maximum two hourly flow.

Clarification Chamber:

With a capacity of 1200L, effluent is further polished within the clarification chamber. This chamber is provided to remove settling and floatable solids passing through from the aerobic chamber.

Provision is made for constant automatic return of settled solids to the anoxic chamber by means of a subsurface sludge mechanism operated by venturi suction off the air supply manifold; this is done so that sufficient nitrified waste is recycled back to the oxygen deficient anoxic stage for denitrification to occur.

Pump Out Chamber:

Treated effluent enters the final 300L chamber where it will be pumped out to the irrigation field via a fine 130-micron disc filter to assist further removal of fine particles and ensuring a long-lasting irrigation field.

Tank Construction

In New Zealand, the BioCycle Systems Ltd standard concrete tank is constructed of steel reinforced concrete to a strength of 40Mpa. Tank walls are monolithic. The lid is constructed separately and sealed to the tanks walls to prevent leakage.

Dart Concrete Ltd manufacture the tank in accordance with the structural requirements of AS/NZS 1546.1.2008.

Manhole lids are formed in HDPE and internal components are PVC pressure pipe.

All electrical box housings and electrical control units are made of HDPE, fastened to the tank lid.

Each system is fitted out prior to leaving the factory. Prerequisite drainage, irrigation and electrical connections are completed on the destination building site.

BioCycle Systems Ltd
15 Mexted Place
P O Box 9262
HAMILTON
0800 246 292

KDC - Approved Building Consent Document - BC21-608_SP_ISSUED - Pg 56 of 177 - 29/09/2021 - vsingh

Operating Plant Specifications

Aeration

LP80 HN Air Pump located inside the HDPE enclosure on top of the tank

- 85-watt power rating is single phase
- Exhaust capacity is 100 litres per minute per pump
- Noise level at 1.0m from the tank is approximately 35dB(A)

Irrigation Pump

A Bianco B42A/B (or Davey D42A/B, or similar) submersible pump with a maximum Head of at least 29m is fitted.

Power consumption is subjective and varies with total flow during any day and the type of irrigation system installed.

An estimated cost of power consumption used by the Biocycle blower and irrigation pump is around $150.00 per year, based on around 1.6kWhr/day at 0.25c/kWhr.

Monitoring System

All BioCycle units are installed with two alarms as warning devices. An alarm plate (audible/visual) is supplied to be installed in a convenient position inside the house. The alarm plate is commercial grade, similar to a light switch, with two coloured LED lights. A switch plate provides for the alarm to sound and to be switched to 'mute' when heard.

The alarm panel is incorporated into an electrical circuit breaker, located at the Biocycle system or fuse box, as a safeguard against electrical faults.

The two LED lights indicate:

1. High-Water level, designed to sound if water level in the irrigation chamber reaches a critical level. This indicates that the submersible pump is malfunctioning, or the irrigation filter is blocked.
2. Air pressure fault, designed to sound if the blower ceases to operate or there is an air blockage.

The home occupants are responsible for keeping the irrigation filter clean and ensuring the irrigation drip lines and flush valves are not obstructed or broken.

BioCycle Systems Ltd
15 Mexted Place
P O Box 9262
HAMILTON
0800 246 292

KDC - Approved Building Consent Document - BC21-608_SP_ISSUED - Pg 57 of 177 - 29/09/2021 - vsingh

Final Effluent Quality

A properly maintained system produces treated water of a very high quality.

Testing of the BioCycle 8200 at the OSET facility in Rotorua has reported the following:

AS/NZS 1547:2012 Secondary Effluent Quality Requirements

These requirements are that 90% of all test samples must achieve a BOD_5 of ≤ 20 g/m^3 and TSS of ≤ 30 g/m^3 with no one result for BOD_5 being >30 g/m^3 and no one result for TSS being >45 g/m^3.

The **BioCycle 8200 system achieved** a performance level of **100%** for BOD_5 and **100%** for TSS based on the full set of 37 test results in weeks 9 to 35, with no results exceeding the maximums. The **BioCycle 8200 system** thus **meets** the secondary effluent quality requirements of **AS/NZS 1547:2012** at the test flow rate of 1,000 L/day (ie at 70% of the plants advised design capacity).

Benchmark Ratings

The **BioCycle 8200 system achieved** the following effluent quality ratings for the sixteen benchmarking results in weeks 20 to 35.

Indicator Parameters	Median	Std Dev	Rating	Rating System				
				A+	*A*	*B*	*C*	*D*
BOD (mg/L)	*4.5*	*1.4*	A+	*<5*	*<10*	*<20*	*<30*	*≥30*
TSS (mg/L)	*7.7*	*3.6*	A	*<5*	*<10*	*<20*	*<30*	*≥30*
Total Nitrogen (mg/L)	*22.1*	*2.4*	B	*<5*	*<15*	*<25*	*<30*	*≥30*
NH_4- Nitrogen (mg/L)	*0.2*	*0.1*	A+	*<1*	*<5*	*<10*	*<20*	*≥20*
Total phosphorus (mg/L)	*4.4*	*0.3*	B	*<1*	*<2*	*<5*	*<7*	*≥7*
Faecal Coliforms (cfu/100mL)	*54,000*	*23,660*	C	*<10*	*<200*	*<10,000*	*<100,000*	*≥100,000*
Energy (kWh/d) (mean)	*6.3*	*1.9*	D	*0*	*<1*	*<2*	*<5*	*≥5*

Ongoing testing on the BioCycle 8200 allows for continuous improvement to exceed final effluent quality expectations.

BioCycle Guarantee / Warranty

Each BioCycle system is covered by a limited warranty of 10 years on the concrete tank, and two years (24 months from date of installation) on all electrical components within the system.

Within the warranty periods stated above, BioCycle Systems Ltd guarantees to repair or replace any part of the system requiring remedy due to defective manufacture, provided BioCycle is given notice of the problem within 24 hours of the customer being aware of the problem.

BioCycle Systems Ltd
15 Mexted Place
P O Box 9262
HAMILTON
0800 246 292

KDC - Approved Building Consent Document - BC21-608_SP_ISSUED - Pg 58 of 177 - 29/09/2021 - vsingh

Essential rules for the care of your wastewater system.

All wastewater (toilets, bathrooms, laundry) produced on a rural property is discharged via pipes to an on-site wastewater treatment and land disposal system. The wastewater treatment system is a fragile biological (bacterial) process and therefore requires care by all residents and visitors.

You can help maintain an effective wastewater treatment system on your site by ensuring **no toxic chemicals** are put down sinks or toilets and by using only environmentally friendly cleaning products. Toxic chemicals, drugs (e.g. antibiotics) kill bacteria in the treatment system. These organisms are needed to treat wastewater and if healthy populations are not maintained, the system will fail resulting in poorly treated wastewater discharging into the soil, offensive odour and increased maintenance costs. You should also manage your water use to protect the system from overloading.

DO

- Try to take short showers in preference to baths.
- Use bio-degradable soaps and cleaners.
- Check all your cleaning products to see if they are suitable for septic tanks.
- Use natural soaps (rather than chemicals) for cleaning.
- Scrape all plates and dishes to compost/rubbish, removing as much food/fat as possible.
- Repair/fix all leaking taps as soon as possible.
- Use phosphate free or low phosphorus laundry detergents.

DO NOT

- Do Not pour any toxic/strong chemicals (paint, oil, grease, thinners, pesticides down any drains).
- **Do Not flush any products other than standard toilet paper** down the toilet! This means no tampons, pads, condoms, cigarette butts or 'wet-wipes'.
- Do Not discard any drugs down the toilet or sink.
- Do Not use strong cleaners (bleach, Canesten, Napisan, strong citrus or alcohol base).
- Do Not tip chlorine, anti-**septic,** anti-**bacterial**, or disinfectant type products down drain.
- Do Not use chemical drain cleaning products to clear a blockage – call a plumber.
- Do Not do all your laundry in one day – spread your loads through the week.
- Do Not install sink garbage grinders. If a grinder exists, don't discharge high volumes of scraps, especially carbohydrates, bones or fats & oils into it.
- Do Not put coffee grinds down the sink drain.

On-site Effluent Treatment National Testing Programme (OSET NTP)

PERFORMANCE CERTIFICATE
BioCycle 8200 On-site Domestic Wastewater Treatment System,
OSET NTP Trial 11, 2015/2016

System Tested

The **BioCycle 8200 system** is a Submerged Aerated Filter Wastewater Treatment Plant using Kompakt 2 tubular submerged fixed growth filter system [298 m^2 (2.16 m^3)]. The manufacturers rated design capacity is 1,400 litres/day. Total operational liquid volume is 7,800 litres (Primary Chamber 2,900 litres; Anoxic chamber 600 litres; Aeration Chamber 2,800 litres; Clarification Chamber 1,200 litres; Pump Chamber 300 litres; Emergency storage 1,600 litres). No tertiary treatment (such as UV disinfection) is incorporated. It comprises a single 5 chamber concrete tank. The air blower is Thomas LP-80, 0.08kW, running continuously and operating a continuous venturi airlift recirculation pump at 40 lph. There is a 100mm Biotube effluent filter in the Primary Chamber and an Azud 130 micron final effluent filter. The discharge pump was a Davey D42A/B 0.90kW. The manufacturers stated service frequency is 6 monthly.

Test Flow Rate

The **BioCycle 8200 system** was tested at 1,000 litres/day (equivalent to servicing a 3-bedroom 5 to 6 person household) over an 8 month (35 week) period November 2015 to July 2016 followed by a 1 month (4 week) high load effects test involving 3 days at 1,500 litres/day followed by 2 days at 2,000 litres/day then 1,000 litres/day over the following 2 weeks.

Testing and Evaluation Procedures

A total of 37 treated effluent samples of organic matter (BOD_5) and suspended solids (TSS) at generally six day intervals during weeks 9 to 35 were tested and evaluated against the secondary effluent quality requirements of the joint Australia/NZ standard AS/NZS 1547:2012.
A total of 16 treated effluent samples of organic matter (BOD_5), total suspended solids (TSS), total nitrogen (TN), ammonia nitrogen (NH_4-N), total phosphorus (TP) and faecal coliforms (FC) at generally six day intervals during weeks 23 through 35 were tested and the results benchmarked and rated on their median values. In addition, the energy used by the treatment system was assessed on the mean of consumption levels over the 16 sample days.

General Performance

The BioCycle 8200 plant had a number of major issues throughout the testing period requiring frequent operator attendance including: correction to wiring of the discharge pump, repair of a significant air leak, repair of a significant water leak and attendance to clean a clogged effluent filter on a number of occasions. **This number of structural and operational errors is considered by the Audit Group to be unsatisfactory**.

AS/NZS 1547:2012 Secondary Effluent Quality Requirements

These requirements are that 90% of all test samples must achieve a BOD_5 of $\leq$ 20 g/m^3 and TSS of $\leq$ 30 g/m^3 with no one result for BOD_5 being >30 g/m^3 and no one result for TSS being >45 g/m^3. The **BioCycle 8200 system achieved** a performance level of **100%** for BOD_5 and **100%** for TSS based on the full set of 37 test results in weeks 9 to 35, with no results exceeding the maximums. The **BioCycle 8200 system** thus **meets** the secondary effluent quality requirements of AS/NZS 1547:2012 at the test flow rate of 1,000 L/day (ie at 70% of the plants advised design capacity).

Benchmark Ratings

The **BioCycle 8200 system achieved** the following effluent quality ratings for the sixteen benchmarking results in weeks 20 to 35.

Indicator Parameters	Median	Std Dev	Rating	Rating System				
				A+	*A*	*B*	*C*	*D*
BOD (mg/L)	*4.5*	*1.4*	A+	*<5*	*<10*	*<20*	*<30*	*≥30*
TSS (mg/L)	*7.7*	*3.6*	A	*<5*	*<10*	*<20*	*<30*	*≥30*
Total Nitrogen (mg/L)	*22.1*	*2.4*	B	*<5*	*<15*	*<25*	*<30*	*≥30*
NH_4- Nitrogen (mg/L)	*0.2*	*0.1*	A+	*<1*	*<5*	*<10*	*<20*	*≥20*
Total phosphorus (mg/L)	*4.4*	*0.3*	B	*<1*	*<2*	*<5*	*<7*	*≥7*
Faecal Coliforms (cfu/100mL)	*54,000*	*23,660*	C	*<10*	*<200*	*<10,000*	*<100,000*	*≥100,000*
Energy (kWh/d) (mean)	*6.3*	*1.9*	D	*0*	*<1*	*<2*	*<5*	*≥5*

On-site Effluent Treatment National Testing Programme,
c/- Technical Manager 10 Tide Close, Mount Wellington, AUCKLAND 2013
Mob: 021 626 772 E-mail: ray@hedgland.co.nz

KDC - Approved Building Consent Document - BC21-608_SP_ISSUED - Pg 59 of 177 - 29/09/2021 - vsingh

On-site Effluent Treatment National Testing Programme (OSET NTP)

This Performance Certificate is specific to the **BioCycle 8200** model as specified above when operated at a flow rate of 1,000 litres/day (70% of advised plants design capacity), and is valid for 5 years from the date below. For the full OSET NTP report on the performance of the **BioCycle 8200 system** contact Murray White of **BioCycle Systems**, Hamilton, P: 0800 246 292, or M: 0274 998 799 or E: murray@biocyclesystems.co.nz.

Authorised By:



Ray Hedgland, Technical Manager, OSET NTP
1 February 2017

KDC - Approved Building Consent Document - BC21-608_SP_ISSUED - Pg 60 of 177 - 29/09/2021 - vsingh

On-site Effluent Treatment National Testing Programme,
c/- Technical Manager 10 Tide Close, Mount Wellington, AUCKLAND 2013
Mob: 021 626 772 E-mail: ray@hedgland.co.nz

SUBMERSIBLE DRAINAGE PUMPS
Model Numbers: D42A, D42M, D42A/B

DEPEND ON DAVEY

WATER PRODUCTS

KDC - Approved Building Consent Document - BC21-608_SP_ISSUED - Pg 61 of 177 - 29/09/2021 - vsingh



D42A, D42M D42A/B

SUMP PUMPS

PRODUCT DESCRIPTION

Submersible sump pump with twin impeller design for higher pressure, up to 32m head

APPLICATIONS

- Lawn & garden irrigation
- Sump emptying to higher heads
- Treated effluent disposal
- Water transfer from wells
- Model D42A/B specially designed for non potable rainwater applications

"A" suffix models equipped with present length automatic float switch fitted for automatic operation.

FEATURES & BENEFITS

Double mechanical seal, one in oil bath on motor and extra mechanical seal on pump
- Superior reliability
- Long service life

Corrosion resistant 304 stainless steel shaft, motor shell and fasteners
- Long service life

D42A/B has cast 316 stainless steel motor caps and super tough engineered thermo plastic pump casing
- Outstanding corrosion resistance
- Long life

Centrifugal multistage twin impeller design
- Higher pressures & increased efficiency

Closed vane impellers with long engagement "D" drives
- Positive operation
- Long service life

D42A & D42M have labyrinth impeller neck rings
- Maintain pump performance
- Less susceptible to wear

D42A/B has patented independently floating neck rings
- Outstanding pump performance
- Long pump life

Corrosion resistant hard wearing polycarbonate impellers
- Long service life

Corrosion resistant stainless steel fine mesh suction strainer with large surface area
- Prevents blockages of the pump by solids

In-built automatic thermal overload
- Protects the motor in the event of blockage or voltage supply problems

HO7RNF oil resistant leads, 10 metres long with 3 pin power plug
- Easy to connect to power supply
- Longer life in dirty water

OPERATING LIMITS

	D42A,M	D42A/B
Capacities to	110lpm	130lpm
Max. total head	26m	32m
Max. submergence	12m	
Max. pumped water temperature	40°C	
Max. soft solids	1.9mm O.D.	
Outlet size (BSP)	1" F	

Suitable Fluids
Clean water of neutral pH containing up to 1% small solids. Some wear should be expected while pumping hard solids in suspension.

H/O & MFG SCORESBY Quality System
Quality Endorsed Company
ISO 9001 Lic 10636 Standards Australia

TECHNICAL SPECIFICATIONS

MATERIALS OF CONSTRUCTION

PART	MATERIAL
Impeller	Glass filled polycarbonate
Lock nut	304 stainless steel
Pump casing	Cast iron - FC200 (D42A&M) Glass filled polycarbonate (D42A/B)
Diffuser and blanking ring	Glass filled noryl
Mechanical seal - pump	Carbon/ceramic
Mechanical seal - motor	Silicon carbide/ceramic in oil bath
Shaft seal elastomer	Nitrile rubber
Pump shaft	304 stainless steel
O-rings	Nitrile rubber
Motor shell	304 stainless steel
Bottom bearing housing	Cast iron - FC200 (D42A&M) Cast 316 stainless steel (D42A/B)
Upper motor cover	Cast iron - FC200 (D42A&M) Cast 316 stainless steel (D42A/B)
Handle	304 stainless steel
Fasteners	304 stainless steel
Float & power supply leads	HO7RN-F oil resistant

ELECTRICAL DATA

Supply voltage	220-240V
Supply frequency	50Hz single phase
Speed	2 pole, 2850rpm
Full load current	4.0A
Locked rotor current	14A
Input power (P_1)	0.94kW
Output power (P_2)	0.60kW
IP rating	X8
Insulation class	Class F
Starting	P.S.C.
Lead	10m long

INSTALLATION & PRIMING

Use a rope to position and retrieve the pump. Do not lower or retrieve the pump using the power lead as this may damage the cable entry seals, causing water leaks and unsafe operation.
Don't use this product for recirculating or filtering swimming pools, spas, etc. While these pumps are built to high safety standards, they are not approved for installations where people will be in the water while they are operating.
Don't pump abrasive materials. Sand and grit in the water being pumped will accelerate wear, causing shortened pump life.
Keep your pump clean, particularly in situations where lint, hair or fibrous materials may get bound around the pump shaft. Regular inspection and cleaning will extend pump life.
Make room for the float switch to operate. Automatic models have a float switch to turn them on when the water level rises and turn them off again when it has been pumped down to the safe operating level of the pump. If the float switch is not free to rise and fall, correct pump operation may not be possible.
Don't run your pump dry. Non-automatic models must be switched off manually or by way of an external float/level switch when the water level is reduced to the top of the pump housing.

HYDRAULIC PERFORMANCE

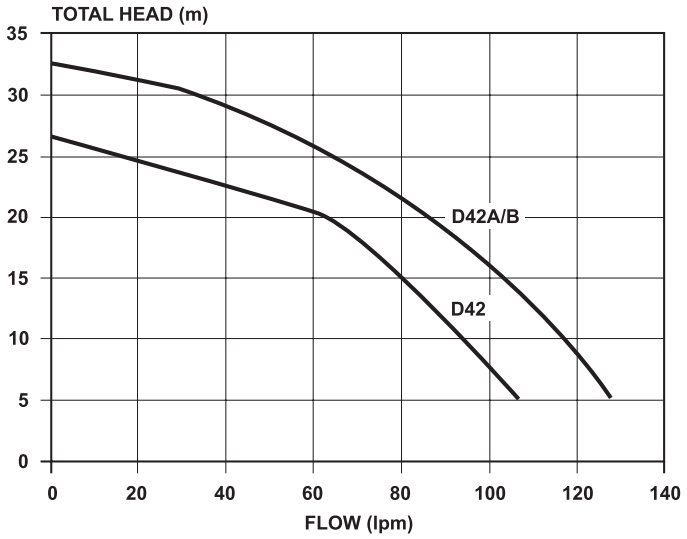

DIMENSIONS

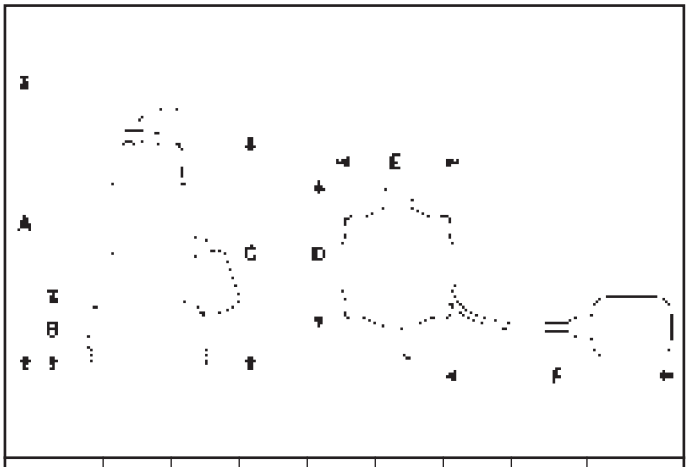

Model	A	B	C	D	E	F	Outlet B.S.P.	Net Weight (kg)
D42A	475	130	370	235	195	330	1"F	20
D42M	475	130	370	235	195	330	1"F	19.5
D42A/B	475	130	370	235	195	330	1"F	18.5

All dimensions in mm unless otherwise stated.

This literature is not a complete guide to product usage. Further information is available from your Davey dealer, Davey Customer Service Centre and on the relevant product Installation and Operating Instructions. This data sheet must be read in conjunction with the relevant product Installation and Operating Instructions and all applicable statutory requirements. Product specifications may change without notice.
® Davey is a registered trademark of Davey Products Pty Ltd. © Davey Products Pty Ltd 2001.

Visit Davey on-line for further information
www.davey.com.au

KDC - Approved Building Consent Document - BC21-608 - SP - ISSUED - Pg 62 of 177 - 29/09/2021 - vsingh

DEPEND ON
DAVEY
WATER PRODUCTS

Davey Products Pty Ltd
Member of the GUD Holdings Ltd Group
ABN 18 066 327 517
Head Office and Manufacturing
6 Lakeview Drive,
Scoresby, Australia 3179
Ph: +61 3 9730 9222
Fax: +61 3 9753 4100
Website: www.davey.com.au
Customer Service Centre
Ph: 1300 367 866
Fax: 1300 369 119
E-mail: sales@davey.com.au
Interstate Offices
Sydney - Brisbane - Adelaide
Perth - Townsville

International
6 Lakeview Drive,
Scoresby, Australia 3179
Ph: +61 3 9730 9121
Fax: +61 3 9753 4248
E-mail: export@davey.com.au

Germany
Kantstrasse 47,
04275 Leipzig
Ph: +49 341 301 0412
Fax: +49 341 301 0413
E-mail: akrenz@daveyeurope.com

New Zealand
2 Rothwell Avenue,
North Harbour, Auckland 1330
Ph: +64 9 914 3680
Fax: +64 9 914 3685
E-mail: sales@daveynz.co.nz

USA - Davey Pumps Inc.
1005 N. Commons Drive
Aurora, Illinois 60504
Ph: +1 630 898 6976
Fax: +1 630 851 7744
Website: www.daveyusa.com
E-mail: sales@daveyusa.com

DPM128-3a/0806/WEB supersedes DPM128-3/3K/0706/SC

WILEY GEOTECHNICAL LTD

BOREHOLE No. 1

SITE: Lot 3, 760 Settlement Road, Hakaru (Effluent Field)

REF: 21150

Sheet 1 of 1

REDUCED LEVEL (RL)	INFERRED GEOLOGY	DESCRIPTION OF SOIL	SOIL SYMBOL	DEPTH (m)	SAMPLE TYPE	WATER CONTENT (%)	WATER LEVEL	CORRECTED VANE SHEAR STRENGTH (kPa) ● Peak Field Vane ○ Remoulded Field vane 50 100 150	SCALA PENETROMETER BLOWS / 100 mm 5 10 15
		FILL/TOPSOIL dark brown							
	Alluvium of the Tauranga Group	SILT slightly clayey, slightly plastic, brown increase clay and plasticity		1 2 3 4 5					
		E.O.H: 1.2m							

NOTES Groundwater was not encountered.

LOGGED BY: CS

DATE DRILLED: 9-Jun-21

DRILL METHOD 50 mm Hand Auger

KDC - Approved Building Consent Document - BC21-608_SP_ISSUED - Pg 63 of 177 - 29/09/2021 - vsingh

KDC - Approved Building Consent Document - BC21-608_SP_ISSUED - Pg 64 of 177 - 29/09/2021 - vsingh



WILTON JOUBERT
Consulting Engineers

PROJECT

Flood Assessment

Address

ALLOTMENT 310 PSH OF KAIWAKA
760 Settlement Road
KAIWAKA

DATE
26th June 2020

JOB REFERENCE
#97465

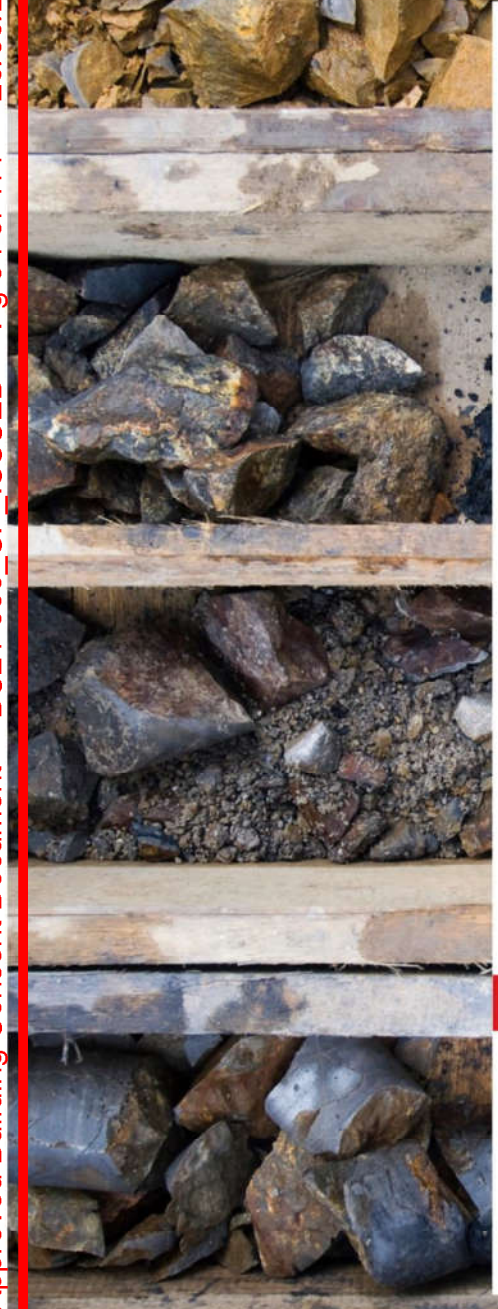

WWW.WILTONJOUBERT.CO.NZ . STRUCTURAL . GEOTECH . STORMWATER . WASTEWATER

NORTHLAND
PO Box 8130
Kensington
Whangarei
0145
T 09 945 4188

AUCKLAND WAIKATO
PO Box 11-381
Ellerslie
Auckland
1542
T 09 527 0196

CANTERBURY
T 021 824 063

SOUTHERN LAKES
PO Box 169
Wanaka
9343
T 03 443 6209



KDC - Approved Building Consent Document - BC21-608_SP_ISSUED - Pg 65 of 177 - 29/09/2021 - vsingh

QUALITY CONTROL

Revision History

Revision No.	Prepared By	Description	Date
01	Ben Steenkamp	Resource Consent Stage	26.06.2020

Acceptance

Action	Name	Signed	Date
Prepared by	Ben Steenkamp		26.06.2020
Reviewed by	Frans Krause		26.06.2020
Approved by	Frans Krause	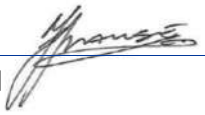	26.06.2020
on behalf, of	**Wilton Joubert Limited**		

This document is copyright protected

KDC - Approved Building Consent Document - BC21-608_SP_ISSUED - Pg 66 of 177 - 29/09/2021 - vsingh

Contents

1. **INTRODUCTION** 3

2. **SITE DESCRIPTION** 3

3. **CATCHMENTS** 5

4. **METHODOLOGY** 5

5. **ANALYSIS** 6

6. **DISCUSSION** 7

7. **CONCLUSION AND RECOMMENDATIONS** 8

8. **LIMITATIONS** 9

KDC - Approved Building Consent Document - BC21-608_SP_ISSUED - Pg 67 of 177 - 29/09/2021 - vsingh

1. INTRODUCTION

Wilton Joubert Ltd (WJL) was engaged to carry out a flood assessment at 760 Settlement Road, Kaiwaka. The purpose of this investigation is to provide a "desktop" analysis of the potential flood risks associated with the proposed development, which is to be considered through a consent application to the Kaipara District Council.

The information provided herein relates to data abstracted from the LINZ database, Site Plan sketches supplied by the client, Kaipara District Plan - Operative in part, Kaipara District Council Standards, and relevant Codes of Practice as well as the New Zealand Building Code E1/VM1.

2. SITE DESCRIPTION

The property is legally described as ALLOTMENT 310 KAIWAKA PSH BLK XV WAIPU SD and is located on the southern side of Kaiwaka-Mangawhai Road, Kaiwaka. Access to the property is via a single private accessway crossing off Settlement Road. The property is 4.2567 ha in extent and is assessed as having a relatively flat surface, which generally descends towards the east.

GIS data suggests that the Hakaru River is located along the eastern boundary with some wetlands and overland flow paths located migrating through the centre of the land parcel.

Figure 1: *Locality Map – 760 Settlement Road (KDC - Geomaps)*

KDC - Approved Building Consent Document - BC21-608_SP_ISSUED - Pg 68 of 177 - 29/09/2021 - vsingh

The flood susceptibility map obtained from the Kaipara District Council GIS system, shows the site to be located within a flood susceptibility area of a flood plain generated by the Hakaru River.

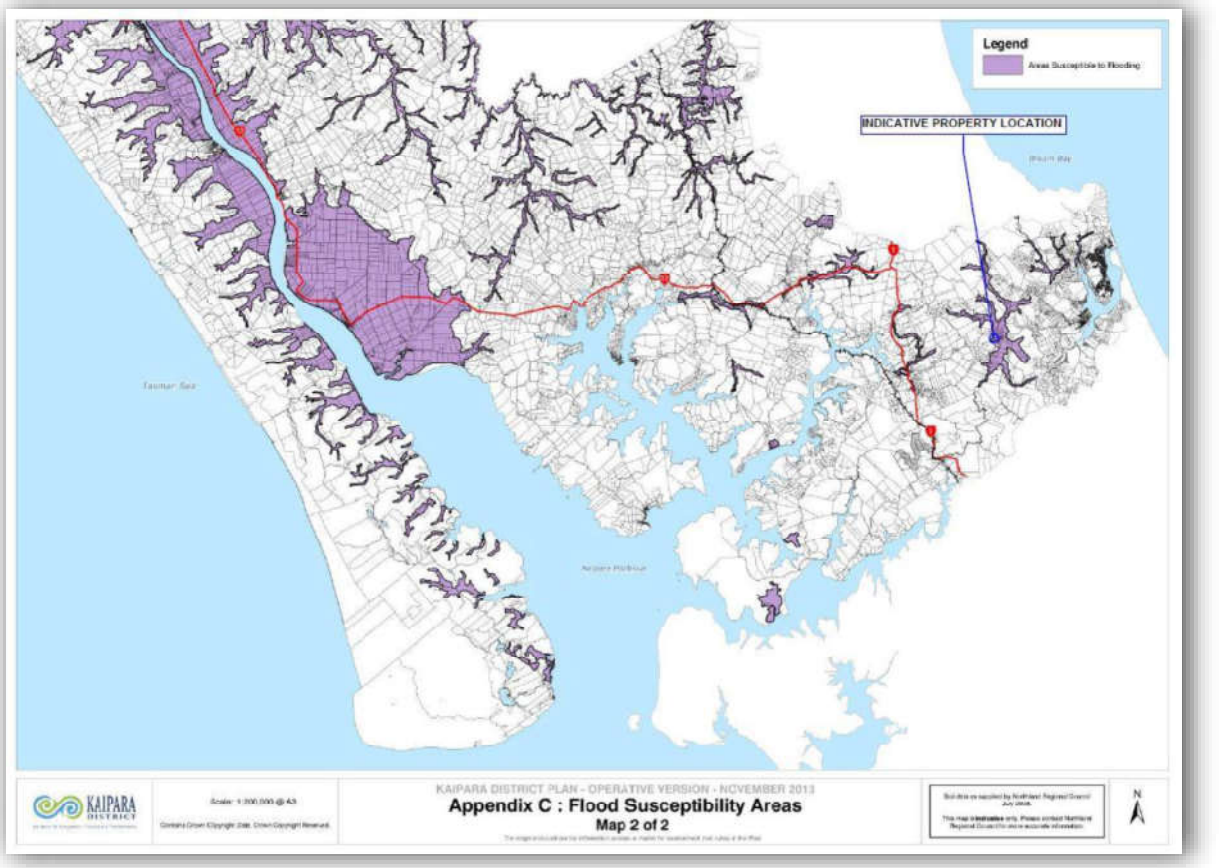

Figure 2: *Kaipara - Flood Susceptibility Map*

KDC - Approved Building Consent Document - BC21-608_SP_ISSUED - Pg 69 of 177 - 29/09/2021 - vsingh

3. CATCHMENTS

The total catchment area is 3664.0937 hectares, as depicted in figure 3, below.

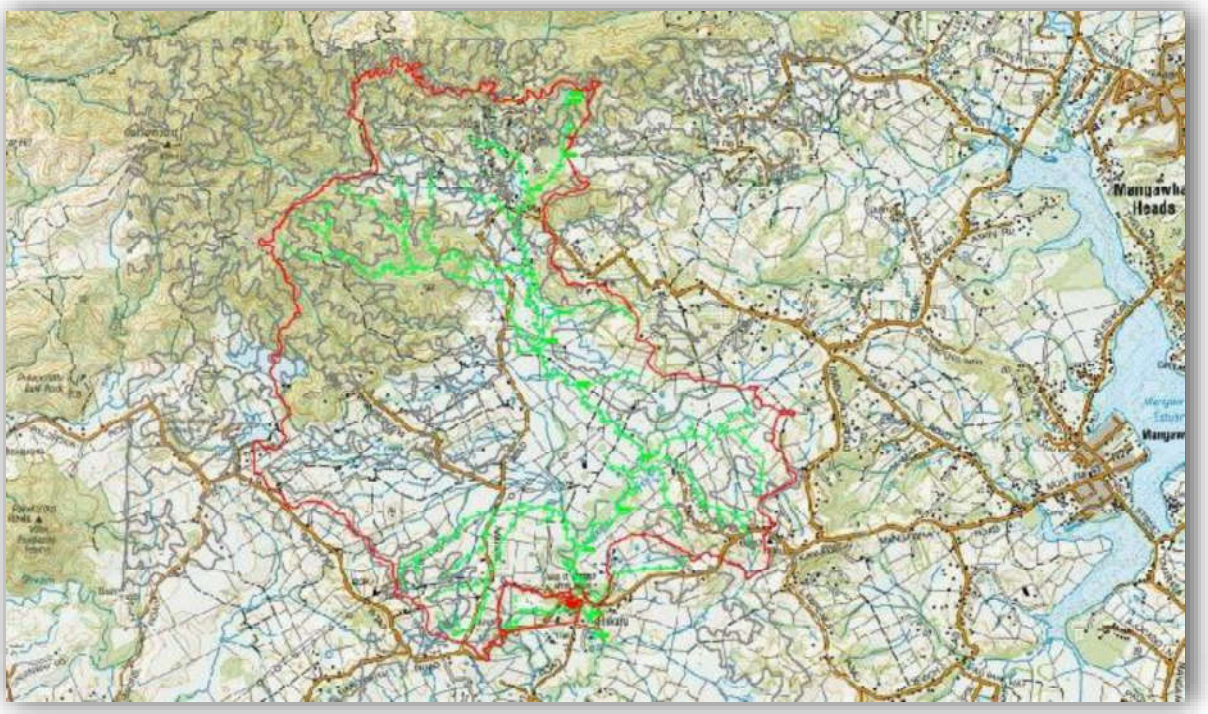

Figure 3: *Catchment*

All the contributing tributaries converge in close proximity of the south eastern corner of the site from where it continues in an southern direction as the Hakaru River discharging into the Kaipara Harbour.

4. METHODOLOGY

A terrain model was constructed of the complete catchment, using the terrain data abstracted from the LINZ Topographical Basemap and the site survey provided by the client. Run-off from all contributing catchments was calculated through the use of HydroCAD software, the results of which are presented in the appendices of this report.

An HEC-RAS model represented through the Autodesk “River” module, was prepared for all main tributaries and populated with the flow data abstracted at various flow change positions identified through the interrogation of the flood model.

KDC - Approved Building Consent Document - BC21-608_SP_ISSUED - Pg 70 of 177 - 29/09/2021 - vsingh

The flood model was calibrated by comparing and adjusting the channel cross-sections and grades with those obtained through the terrain model.

5. ANALYSIS

A summary of the input values used in the analysis is presented in Table 1 below.

Table 1: *HydroCAD Values*

Catchment	Area [ha]	Rainfall depth 20%AEP [inc CC]	Rainfall depth 1%AEP [inc CC]	Tc (min)	Channel Length (m)	20%AEP Flows m^3/s	1%AEP Flows m^3/s
1	3654.1286	173 mm	324 mm	147	12 009	220.10	507.25
2	57.1094	173 mm	324 mm	28	1 414	8.33	19.06
3	4.2567	173 mm	324 mm	10	150	1.00	2.11

The above flows were analysed in the flood model to determine the effect on the subject property. The results of which were depicted graphically in the terrain model.

The Kaipara District Council Engineering Standards lists the following minimum requirements for the development of sites affected by flooding:

"*6.1.1 Minimum Requirements*

(ii) Recognise and protect existing overland flow paths, ephemeral watercourses and natural wetlands, streams and rivers;
(iii) Protect buildings from flooding in accordance with clause 6.2.3 and 6.2.4" where 6.2.3 is applicable:

"6.2.3 Freeboard
The following requirements shall be met:
(a) The minimum freeboard height to floor level above the 100 year ARI flood level shall be as follows.

Table 6.3: Freeboard

Building	*Minimum Freeboard*
Habitable Building floors	*500mm*
Commercial and Industrial Buildings and nonhabitable buildings such as garages and sheds	*300mm"*

KDC - Approved Building Consent Document - BC21-608_SP_ISSUED - Pg 71 of 177 - 29/09/2021 - vsingh

It is further noted in section 6.1.2 (B) that "*in areas zoned Rural, all overland flow paths on lots of less than 4.0ha shall be identified and protected by an easement in gross in favour of Council.*"

6. DISCUSSION

As mentioned elsewhere in this report, a terrain model was constructed utilising the GIS data abstracted from the Kaipara District Council GIS system, LINZ data as well as survey data received from the client. The proposed subdivision lines were superimposed on the terrain model.

Two main tributaries were identified and modelled. The main tributary is the Hakaru River, and the second is the tributary crossing the site from west to east, merging into the Hakaru River to the east. The Kaiwaka-Mangawhai Road crosses the Hakaru River via a bridge, which was also incorporated into the model.

Cross-sections were generated to assist in the creation of the river stations and identifiable cross-sections for utilisation in the flood model.

Both the 1% (Secondary) and 20% (Primary) AEP-storms were analysed for each of the tributaries. The output of each scenario is included in the Appendices to this report. Further analysis of water levels achieved during the 1% AEP and the 20% AEP, revealed water levels of ***34.471MSL*** for the 1% AEP and ***33.119MSL*** for the 20% AEP respectively in the upper portion of the site and ***34.407MSL*** for the 1% AEP and ***33.071MSL*** for the 20% AEP respectively for the lower section.

The flood model indicates that the water will build-up from the position where the two tributaries merge, upstream to the subject site, during a 1% AEP event. The data also concludes that the water level may build-up at the Kaiwaka-Mangawhai Bridge during the same storm event.

Please consult *Figure 4* below for further clarification.

KDC - Approved Building Consent Document - BC21-608_SP_ISSUED - Pg 72 of 177 - 29/09/2021 - vsingh

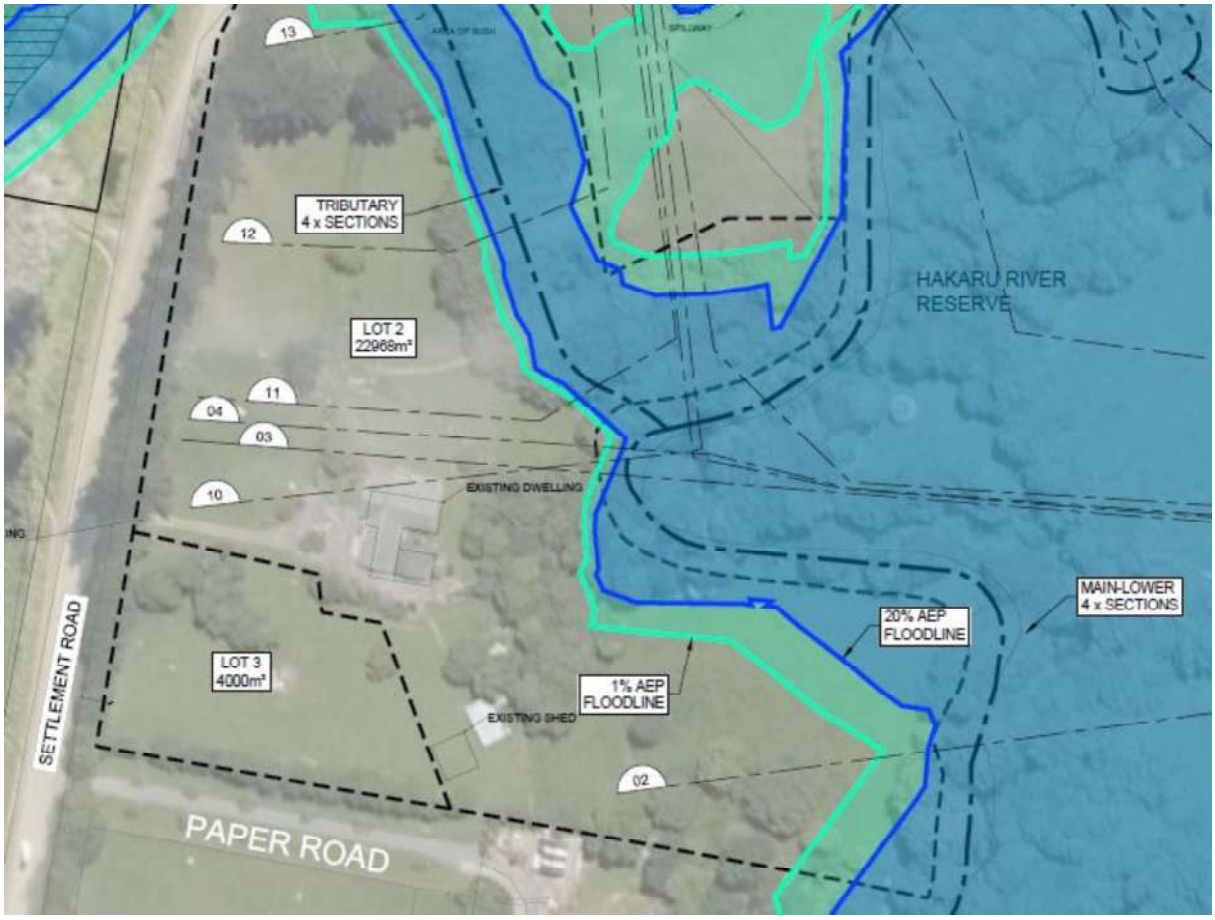

Figure 4: *Indicative Flood Lines*

7. CONCLUSION AND RECOMMENDATIONS

In accordance with the Kaipara District Council's Code of Practice, Table 6.3, Freeboard requirements, for the 1% AEP storm event, the following apply:

- 500mm for Habitable Building Floors
- 300mm for Commercial and Industrial Buildings and non-habitable buildings such as garages and sheds

WJL will, therefore, recommend that the minimum proposed floor levels to be in compliance with the above freeboard requirements. With the above in mind, it is anticipated that the following minimum finished floor levels will be required:

KDC - Approved Building Consent Document - BC21-608_SP_ISSUED - Pg 73 of 177 - 29/09/2021 - vsingh

Building	Minimum Level – Upper part of site	Minimum Level – Lower part of site
Habitable Building floors	**34.971**	**34.907**
Commercial and Industrial Buildings and non-habitable buildings such as garages and sheds	**34.771**	**34.707**

8. LIMITATIONS

The recommendations and opinions contained in this report are based on information from GIS data obtained from the Kaipara District Council database, Northland Geomaps, as well as data obtained from the Client.

This report has been prepared solely for the use of our Client with respect to both the particular brief and specific purpose provided to Wilton Joubert Ltd (WJL), with regards to the specific project described herein.

Both no liability and any duty of care is acknowledged or accepted for the use of any part of this report in any other context or for any other purpose, or by any other person, other party or entity.

The performance behaviour outlined by this report is dependent on the construction activity and actions of the builder/contractor. Inappropriate actions during the construction phase may cause behaviour outside the limits given in this report.

This report has been prepared for the particular project described to us, and no responsibility is accepted for the use of any part of this report in any other context or for any other purpose.

Yours faithfully,

Wilton Joubert Ltd.



Frans Krause
IntPE CPEng APEC RPEQ NZIMS
BEng Civil TechHDipEng PGDip Bus

KDC - Approved Building Consent Document - BC21-608_SP_ISSUED - Pg 74 of 177 - 29/09/2021 - vsingh

APPENDICES

1. Calculations
2. Output data

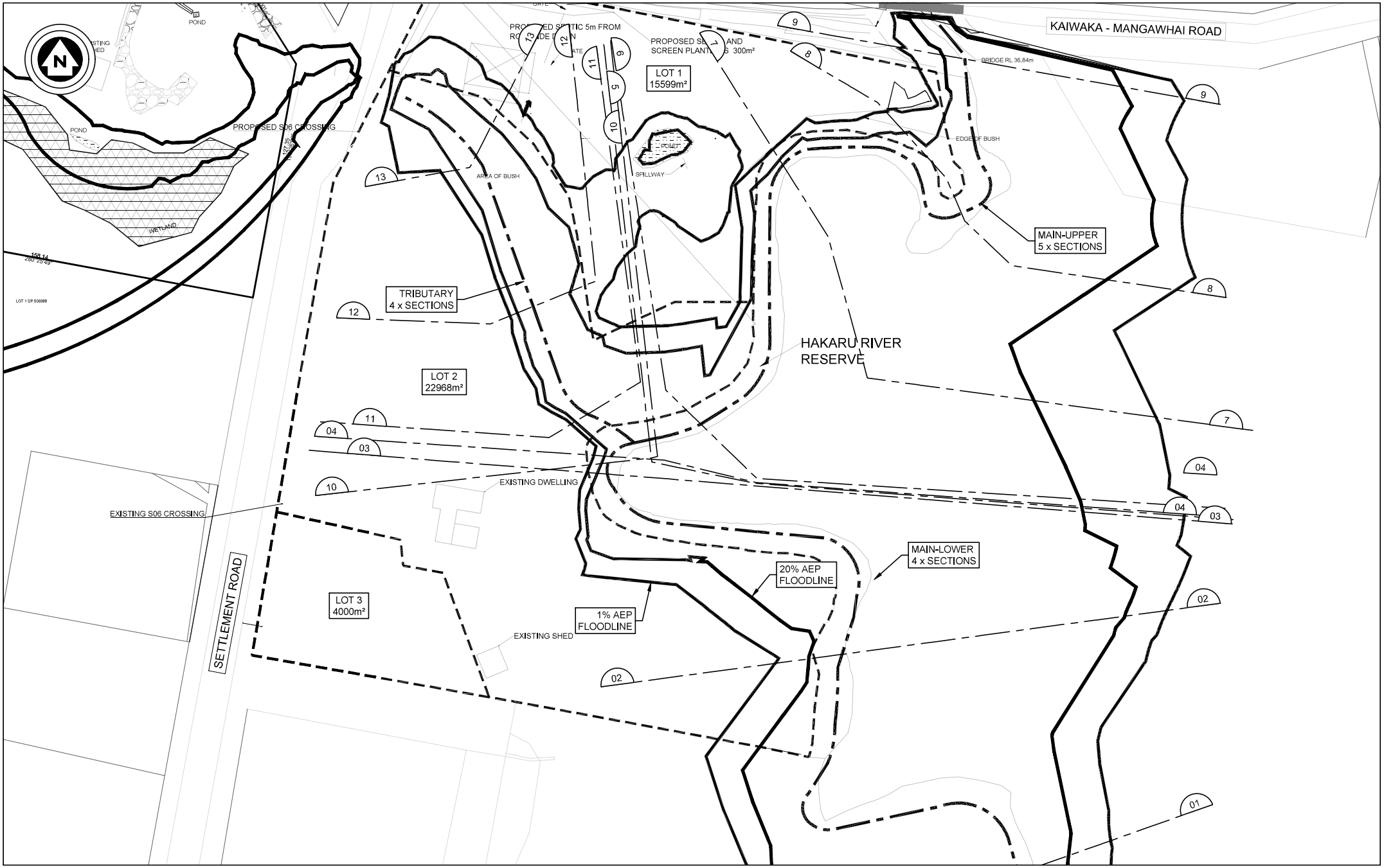

WILTON JOUBERT
Consulting Engineers

NOTES/KEY:

No.	Date	By	Issue/Revision
B	JUL 2021	RDS	BOUNDARIES REVISED AS PER CLIENT'S REQUEST
A	JUN 2021	RDS	FLOOD ASSESSMENT REPORT

DRAWN:	RDS
CHECKED:	FJK
DESIGNED:	BGS
SURVEYED:	OTHER
OFFICE:	OREWA CIVIL
CONTACT:	09 527 0106

PROPOSED LOT 2 ON ALLOT 310 PSH OF KAIWAKA SETTLEMENT ROAD MANGAWHAI

FLOOD ASSESSMENT REPORT

ORIGINAL DWG. SIZE A3
SCALE: 1:1250
DRAWING No. 97465-C001
SHEET No. 01
ISSUE B

COPYRIGHT - WILTON JOUBERT LTD

KDC - Approved Building Consent Document - BC21 608 SP ISSUED - Pg 75 of 177 - 29/09/2021 - 2:56pm

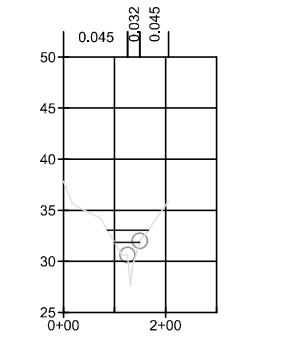

1

Profile: 100yr
Flow Discharge = 528.00 cms
Computed Water Surface = 33.05 m

Profile: 5yr
Flow Discharge = 230.00 cms
Computed Water Surface = 31.87 m

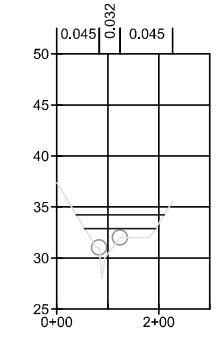

2

Profile: 100yr
Flow Discharge = 528.00 cms
Computed Water Surface = 34.24 m

Profile: 5yr
Flow Discharge = 230.00 cms
Computed Water Surface = 32.89 m

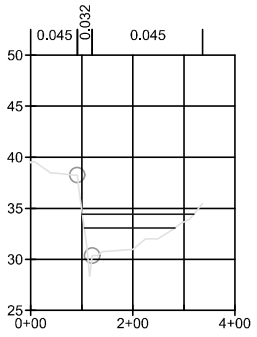

3

Profile: 100yr
Flow Discharge = 528.00 cms
Computed Water Surface = 34.41 m

Profile: 5yr
Flow Discharge = 230.00 cms
Computed Water Surface = 33.07 m

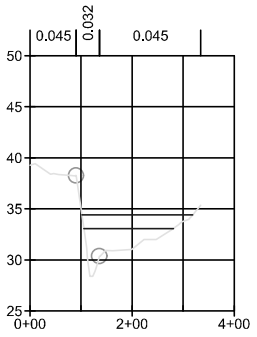

4

Profile: 100yr
Flow Discharge = 528.00 cms
Computed Water Surface = 34.40 m

Profile: 5yr
Flow Discharge = 230.00 cms
Computed Water Surface = 33.07 m

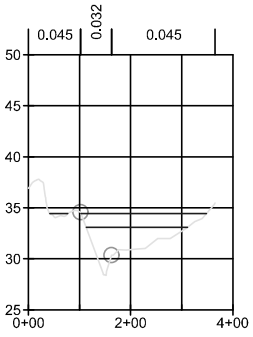

5

Profile: 100yr
Flow Discharge = 507.00 cms
Computed Water Surface = 34.44 m

Profile: 5yr
Flow Discharge = 220.00 cms
Computed Water Surface = 33.10 m

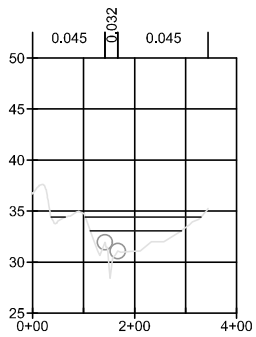

6

Profile: 100yr
Flow Discharge = 507.00 cms
Computed Water Surface = 34.42 m

Profile: 5yr
Flow Discharge = 220.00 cms
Computed Water Surface = 33.09 m

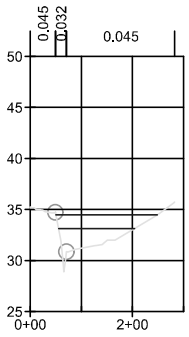

7

Profile: 100yr
Flow Discharge = 507.00 cms
Computed Water Surface = 34.47 m

Profile: 5yr
Flow Discharge = 220.00 cms
Computed Water Surface = 33.15 m

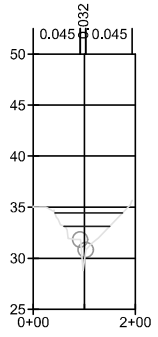

8

Profile: 100yr
Flow Discharge = 507.00 cms
Computed Water Surface = 34.44 m

Profile: 5yr
Flow Discharge = 220.00 cms
Computed Water Surface = 33.14 m

KDC - Approved Building Consent Document - BC21-608_SP_ISSUED - Pg 76 of 177 - 29/09/2021 - vsingh

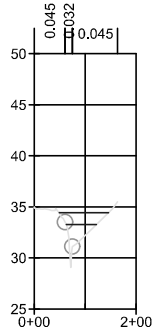

9

Profile: 100yr
Flow Discharge = 507.00 cms
Computed Water Surface = 34.43 m

Profile: 5yr
Flow Discharge = 220.00 cms
Computed Water Surface = 33.28 m

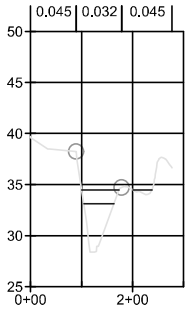

10

Profile: 100yr
Flow Discharge = 19.00 cms
Computed Water Surface = 34.47 m

Profile: 5yr
Flow Discharge = 8.33 cms
Computed Water Surface = 33.12 m

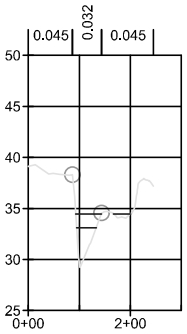

11

Profile: 100yr
Flow Discharge = 19.00 cms
Computed Water Surface = 34.47 m

Profile: 5yr
Flow Discharge = 8.33 cms
Computed Water Surface = 33.12 m

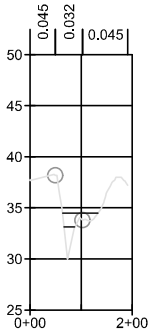

12

Profile: 100yr
Flow Discharge = 19.00 cms
Computed Water Surface = 34.47 m

Profile: 5yr
Flow Discharge = 8.33 cms
Computed Water Surface = 33.12 m

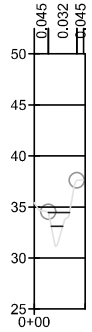

13

Profile: 100yr
Flow Discharge = 19.00 cms
Computed Water Surface = 34.47 m

Profile: 5yr
Flow Discharge = 8.33 cms

KDC - Approved Building Consent Document - BC21-608_SP_ISSUED - Pg 77 of 177 - 29/09/2021 - vsingh

HEC-RAS Profile Output Table - Standard Table 1

River Station	Profile	Q Total	Min Ch El	W.S. Elev	Crit W.S.	E.G. Elev	E.G. Slope	Vel Chnl	Flow Area	Top Width	Froude # Chl
		(m³/s)	(m)	(m)	(m)	(m)	(m/m)	(m/s)	(m²)	(m)	
9	100yr	507.00	29.07	34.431	34.147	35.055	0.006770	4.69	166.03	96.59	0.89732
9	5yr	220.00	29.07	33.274	33.274	33.830	0.009108	4.24	76.24	58.91	0.96788
8	100yr	507.00	28.80	34.440		34.736	0.002177	3.58	267.55	132.54	0.55255
8	5yr	220.00	28.80	33.141		33.452	0.002976	3.29	119.85	89.69	0.60817
7	100yr	507.00	28.88	34.472		34.544	0.000766	1.66	451.25	198.35	0.31383
7	5yr	220.00	28.88	33.146		33.210	0.001011	1.61	220.85	149.16	0.34361
6	100yr	507.00	28.43	34.424		34.483	0.000426	1.56	556.11	254.87	0.25042
6	5yr	220.00	28.43	33.085		33.132	0.000527	1.32	276.48	178.59	0.26022
5	100yr	507.00	28.39	34.434		34.471	0.000219	1.08	680.43	280.74	0.18138
5	5yr	220.00	28.39	33.095		33.120	0.000195	0.87	373.56	198.80	0.16477
13	100yr	19.00	31.14	34.471		34.475	0.000042	0.28	68.16	41.59	0.06950
13	5yr	8.33	31.14	33.119		33.125	0.000094	0.33	25.56	22.57	0.09775
12	100yr	19.00	29.97	34.470		34.473	0.000026	0.24	91.01	69.19	0.05546
12	5yr	8.33	29.97	33.117		33.121	0.000043	0.26	31.81	20.90	0.06774
11	100yr	19.00	29.21	34.471		34.472	0.000005	0.13	149.30	83.84	0.02576
11	5yr	8.33	29.21	33.119		33.119	0.000005	0.10	79.53	38.82	0.02335
10	100yr	19.00	28.39	34.472		34.472	0.000001	0.07	265.96	110.51	0.01258
10	5yr	8.33	28.39	33.119		33.119	0.000001	0.05	166.87	59.15	0.00949
4	100yr	528.00	28.39	34.403		34.461	0.000331	1.45	583.19	216.57	0.22513
4	5yr	230.00	28.39	33.069		33.112	0.000295	1.18	321.07	175.21	0.20476
3	100yr	528.00	28.36	34.407		34.454	0.000430	1.36	574.23	218.11	0.23893
3	5yr	230.00	28.36	33.071		33.105	0.000474	1.22	307.85	177.58	0.24034
2	100yr	528.00	28.03	34.235		34.372	0.000746	2.01	395.08	172.39	0.33285
2	5yr	230.00	28.03	32.884		33.008	0.001043	1.76	184.73	139.09	0.36512
1	100yr	528.00	27.63	33.047	33.047	34.035	0.006214	5.03	144.79	80.21	0.91347
1	5yr	230.00	27.63	31.871	31.871	32.603	0.007532	4.10	69.12	49.14	0.93242

KDC - Approved Building Consent Document - BC21-608_SP_ISSUED - Pg 78 of 177 - 29/09/2021 - vsingh

KDC - Approved Building Consent Document - BC21-608_SP_ISSUED - Pg 79 of 177 - 29/09/2021 - vsingh

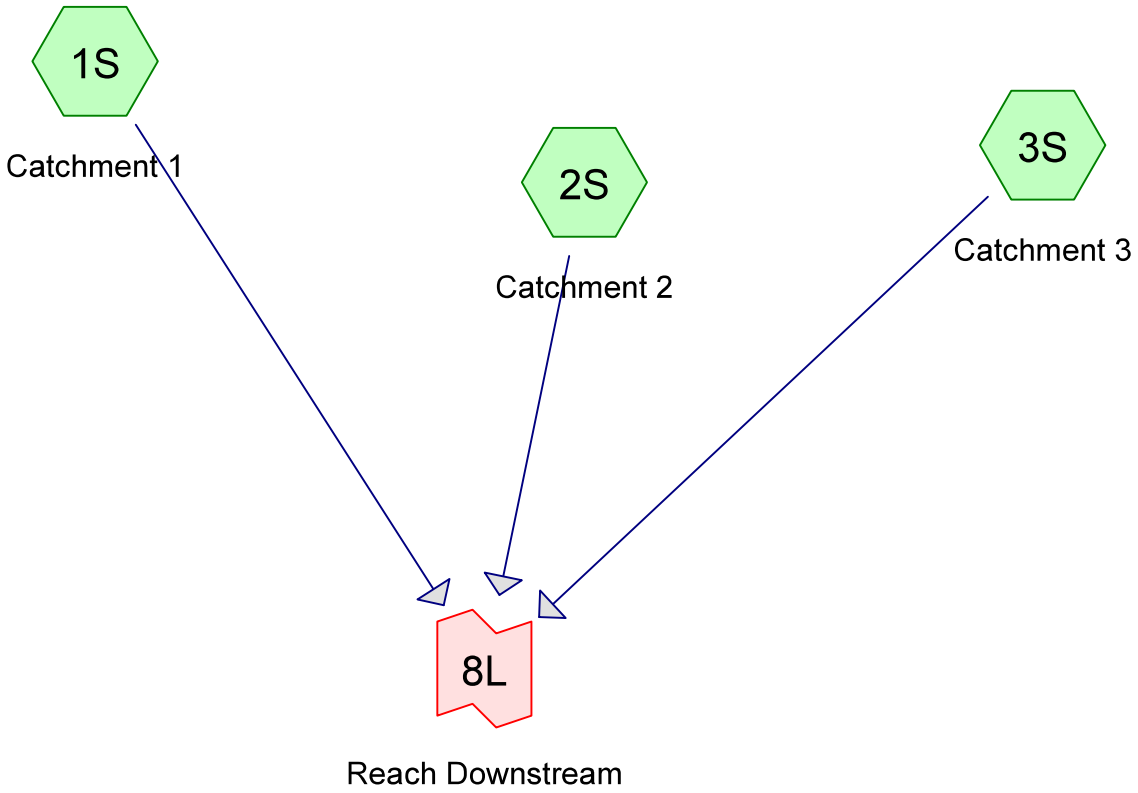

Subcat Reach Pond Link

Routing Diagram for 760Settlement
Prepared by Wilton Joubert Limited, Printed 26/06/2020
HydroCAD® 10.00-22 s/n 10413 © 2018 HydroCAD Software Solutions LLC

KDC - Approved Building Consent Document - BC21-608_SP_ISSUED - Pg 80 of 177 - 29/09/2021 - vsingh

Area Listing (all nodes)

Area (hectares)	CN	Description (subcatchment-numbers)
4.2567	80	>75% Grass cover, Good, HSG D (3S)
3,711.2380	77	Brush, Poor, HSG C (1S, 2S)
3,715.4947	**77**	**TOTAL AREA**

KDC - Approved Building Consent Document - BC21-608_SP_ISSUED - Pg 81 of 177 - 29/09/2021 - vsingh

Soil Listing (all nodes)

Area (hectares)	Soil Group	Subcatchment Numbers
0.0000	HSG A	
0.0000	HSG B	
3,711.2380	HSG C	1S, 2S
4.2567	HSG D	3S
0.0000	Other	
3,715.4947		**TOTAL AREA**

KDC - Approved Building Consent Document - BC21-608_SP_ISSUED - Pg 82 of 177 - 29/09/2021 - vsingh

Ground Covers (all nodes)

HSG-A (hectares)	HSG-B (hectares)	HSG-C (hectares)	HSG-D (hectares)	Other (hectares)	Total (hectares)	Ground Cover	Subcatchr Numbers
0.0000	0.0000	0.0000	4.2567	0.0000	4.2567	>75% Grass cover, Good	
0.0000	0.0000	3,711.2380	0.0000	0.0000	3,711.2380	Brush, Poor	
0.0000	**0.0000**	**3,711.2380**	**4.2567**	**0.0000**	**3,715.4947**	**TOTAL AREA**	

KDC - Approved Building Consent Document - BC21-608_SP_ISSUED - Pg 83 of 177 - 29/09/2021 - vsingh

Time span=0.00-48.00 hrs, dt=0.05 hrs, 961 points
Runoff by SCS TR-20 method, UH=SCS, Weighted-CN
Reach routing by Sim-Route method - Pond routing by Sim-Route method

Subcatchment 1S: Catchment 1 Runoff Area=3,654.1286 ha 0.00% Impervious Runoff Depth=248 mm
Tc=147.0 min CN=77 Runoff=507.2533 m³/s 9,059.280 Ml

Subcatchment 2S: Catchment 2 Runoff Area=57.1094 ha 0.00% Impervious Runoff Depth=248 mm
Tc=28.0 min CN=77 Runoff=19.0578 m³/s 141.585 Ml

Subcatchment 3S: Catchment 3 Runoff Area=4.2567 ha 0.00% Impervious Runoff Depth=259 mm
Tc=10.0 min CN=80 Runoff=2.1061 m³/s 11.006 Ml

Link 8L: Reach Downstream Inflow=510.9520 m³/s 9,211.871 Ml
Primary=510.9520 m³/s 9,211.871 Ml

Total Runoff Area = 3,715.4947 ha Runoff Volume = 9,211.871 Ml Average Runoff Depth = 248 mm
100.00% Pervious = 3,715.4947 ha 0.00% Impervious = 0.0000 ha

KDC - Approved Building Consent Document - BC21-608_SP_ISSUED - Pg 84 of 177 - 29/09/2021 - vsingh

Summary for Subcatchment 1S: Catchment 1

Runoff = 507.2533 m³/s @ 13.86 hrs, Volume= 9,059.280 Ml, Depth= 248 mm

Runoff by SCS TR-20 method, UH=SCS, Weighted-CN, Time Span= 0.00-48.00 hrs, dt= 0.05 hrs
ARC TP 108 24 Hour 1% AEP Rainfall=324 mm

Area (ha)	CN	Description
3,654.1286	77	Brush, Poor, HSG C
3,654.1286		100.00% Pervious Area

Tc (min)	Length (meters)	Slope (m/m)	Velocity (m/sec)	Capacity (m³/s)	Description
147.0					**Direct Entry, Tc From TP108 Calcs**

Subcatchment 1S: Catchment 1

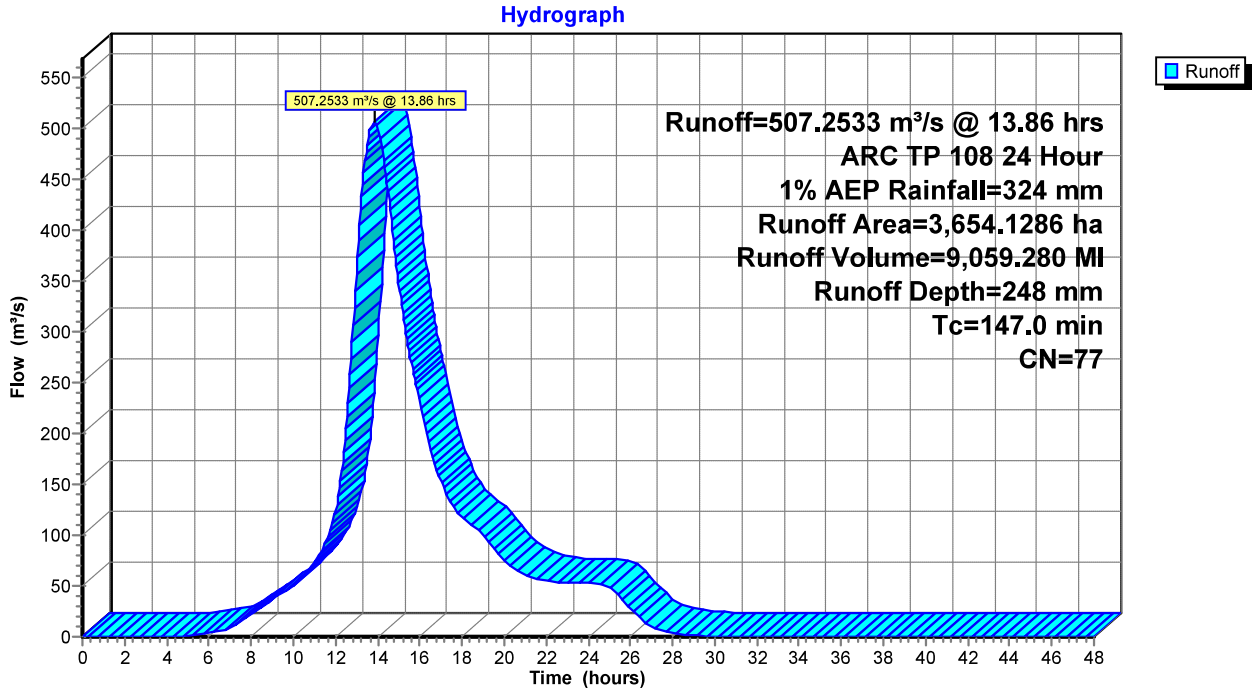

KDC - Approved Building Consent Document - BC21-608_SP_ISSUED - Pg 85 of 177 - 29/09/2021 - vsingh

Summary for Subcatchment 2S: Catchment 2

Runoff = 19.0578 m³/s @ 12.26 hrs, Volume= 141.585 Ml, Depth= 248 mm

Runoff by SCS TR-20 method, UH=SCS, Weighted-CN, Time Span= 0.00-48.00 hrs, dt= 0.05 hrs
ARC TP 108 24 Hour 1% AEP Rainfall=324 mm

Area (ha)	CN	Description
57.1094	77	Brush, Poor, HSG C
57.1094		100.00% Pervious Area

Tc (min)	Length (meters)	Slope (m/m)	Velocity (m/sec)	Capacity (m³/s)	Description
28.0					**Direct Entry,**

Subcatchment 2S: Catchment 2

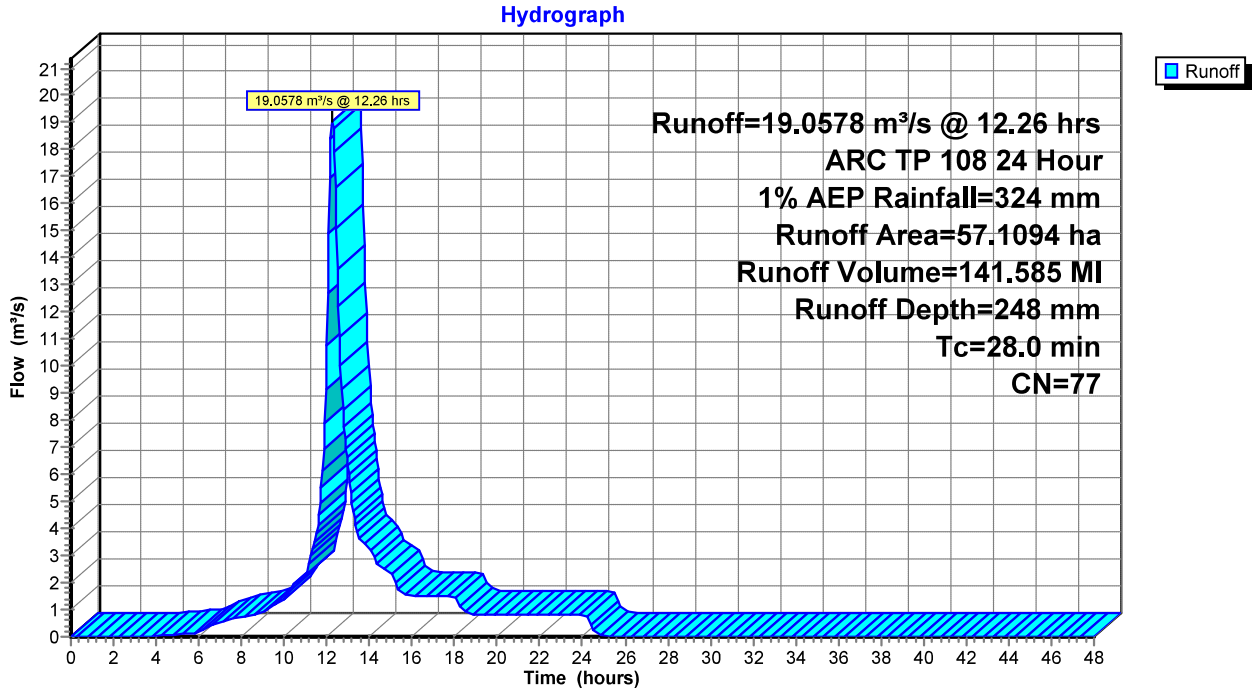

KDC - Approved Building Consent Document - BC21-608_SP_ISSUED - Pg 86 of 177 - 29/09/2021 - vsingh

Summary for Subcatchment 3S: Catchment 3

Runoff = 2.1061 m³/s @ 12.05 hrs, Volume= 11.006 Ml, Depth= 259 mm

Runoff by SCS TR-20 method, UH=SCS, Weighted-CN, Time Span= 0.00-48.00 hrs, dt= 0.05 hrs
ARC TP 108 24 Hour 1% AEP Rainfall=324 mm

Area (ha)	CN	Description
4.2567	80	>75% Grass cover, Good, HSG D
4.2567		100.00% Pervious Area

Tc (min)	Length (meters)	Slope (m/m)	Velocity (m/sec)	Capacity (m³/s)	Description
10.0					**Direct Entry,**

Subcatchment 3S: Catchment 3

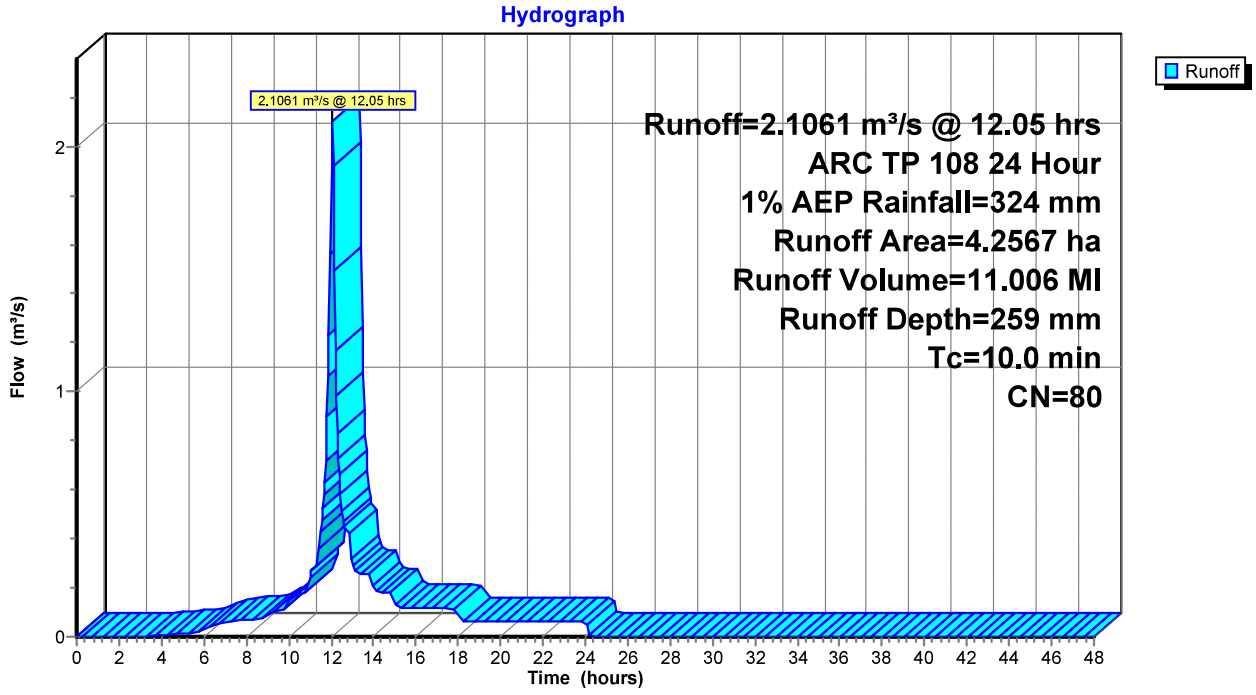

KDC - Approved Building Consent Document - BC21-608_SP_ISSUED - Pg 87 of 177 - 29/09/2021 - vsingh

Summary for Link 8L: Reach Downstream

Inflow Area = 3,715.4947 ha, 0.00% Impervious, Inflow Depth = 248 mm for 1% AEP event
Inflow = 510.9520 m³/s @ 13.86 hrs, Volume= 9,211.871 Ml
Primary = 510.9520 m³/s @ 13.91 hrs, Volume= 9,211.871 Ml, Atten= 0%, Lag= 3.0 min

Primary outflow = Inflow, Time Span= 0.00-48.00 hrs, dt= 0.05 hrs

Link 8L: Reach Downstream

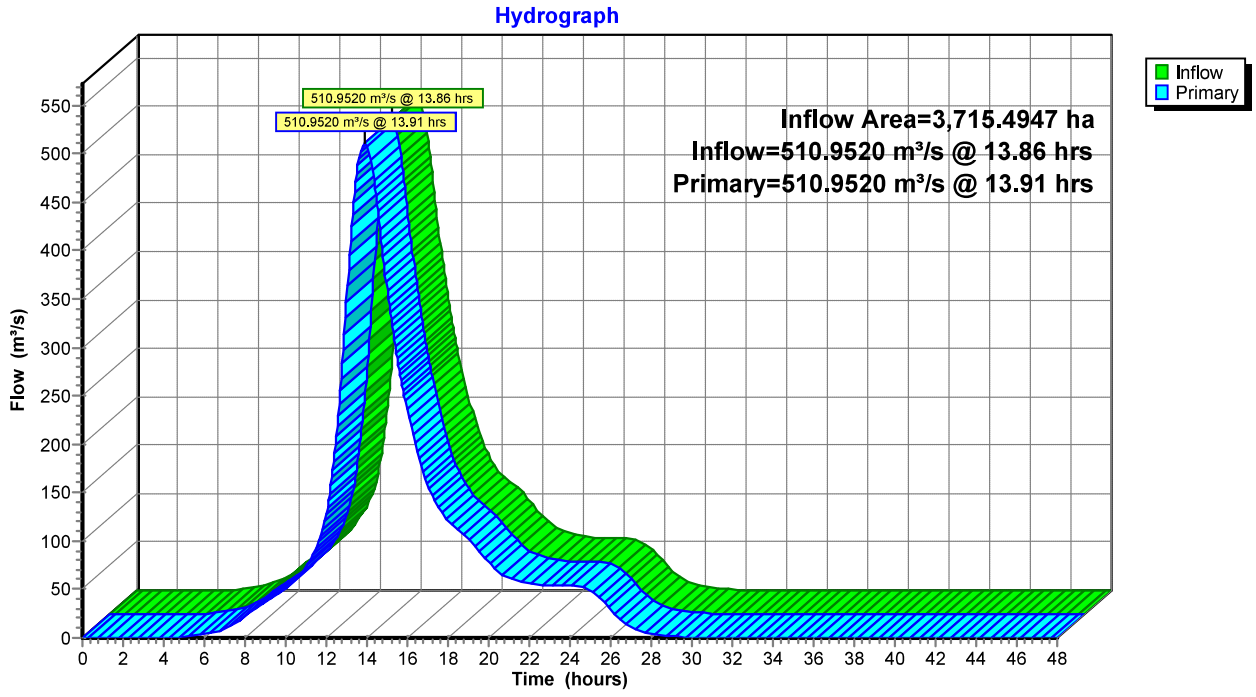

KDC - Approved Building Consent Document - BC21-608_SP_ISSUED - Pg 88 of 177 - 29/09/2021 - vsingh

Time span=0.00-48.00 hrs, dt=0.05 hrs, 961 points
Runoff by SCS TR-20 method, UH=SCS, Weighted-CN
Reach routing by Sim-Route method - Pond routing by Sim-Route method

Subcatchment 1S: Catchment 1 Runoff Area=3,654.1286 ha 0.00% Impervious Runoff Depth=107 mm
Tc=147.0 min CN=77 Runoff=220.0985 m³/s 3,894.837 Ml

Subcatchment 2S: Catchment 2 Runoff Area=57.1094 ha 0.00% Impervious Runoff Depth=107 mm
Tc=28.0 min CN=77 Runoff=8.3319 m³/s 60.871 Ml

Subcatchment 3S: Catchment 3 Runoff Area=4.2567 ha 0.00% Impervious Runoff Depth=115 mm
Tc=10.0 min CN=80 Runoff=0.9657 m³/s 4.887 Ml

Link 8L: Reach Downstream Inflow=221.8614 m³/s 3,960.596 Ml
Primary=221.8614 m³/s 3,960.596 Ml

Total Runoff Area = 3,715.4947 ha Runoff Volume = 3,960.596 Ml Average Runoff Depth = 107 mm
100.00% Pervious = 3,715.4947 ha 0.00% Impervious = 0.0000 ha

KDC - Approved Building Consent Document - BC21-608_SP_ISSUED - Pg 89 of 177 - 29/09/2021 - vsingh

Summary for Subcatchment 1S: Catchment 1

Runoff = 220.0985 m³/s @ 13.89 hrs, Volume= 3,894.837 Ml, Depth= 107 mm

Runoff by SCS TR-20 method, UH=SCS, Weighted-CN, Time Span= 0.00-48.00 hrs, dt= 0.05 hrs
ARC TP 108 24 Hour 20% AEP Rainfall=173 mm

Area (ha)	CN	Description
3,654.1286	77	Brush, Poor, HSG C
3,654.1286		100.00% Pervious Area

Tc (min)	Length (meters)	Slope (m/m)	Velocity (m/sec)	Capacity (m³/s)	Description
147.0					**Direct Entry, Tc From TP108 Calcs**

Subcatchment 1S: Catchment 1

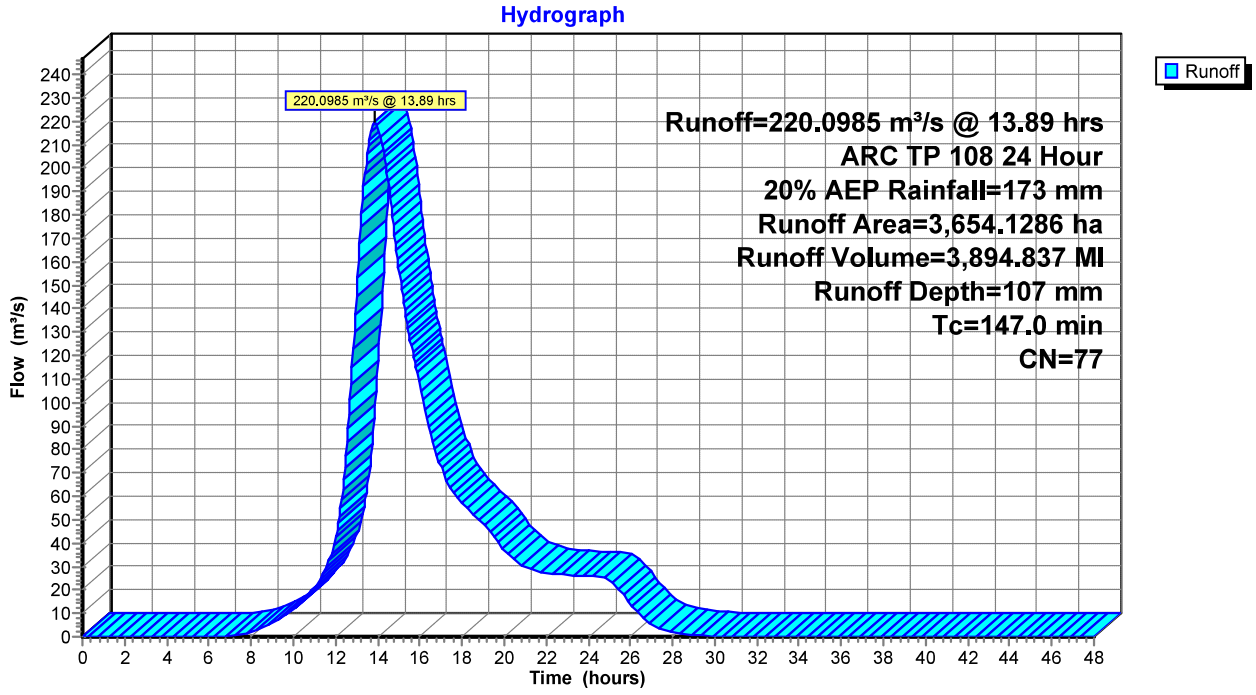

KDC - Approved Building Consent Document - BC21-608_SP_ISSUED - Pg 90 of 177 - 29/09/2021 - vsingh

Summary for Subcatchment 2S: Catchment 2

Runoff = 8.3319 m³/s @ 12.27 hrs, Volume= 60.871 Ml, Depth= 107 mm

Runoff by SCS TR-20 method, UH=SCS, Weighted-CN, Time Span= 0.00-48.00 hrs, dt= 0.05 hrs
ARC TP 108 24 Hour 20% AEP Rainfall=173 mm

Area (ha)	CN	Description
57.1094	77	Brush, Poor, HSG C
57.1094		100.00% Pervious Area

Tc (min)	Length (meters)	Slope (m/m)	Velocity (m/sec)	Capacity (m³/s)	Description
28.0					**Direct Entry,**

Subcatchment 2S: Catchment 2

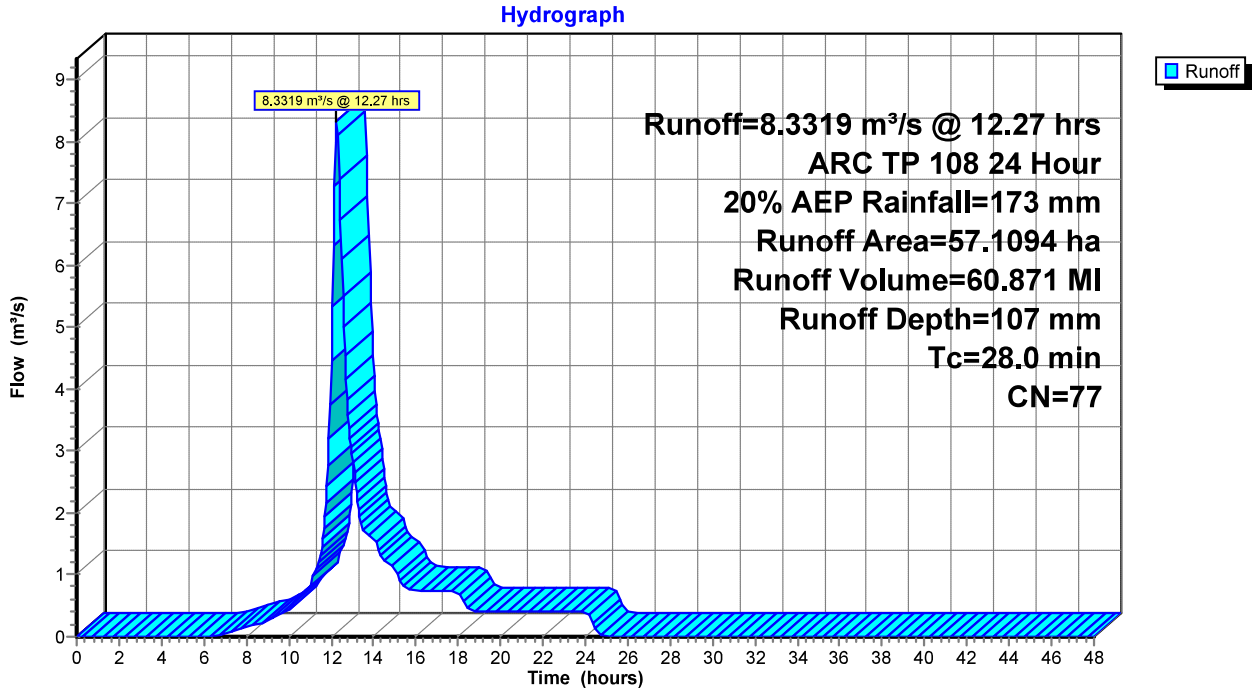

KDC - Approved Building Consent Document - BC21-608_SP_ISSUED - Pg 91 of 177 - 29/09/2021 - vsingh

Summary for Subcatchment 3S: Catchment 3

Runoff = 0.9657 m³/s @ 12.05 hrs, Volume= 4.887 Ml, Depth= 115 mm

Runoff by SCS TR-20 method, UH=SCS, Weighted-CN, Time Span= 0.00-48.00 hrs, dt= 0.05 hrs
ARC TP 108 24 Hour 20% AEP Rainfall=173 mm

Area (ha)	CN	Description
4.2567	80	>75% Grass cover, Good, HSG D
4.2567		100.00% Pervious Area

Tc (min)	Length (meters)	Slope (m/m)	Velocity (m/sec)	Capacity (m³/s)	Description
10.0					**Direct Entry,**

Subcatchment 3S: Catchment 3

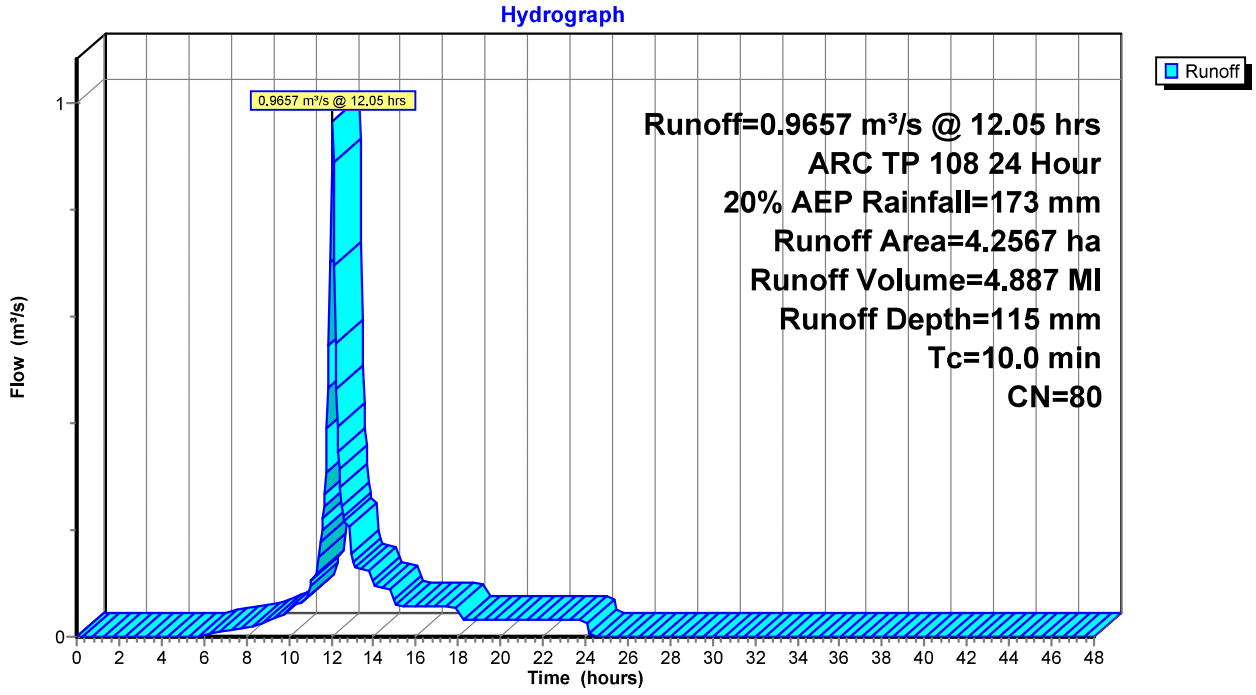

KDC - Approved Building Consent Document - BC21-608_SP_ISSUED - Pg 92 of 177 - 29/09/2021 - vsingh

Summary for Link 8L: Reach Downstream

Inflow Area = 3,715.4947 ha, 0.00% Impervious, Inflow Depth = 107 mm for 20% AEP event
Inflow = 221.8614 m³/s @ 13.89 hrs, Volume= 3,960.596 Ml
Primary = 221.8614 m³/s @ 13.94 hrs, Volume= 3,960.596 Ml, Atten= 0%, Lag= 3.0 min

Primary outflow = Inflow, Time Span= 0.00-48.00 hrs, dt= 0.05 hrs

Link 8L: Reach Downstream

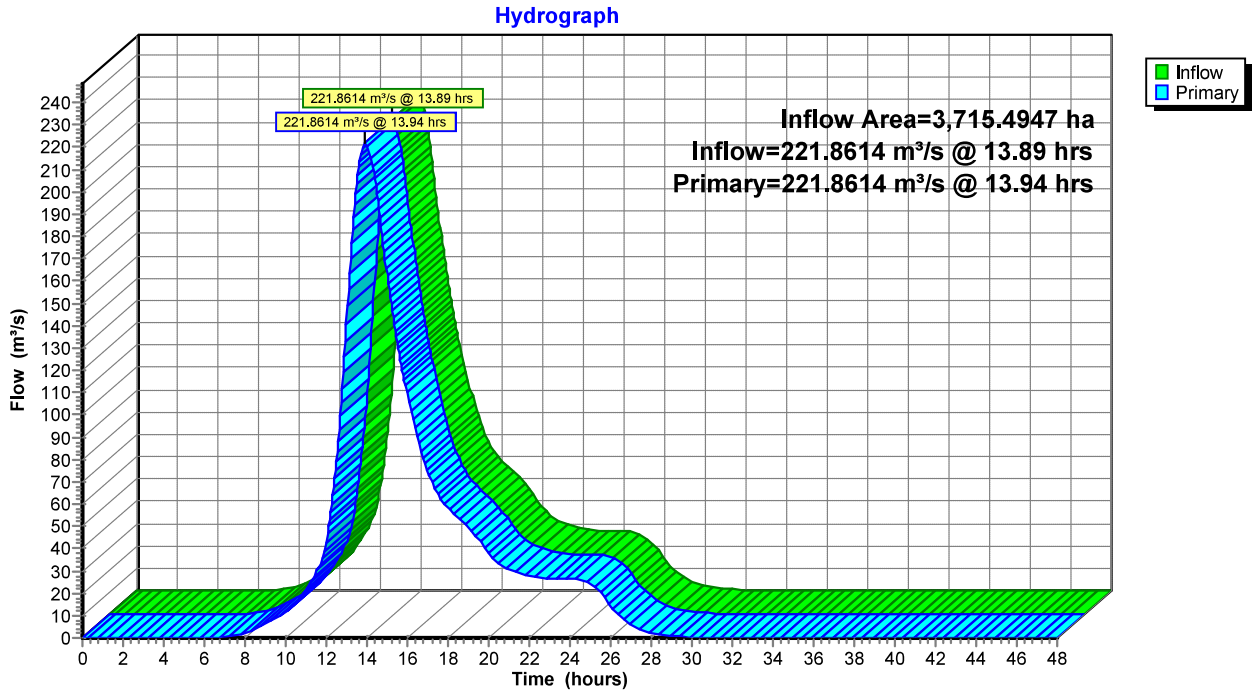

engineering new zealand

ace new zealand

association of consulting and engineering

Building Code Clause(s) B1 & B2

KDC - Approved Building Consent Document - BC21-608_SP_ISSUED - Pg 93 of 177 - 29/09/2021 - vsingh

PRODUCER STATEMENT – PS1 – DESIGN

ISSUED BY: PROCONSULT LIMITED (Design Firm) PROCONSULT JOB NO: 13611

TO: Gina Utting (Owner/Developer)

TO BE SUPPLIED TO: KAIPARA DISTRICT COUNCIL (Building Consent Authority)

IN RESPECT OF: Ribraft foundations (Description of Building Work)

AT: 752 Settlement Road, Hakaru (Address)

Town/City: Hakaru (Address) **LOT** 3 **DP** 560279 **SO**

We have been engaged by the owner/developer referred to above to provide:

STRUCTURAL ENGINEERING SERVICES TO DESIGN THE ABOVE - (as qualified in accordance with Appended Page 2)
(Extent of Engagement)

in respect of the requirements of Clause(s) B1 & B2 (refer Page 2) of the Building Code for:

☐ All or ■ Part only (as specified in the attachment to this statement), of the proposed building work.

The design carried out by us has been prepared in accordance with:

■ Compliance Documents issued by the Ministry of Business, Innovation & Employment .....B1/VM1.....or +B1/VM4
(verification method/acceptable solution)

☐ Alternative solution as per the attached schedule……

The proposed building work covered by this producer statement is described on the drawings titled:

Proposed new garage/sleepout - 752 Settlement Rd ……and numbered Sheet 5 ……;
together with the specification, and other documents set out in the schedule attached to this statement.

On behalf of the Design Firm, and subject to:
(i) Site verification of the following design assumptions Wiley Geotechnical - 23/06/2021 Gina Utting ……
(ii) All proprietary products meeting their performance specification requirements;

I believe on reasonable grounds that a) the building, if constructed in accordance with the drawings, specifications, and other documents provided or listed in the attached schedule, will comply with the relevant provisions of the Building Code and that b), the persons who have undertaken the design have the necessary competency to do so. I also recommend the following level of construction monitoring/observation:

☐ CM1 ■ CM2 ☐ CM3 ☐ CM4 ☐ CM5 (Engineering Categories) or ☐ as per agreement with owner/developer (Architectural)

I, ...Stewart Hobbs..... am: ■ CPEng #84415
(Name of Design Professional)

I am a member of: ☑ Engineering New Zealand and hold the following qualifications: BE, MBA, CPEng, FEngNZ.

The Design Firm issuing this statement holds a current policy of Professional Indemnity Insurance no less than $200,000*.
The Design Firm is a member of ACE New Zealand: ☐

SIGNED BY: .....STEWART HOBBS..... (Signature)……
(Name of Design Professional)

ON BEHALF OF .....PROCONSULT LIMITED ..... Date 03/09/2021
(Design Firm)

Note: This statement shall only be relied upon by the Building Consent Authority named above. Liability under this statement accrues to the Design Firm only. The total maximum amount of damages payable arising from this statement and all other statements provided to the Building Consent Authority in relation to this building work, whether in contract, tort or otherwise (including negligence), is limited to the sum of $200,000.*

This form is to accompany **Form 2 of the Building (Forms) Regulations 2004** for the application of a Building Consent.

THIS FORM AND ITS CONDITIONS ARE COPYRIGHT TO ACE NEW ZEALAND AND ENGINEERING NEW ZEALAND

PRODUCER STATEMENT – PS1 – DESIGN (Cont'd) Building Code Clause(s) B1 & B2

ISSUED BY: PROCONSULT LIMITED (Design Firm) PROCONSULT JOB NO: 13611

TO: Gina Utting
(Owner/Developer)

TO BE SUPPLIED TO: KAIPARA DISTRICT COUNCIL
(Building Consent Authority)

IN RESPECT OF: Ribraft foundations
(Description of Building Work)

AT: 752 Settlement Road, Hakaru
(Address)

Town/City Hakaru **LOT** 3 **DP** 560279 **SO**
(Address)

This producer statement excludes items covered by NZS 3604: 2011 for B1 and B2 and only applies to specific engineering design items identified on Page 1 of this Producer Statement and in the accompanying calculations prepared by ProConsult Limited and excludes the following:

PROPRIETARY ITEMS WHETHER OR NOT COVERED BY A SEPARATE PS1

* .....
* .....
* .....

Durability (B2):

We note that there is no effective verification method for B2 contained within the Building Code and therefore confirm that for the structural elements shown in our documentation the following applies:

Timber: Timber treatment has been selected in accordance with Table 1A of B2/AS1.
Concrete: Concrete covers have been selected in accordance with NZS 3101, Part 1, Section 3. (B2/AS1)
Mild Steel: Steel protection has been specified in accordance with the "Guide to the protection of structural steel against atmospheric corrosion by the use of protective coatings" AS/NZS 2312 and "Durability requirements for steel structures and components" SNZ TS 3404:2018. We note that this is on a time to first maintenance basis and assumes ongoing maintenance.

SNZ TS3404 C1.6 states: "The specified intended life of the building" from Clause B2 of the New Zealand Building Code does not need to be the time to first major maintenance considered when selecting an appropriate method of corrosion protection. A shorter time to first major maintenance could be selected in conjunction with an inspection and maintenance programme, which together will meet the durability provisions of NZBC Clause B2."

Site Observations:

Inspections of the works shall comprise site observations in accordance with

Engineering NZ ☐ CM1 ■ CM2 ☐ CM3 ☐ CM4 ☐ CM5 (Engineering Categories) for the following items:

Ribraft foundations pre-pour
.....
.....
.....
.....

or as otherwise requested by our Client during the course of the works.

SIGNED BY: .....STEWART HOBBS..... (Signature) .....
(Name of Design Professional)

ON BEHALF OF .....PROCONSULT LIMITED ..... Date 03/09/2021
(Design Firm)

KDC - Approved Building Consent Document - BC21-608_SP_ISSUED - Pg 94 of 177 - 29/09/2021 - vsingh

GUIDANCE ON USE OF PRODUCER STATEMENTS

Producer statements were first introduced with the Building Act 1991. The producer statements were developed by a combined task committee consisting of members of the New Zealand Institute of Architects, Institution of Professional engineers New Zealand (now Engineering New Zealand), ACE New Zealand in consultation with the Building Officials Institute of New Zealand. The original suit of producer statements has been revised at the date of this form as a result of enactment of the Building Act (2004) by these organisations to ensure standard use within the industry.

The producer statement system is intended to provide Building Consent Authorities (BCAs) with reasonable grounds for the issue of a Building Consent or a Code Compliance Certificate, without having to duplicate design or construction checking undertaken by others.

PS1 Design Intended for use by a suitably qualified independent design professional in circumstances where the BCA accepts a producer statement for establishing reasonable grounds to issue a Building Consent;

PS2 Design Review Intended for use by a suitably qualified independent design professional where the BCA accepts an independent design professional's review as the basis for establishing reasonable grounds to issue a Building Consent;

PS3 Construction Forms commonly used as a certificate of completion of building work are Schedule 6 of NZS 3910:2013 or Schedules E1/E2 of NZIA's SCC 2011[2]

PS4 Construction Review Intended for use by a suitably qualified independent design professional who undertakes construction monitoring of the building works where the BCA requests a producer statement prior to issuing a Code Compliance Certificate.

This must be accompanied by a statement of completion of building work (Schedule 6).

The following guidelines are provided by ACE New Zealand and Engineering New Zealand to interpret the Producer Statement.

Competence of Design Professional

This statement is made by a Design Firm that has undertaken a contract of services for the services named, and is signed by a person authorised by that firm to verify the processes within the firm and competence of its designers.

A competent design professional will have a professional qualification and proven current competence through registration on a national competence based register as a Chartered Professional Engineer (CPEng).

Membership of a professional body, such as Engineering New Zealand (formerly IPENZ) provides additional assurance of the designer's standing within the profession. If the design firm is a member of ACE New Zealand, this provides additional assurance about the standing of the firm.

Persons or firms meeting these criteria satisfy the term "suitably qualified independent design professional".

***Professional Indemnity Insurance**

As part of membership requirements, ACE New Zealand requires all member firms to hold Professional Indemnity Insurance to a minimum level.

The PI Insurance minimum stated on the front of this form reflects standard, small projects. If the parties deem this inappropriate for large projects the minimum may be up to $500,000.

Professional Services during Construction Phase

There are several levels of service which a Design Firm may provide during the construction phase of a project (CM1-CM5 for Engineers[3]). The Building Consent Authority is encouraged to require that the service to be provided by the Design Firm is appropriate for the project concerned.

Requirement to provide Producer Statement PS4

Building Consent Authorities should ensure that the applicant is aware of any requirement for producer statements for the construction phase of building work at the time the building consent is issued as no design professional should be expected to provide a producer statement unless such a requirement forms part of the Design firm's engagement.

Attached Particulars

Attached particulars referred to in this producer statement refer to supplementary information appended to the producer statement.

Refer Also:

1 Conditions of Contract for Building & Civil Engineering Construction NZS 3910: 2013

2 NZIA Standard Conditions of Contract SCC 2011

Guideline on the Briefing & Engagement for Consulting Engineering Services (ACE New Zealand/Engineering New Zealand 2004)

4 PN Guidelines on Producer Statements

www.acenz.org.nz
www.engineeringnz.org

engineering new zealand

ace new zealand

association of consulting and engineering

KDC - Approved Building Consent Document - BC21-608_SP_ISSUED - Pg 95 of 177 - 29/09/2021 - vsingh

proCONSULT
STRUCTURAL ENGINEERING

14B PROCALCCOV 11/03/2019

Level 2, Suite 2 322 Remuera Rd
P.O. Box 28257 Remuera 1541
Ph: (09) 973 5781 E: info@proconsult.co.nz

Client:	Gina Utting	Date:	SEPT 2021
Designer:	Aingaran M.	Job No:	13c11
Drawings by:	Habitat Design		
Address:	752 Settlement Rd		

Lot: 3
DP: 560279

Standards:

AS/NZS 1170 (2004)	Design Actions	OTHER:
NZS 3101 (2006)	Concrete Structures	
NZS 3604 (2011)	Timber Structures (non-specific)	
NZS 3404 (1997)	Steel Structures	
NZS 3603 (1993)	Timber Structures	

Loads	Dead (kPa)	Live (kPa)

Wind Zone: —
EQ Zone: 1

Exposure Zone: C

Table of Contents	Pages
Rib raft foundation + details	S01-S03

Approved by: Asher

Date: 3/9/2021

Signed:

Document Reviewer

Version 2019/03/11

KDC - Approved Building Consent Document - BC21-608_SP_ISSUED - Pg 96 of 177 - 29/09/2021 - vsingh

KDC - Approved Building Consent Document - BC21-608_SP_ISSUED - Pg 97 of 177 - 29/09/2021 - vsingh

Licensed to Mr Barry Brown on 21 July 2011, 1 user personal user licence only. Storage, distribution or use on network prohibited (40225502)

Site class	Type of construction	Beam reinforcement				Slab mesh	
		Depth (D) mm	Edge beam		Internal beam	Slab length, m	
			Mesh alternative	Bar alternative		<20	≥20 and <30
A	Clad frame	260	3-L8TM	3N12	1N12	SL72	SL82
	Articulated masonry veneer	310	3-L8TM	3N12	1N12	SL72	SL82
	Masonry veneer	310	3-L8TM	3N12	1N12	SL72	SL82
	Articulated full masonry (S/S)	310	3-L8TM	3N12	1N12	SL72	SL82
	Full masonry	—	—	—	—	—	—
S	Clad frame	260	3-L8TM	3N12	1N12	SL72	SL82
	Articulated masonry veneer	310	3-L8TM	3N12	1N12	SL72	SL82
	Masonry veneer	310	3-L8TM	3N12	1N12	SL72	SL82
	Articulated full masonry (S/S)	385	3-L8TM	3N12	1N16	SL72	SL82
	Full masonry	—	—	—	—	—	—
M	Clad frame	310	3-L11TM	3N12	1N12	SL72	SL82
	Articulated masonry veneer	310	3-L11TM	3N12	1N12	SL72	SL82
	Masonry veneer	310	3-L11TM	3N12	1N12	SL72	SL82
	Articulated full masonry (S/S)	610	2x3-L11TM	3N16	1N16	SL72	SL82
	Full masonry	—	—	—	—	—	—
M-D	Clad frame	310	3-L11TM	3N12	1N12	SL72	SL92
	Articulated masonry veneer	310	3-L11TM	3N12	1N12	SL72	SL92
	Masonry veneer	385	2x3-L11TM	3N16	1N16	SL72	SL92
	Articulated full masonry (S/S)	610	2x3-L11TM	3N16	1N16	SL72	SL92
	Full masonry	—	—	—	—	—	—
H1	Clad frame	310	3-L11TM	3N12	1N12	SL82	SL92
	Articulated masonry veneer	385	3-L11TM	3N12	1N12	SL82	SL92
	Masonry veneer	460	2x3-L11TM	3N16	1N16	SL82	SL92
	Articulated full masonry (S/S)	610	2x3-L11TM	3N16	1N16	SL82	SL92
	Full masonry	—	—	—	—	—	—
H1-D	Clad frame	310	3-L11TM	3N12	1N12	SL82	SL92
	Articulated masonry veneer	385	3-L11TM	3N12	1N12	SL82	SL92
	Masonry veneer (S/S)	460	2x3-L11TM	3N16	1N16	SL82	SL92
	Articulated full masonry	—	—	—	—	—	—
	Full masonry	—	—	—	—	—	—
H2	Clad frame	310	3-L11TM	3N12	1N12	SL82	SL92
	Articulated masonry veneer	385	2x3-L11TM	3N16	1N16	SL82	SL92
	Masonry veneer	—	—	—	—	—	—
	Articulated full masonry	—	—	—	—	—	—
	Full masonry	—	—	—	—	—	—
H2-D	Clad frame	385	2x3-L11TM	3N16	1N16	SL82	SL92
	Articulated masonry veneer (S/S)	460	2x3-L11TM	3N16	1N16	SL82	SL92
	Masonry veneer	—	—	—	—	—	—
	Articulated full masonry	—	—	—	—	—	—
	Full masonry	—	—	—	—	—	—

NOTE: S/S refers to single-storey construction.

FIGURE 3.4 (in part) WAFFLE RAFT

KDC - Approved Building Consent Document - BC21-608_SP_ISSUED - Pg 98 of 177 - 29/09/2021 - vsingh

S02

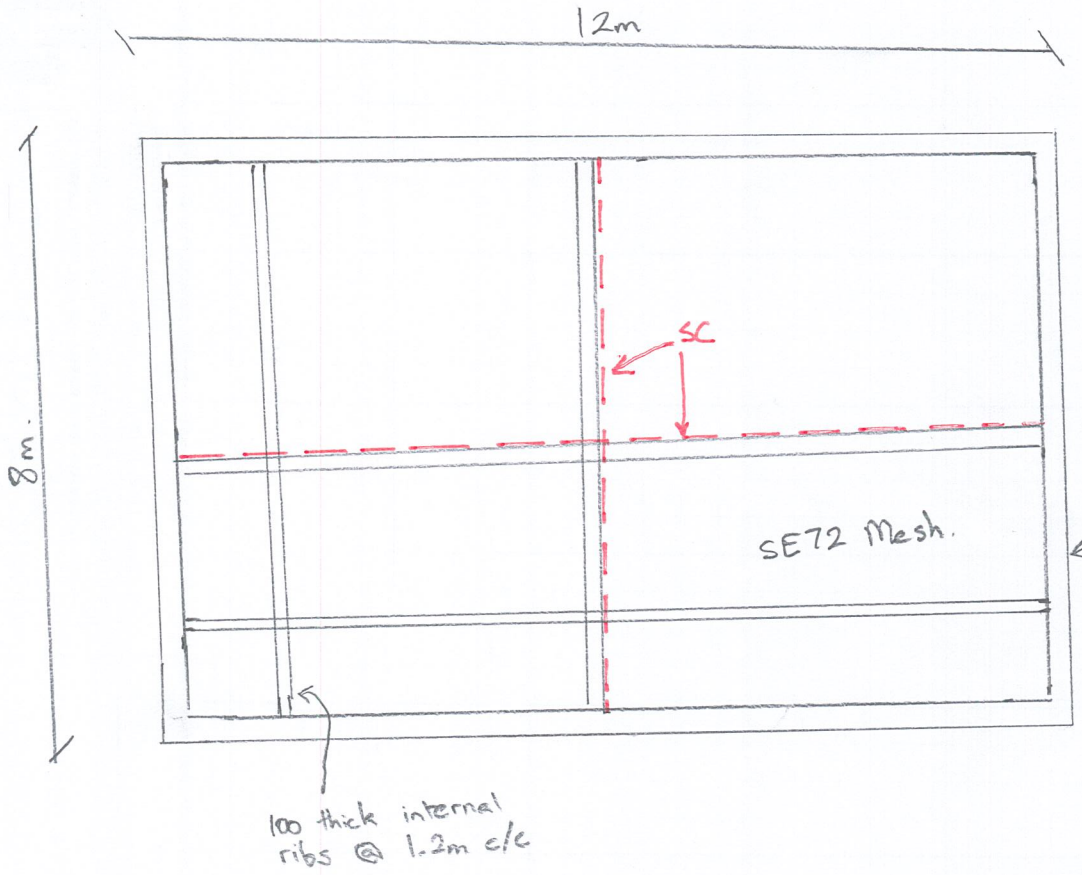

SC = 5mm x 25 deep sawcut.

Perimeter thickening 300 x 320D w/3-HD12 bottom and HD12 top.
Rebate detail where required.

No internal loadbearing thickenings required as roof is loaded to external walls via. trusses.

KDC - Approved Building Consent Document - BC21-608_SP_ISSUED - Pg 99 of 177 - 29/09/2021 - vsingh

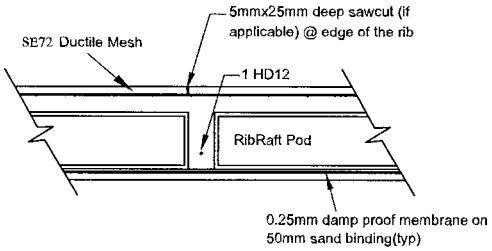

Internal Rib-100 mm Wide

Scale: 1:20

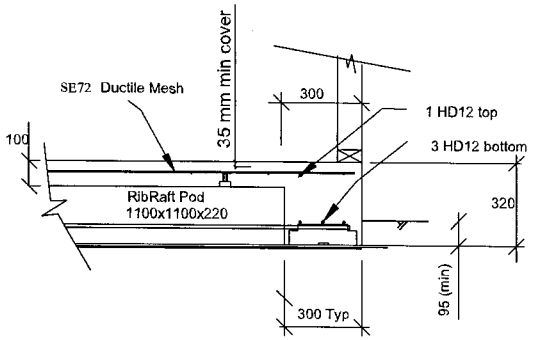

Perimeter edge thickneing

Scale: 1:20

NOTE:

All topsoil and loose material to be removed. Place 100mm layer of well compacted GAP40 before constructing Raft slab.

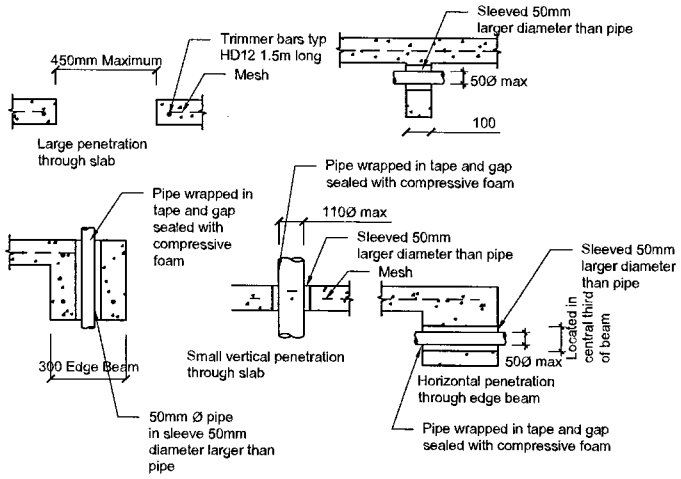

Service Penetration Detail

NTS

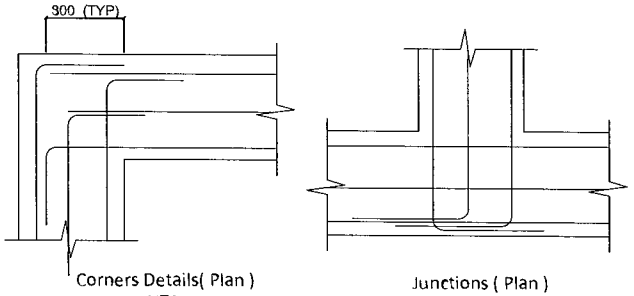

Junction Reinforcement Detail

NTS

KDC - Approved Building Consent Document - BC21-608_SP_ISSUED - Pg 100 of 177 - 29/09/2021 - vsingh

GIB EzyBrace® Systems

Wall Bracing Calculation Sheet A

JUNE 2011

Box 1

Job Details (tick appropriate boxes)

Name	GINA UHINK
Street Address	752 SETTLEMENT ROAD RAIWAKA
Lot No	DPS No
City/Town	

Location of Storey:		*Floor type:*		*Floor load:*	
Single/upper storey	✓	Sub-floor		2kPa	
Upper storey of two		Slab	✓	3kPa	
Lower storey of two					

Key dimensions			
Building height to apex		3.7	Metres
Roof height above eaves		1.5	Metres
Stud height		2.7	Metres
Average roof pitch		15	Degrees
Building Length	BL	12	Metres
Building Width	BW	8	Metres
Gross Plan Area	GPA	96	Sq Metres

Note: When the average roof pitch is over 25 degrees, use the eaves length and width to determine BL and BW

		Medium	Heavy
Cladding weight	(Light)		
Sub-floor			
Lower storey			
Upper or Single Storey			

Roof weight	(Light)	Heavy

Room in roof space	Yes	(No)

Box 2

Wind Zone

Action	Reference	Values available	Outcome
Wind Region	Figure 5.1	A, W	
Lee Zone	Figure 5.1	Yes, No	
Ground Roughness	Page 6	Urban, Open	
Site Exposure	Page 7	Sheltered, Exposed	
Topographic Class	Tables 5.2 and 5.3 + Fig 5.2	Gentle to Steep	
Wind Zone	Table 5.4	L, M, H, VH, EH, SED	

Box 3

Earthquake Zone

Action	Reference	Values available	Outcome
Earthquake Zone	Figure 5.4	1, 2, 3, 4	1
Site subsoil classification	Page 9	A, B, C, D, E	

Box 4

BUs required Wind

W Across			40	BUs per m
W Along			45	BUs per m

(From NZS 3604:2011 tables 5.5, 5.6 and 5.7)

Total Wind Load

	Enter BL from box 1	Multiply by	BUs per m Across	Equals Across W required
W Across	12	X	40	48.0

	Enter BW from box 1	Multiply by	BUs per m Along	Equals Along W required
W Along	8	X	45	360

Box 5

BUs required Earthquake

E = 3 | | BUs per m²

(From NZS 3604:2011 tables 5.8, 5.9 and 5.10)

Note: For a room in the roof space use E + 3 BU/m²

Total Earthquake Load

EQ Requirement Along and Across	Enter GPA from box 1	Multiply by	E	Equals E required
	96	X	3	288

Transfer to calculation sheet B

For manual calculations only

© Winstone Wallboards 2011. This page may be photocopied in its entirety for the purpose of carrying out bracing calculations. Winstone Wallboards Limited otherwise reserves all rights including the right to be identified as the owner of copyright in the works.

Design

GIB EzyBrace® Systems

Wall Bracing Calculation Sheet B

JUNE 2011

Along

WALL OR BRACING LINE		BRACING ELEMENTS PROVIDED			WIND		EARTHQUAKE	
1	2	3	4	5	6 W	7 W	6 E	7 E
Line Label	Minimum BUs Required	Bracing Element No.	Bracing Type	Length Element (m) L	Rating BU/m W	BUs Achieved (BU/m x L) W	Rating BU/m E	BUs Achieved (BU/m x L) E
A	180	1	BLI-H	.8m	64			
		2	BLI-H	.8m	64			
		3	GSI-H	2.4m	148	216		
B	100	4	GSI-N	1.2m	75			
		5	GSI-N	.8m	50	125		
C	180	6	GSI-N	3.6	*224	224		
D								
E								

Totals Achieved			
From Sheet A	Totals Required	W achieved	565
		W required*	360
		W achieved must exceed W required*	
		E achieved	
		E required*	
		E achieved must exceed E required*	

* from Calculation Sheet A

Across

WALL OR BRACING LINE		BRACING ELEMENTS PROVIDED			WIND		EARTHQUAKE	
1	2	3	4	5	6 W	7 W	6 E	7 E
Line Label	Minimum BUs Required	Bracing Element No.	Bracing Type	Length Element (m) L	Rating BU/m W	BUs Achieved (BU/m x L) W	Rating BU/m E	BUs Achieved (BU/m x L) E
M	120	7	GSI-N	3.0	185	185		
N	100	8	GSI-N	3.0	185	185		
O	120	9	GSI-N	1.6	98			
		10	GSI-N	1.2	74	172		
P								
Q								

Totals Achieved			
From Sheet A	Totals Required	W achieved	542
		W required*	480
		W achieved must exceed W required*	
		E achieved	
		E required*	
		E achieved must exceed E required*	

* from Calculation Sheet A

For manual calculations only

MiTek New Zealand Limited

Correspondence from : **AUCKLAND**
40 Neales Road, East Tamaki 2013
PO Box 58-014, Botany 2163
Phone: 09 274 7109
Fax: 09 274 7100

CHRISTCHURCH
14 Pilkington Way, Wigram 8042
PO Box 8387, Riccarton 8440
Phone: 03 348 8691
Fax: 03 348 0314

www.miteknz.co.nz

MiTek 20/20 Engineering 4.7.301.0

Printed: 12:40:37 20 Aug 2021

KDC - Approved Building Consent Document - BC21-608_SP_ISSUED - Pg 101 of 177 - 29/09/2021 - vsingh

PRODUCER STATEMENT for MiTek 20/20® TRUSS DESIGN - Version 4.7

ISSUED BY: **MiTek New Zealand Limited**

TO: **Dysart Manufacturing, (09) 521 3609**

IN RESPECT OF: **MiTek® Truss Designs**

This producer statement covers the MiTek 20/20® truss design and the structural performance of the GANG-NAIL® connector plate for the job reference **0949-21** and may be used by a Building Consent Authority to assist in determining compliance with the New Zealand Building Code.

The MiTek 20/20® truss design program has been developed by MiTek New Zealand Limited for the design of MiTek® timber roof, floor and attic trusses in New Zealand. The truss designs computed by MiTek 20/20 ® are prepared using sound and widely accepted engineering principles, and in accordance with compliance documents of the New Zealand Building Code and Verification Method B1/VM1; and internationally accepted standard ANSI/TPI 1 - 2002 as an alternative solution, to satisfy the requirements of Clause B1 of the New Zealand Building Code.

On behalf of MiTek New Zealand Limited, and subject to:

i) All proprietary products meeting their performance specification requirements
ii) The provision of adequate roof bracing and overall building stability
iii) Correct selection and placement of GANG-NAIL connector plates
iv) Correct input of Truss Design Data as shown in the Fabricator Design Statement for this job
v) The design being undertaken by the accredited fabricator under the terms of the software licence
vi) Timber is graded to the requirements of NZS 3603:1993
vii) Minimum timber treatment for these MiTek® trusses shall be in accordance with B2/AS1 Table 1A and the relevant sections of NZS 3602:2003

I believe on reasonable grounds that the trusses, if constructed in accordance with the MiTek 20/20® truss design and shop drawings, will comply with the relevant provisions of the New Zealand Building Code.

MiTek New Zealand Limited holds a current policy of Professional Indemnity Insurance no less than $500,000.

On behalf of MiTek New Zealand Limited, **Date: Friday, 20 August 2021**



In Ling Ng, BE (Hons), CPEng, IntPE, MIPENZ (ID: 146585)
TECHNICAL SERVICES MANAGER, MiTek New Zealand Limited

Job: 0949-21 Client: HABITECH Site:
Phone:
752 SETTLEMENT RD
KAIWAKA
Description:
Building Consent No.:
Phone:

MITEK FABRICATOR DESIGN STATEMENT

This statement is issued by MiTek accredited fabricator **Dysart Manufacturing, (09) 521 3609**, being licensed to use the MiTek 20/20® software, to the client listed above and may be used by the Building Consent Authority to assist in determining compliance with the New Zealand Building Code.

KDC - Approved Building Consent Document - BC21-608_SP_ISSUED - Pg 102 of 774 - 29/09/2021 version

MiTek 20/20® TRUSS DESIGN DATA

The MiTek 20/20® computer design for this job is based on the following design parameters entered into the program. The Fabricator shall ensure that these job details are current and relevant to the project for the design of the MiTek ® trusses.

Job Details Importance Level : 2 Design Working Life : 50 years

Roof Truss

Timber Group:	Dysart Truss H1.2	Pitch:	15.000 deg	Nominal Overhang:	600 mm
Roof		**Ceiling**		**Wind**	
Material:	Light	Material:	Standard	Area:	High (44.0 m/s)
Dead Load:	0.250 kPa	Dead Load:	0.200 kPa	Pressure Coeff:	Cpe = varies; Cpi = -0.30, 0.20
Restraints:	1200 mm centres	Restraints:	400 mm centres		
Live Load:	Qur = 0.250 kPa Qc = 1.100 kN	Live Load:	Qc = 1.400 kN		

The minimum timber treatment for these MiTek® trusses shall be in accordance with B2/AS1 Table 1A and the relevant sections of NZS 3602:2003. The timber for these MiTek® trusses shall be graded to the requirements of NZS 3603:1993. Proprietary fixings and timber connectors shall be selected in accordance with NZS3604:2011 Section 4 - Durability.

MiTek® Truss List

Legend: * = detail only, ? = input only, ~~Txx~~ = failed design, Ø = non certified, Unmarked trusses = designed successfully, LB = lateral bracing required
GB = gable brace required

Truss	Qty	Span (mm)	Pitch (deg)	Spacing (mm)
T1	13	8000	15.000	854
ET1	2	8015	15.000	854

Total quantity : 15

The computer design input has been carried out by:

Signed: ..... Date: ...Friday, 20 August 2021....

Name of Detailer: Andy Hackshaw Qualifications and Title:

On behalf of: Dysart Manufacturing, (09) 521 3609

Habitat Design Ltd

SPECIFICATION
of work to be done and materials to be used in carrying out the works shown on the accompanying drawings

KDC - Approved Building Consent Document - BC21-608_SP_ISSUED - Pg 103 of 177 - 29/09/2021 - vsingh

Proposed Garage/Sleepout

Project Specification

752 Settlement Road, Hakaru, Kaiwaka, New Zealand
Project Ref:

Printed: 07 September 2021

TABLE OF CONTENTS

1220	PROJECT	2
1232	INTERPRETATION & DEFINITIONS	4
1232S1	EXPLANATION OF SCHEDULE SECTIONS	6
1233	REFERENCED DOCUMENTS	7
3155	RAFT FLOOR SYSTEM	8
3820	CARPENTRY	13
4161T	THERMAKRAFT UNDERLAYS, FOILS, DPC, DPM, & TAPES	17
4223SC	SHADOWCLAD® PLYWOOD CLADDING	23
4311RI	ROOFING INDUSTRIES PROFILED METAL ROOFING	30
5113G	GIB® PLASTERBOARD LININGS	36
6700	PAINTING GENERAL	42
6711	PAINTING EXTERIOR	48
7123B	BUTELINE HOT & COLD WATER SYSTEM	50
7701	ELECTRICAL BASIC	58

KDC - Approved Building Consent Document - BC21-608_SP_ISSUED - Pg 104 of 177 - 29/09/2021 - vsingh

1220 PROJECT

1 GENERAL

This general section describes the project including:

- A description of the work
- Design construction safety
- Principal's Health & Safety matters
- Site description, features and restrictions
- Design parameters for design by contractor
- Archaeological discovery

1.1 READ ALL SECTIONS TOGETHER

Read all general sections together with all other sections.

1.2

1.3 RESTRICTED BUILDING WORK

This project includes Restricted Building Work.

Design Construction Safety

1.4 DESIGN CONSTRUCTION SAFETY

The project designers are unaware of unusual or atypical features, which a reasonably experienced contractor may not be aware of, that may present a hazard or risk during a typical construction process. The Contractor is still required to undertake its own assessment, to determine if they consider there are any further safety matters and provide for these in carrying out the construction of the work.

Principal's Health & Safety Matters

1.5 PRINCIPAL'S KNOWN SITE HAZARDS

Site hazards known to the principal are:
~

1.6 PRINCIPAL'S SITE HEALTH AND SAFETY PLAN

Obtain a copy of the principal's site health and safety plan.

Site

1.7 SITE

The site consists of: ~
As shown on drawing: ~

1.8 LEGAL DESCRIPTION

The site of the works, the street address and the legal description are shown on the drawings.

1.9 EXISTING SERVICES

The services are also shown on the drawings.

1.10 SITE FEATURES

~

KDC - Approved Building Consent Document - BC21-608_SP_ISSUED - Pg 105 of 177 - 29/09/2021 - vsingh

Site environment - Durability

1.11 EXPOSURE ZONE

The exposure zone is to NZS 3604, Section 4 Durability, 4.2 Exposure zones and NZBC E2/AS1.
The site zone is: ~

Site environment - Wind

1.12 WIND DESIGN PARAMETERS - NON SPECIFIC DESIGN

The design wind pressures are to NZS 3604, Table 5.4 Determination of wind zone, up to and including Extra High Wind Zone.
Building wind zone High

Site environment - Seismic

1.13 EARTHQUAKE ZONE - NON SPECIFIC DESIGN

The zone is to NZS 3604, Section 5 Bracing design, 5.3 Earthquake bracing demand.
The earthquake zone 1
is:

Archaeological discovery

1.14 REPORT FINDING ANY ANTIQUITIES AND ITEMS OF VALUE

Report the finding of any fossils, antiquities and other items of value, to the Contract Administrator. All to remain undisturbed until approval is given for removal.

Pre-1900, items or evidence of human activity on the site, come under the Heritage New Zealand Pouhere Taonga Act 2014. If such items or evidence is discovered work must stop immediately and the Contract Administrator must be notified immediately. The site may be classified as an Archaeological Site under the Act, and the Contract Administrator or Owner must contact the Heritage New Zealand for authority to proceed.

Post-1900 items remain the property of the owner, pre-1900 items may remain the property of the owner or the Crown subject to what is found.
Known archaeological information relating to this site includes the following: -
~

KDC - Approved Building Consent Document - BC21-608_SP_ISSUED - Pg 106 of 177 - 29/09/2021 - vsingh

1232 INTERPRETATION & DEFINITIONS

1 GENERAL

KDC - Approved Building Consent Document - BC21-608_SP_ISSUED - Pg 107 of 177 - 29/09/2021 - vsingh

This general section relates to definitions and interpretation that are used in this specification.

Definitions

1.1 DEFINITIONS

Hold point:	A stage of the construction where the contract administrator and any other nominated person requires notice to be given that particular work is to be carried out. Work may not proceed on that particular part until the contract administrator and any other nominated person has advised that work can continue. A notice period of 2 Working Days is required unless stated otherwise.
Notification point:	A stage of the construction where the contract administrator and any other nominated person requires notice to be given that particular work is to be carried out. Work may continue and the contract administrator and any other nominated person may choose whether or not they wish to witness the particular work being carried out. A notice period of 2 Working Days is required unless stated otherwise.
Product:	A thing or substance produced by natural process or manufacture.
Proprietary:	Identifiable by naming the manufacturer, supplier, installer, trade name, brand name, catalogue or reference number.
Provide and fix:	"Provide" or "fix" or "supply" or "fix" if used separately mean provide and fix unless explicitly stated otherwise.
Required:	Required by the documents, the New Zealand Building Code or by a statutory authority.
Review:	Review by the contract administrator and other consultants is for general compliance only. Review does not remove the need for the contractor to comply with the stated requirements, details and specifications of the manufacturers and suppliers of individual components, materials and finishes. Neither can the review be construed as authorising departures from the contract documents.
Working day:	Working day means a calendar day other than any Saturday, Sunday, public holiday or any day falling within the period from 24 December to 5 January, both days inclusive, irrespective of the days on which work is actually carried out.
Workplace:	Workplace means the place where work is being carried out, or is customarily carried out, for a business or undertaking including any place where a worker goes, or is likely to be, while at work (under Health and Safety at Work Act 2015).

1.2 PERSONNEL

Principal:	The person defined as "Principal" in the conditions of contract.
Contractor:	The person contracted by the principal to carry out the contract.
Contract administrator:	The person appointed by the principal to administer the contract on the principal's behalf. Where no person has been appointed by the principal, it means the principal or the principal's representative.

KDC - Approved Building Consent Document - BC21-608_SP_ISSUED - Pg 108 of 177 - 29/09/2021 - vsingh

1.3 ABBREVIATIONS

The following abbreviations are used throughout the specification:

AAMA	American Architectural Manufacturers Association
AS	Australian Standard
AS/NZS	Joint Australian/New Zealand Standard
ASTM	American Society for Testing and Materials
AWCINZ	Association of Wall and Ceiling Industries of New Zealand Inc.
BCA	Building Consent Authority
BRANZ	Building Research Association of New Zealand
BS	British Standard
COP	Code of practice
CSIRO	Commonwealth Scientific and Industrial Research Organisation
HERA	Heavy Engineering Research Association
LBP	Licensed Building Practitioner
MBIE	Ministry of Business, Innovation and Employment
MPNZA	Master Painters New Zealand Association Inc
NZBC	New Zealand Building Code
NZS	New Zealand Standard
NZS/AS	Joint New Zealand/Australian Standard
NZTA	New Zealand Transport Agency
NUO	Network Utility Operator
OSH	Occupational Safety and Health
PCBU	Person Conducting a Business or Undertaking (under Health and Safety at Work Act 2015)
RBW	Restricted Building Work
SARNZ	Scaffolding and Rigging New Zealand Inc
SED	Specific Engineering Design
TA	Territorial Authority
TNZ	Transit New Zealand (Transit New Zealand is now New Zealand Transport Agency NZTA - some specifications are still prefixed TNZ)

1.4 DEFINED WORDS

Words defined in the conditions of contract, New Zealand Standards, or other reference documents, to have the same interpretation and meaning when used in their lower case, title case or upper case form in the specification text.

1.5 WORDS IMPORTING PLURAL AND SINGULAR

Where the context requires, words importing singular only, also include plural and vice versa.

1232S1 EXPLANATION OF SCHEDULE SECTIONS

1 GENERAL

This general section provides an explanation of schedule sections and their relationship to general sections and work sections. Specific schedule sections contained within this specification are also identified.

1.1 EXPLANATION OF SCHEDULE SECTIONS

A schedule section identifies work sections that contain common requirements, as identified in the title of the schedule section. For example 1235S1 SCHEDULE OF SHOP DRAWINGS identifies work sections that have requirements for shop drawings. Details of the requirements are contained in the identified work sections with additional requirements contained in the general section 1235 SHOP DRAWINGS.

Some schedule sections are identified by the 4 digit CBI (Co-ordinated Building Information) number of the general section that they relate to, followed by the letter "S" followed by a numeral (1-9). The numeral allows for multiple schedule sections to be associated with the same general section.

Other schedule sections that do not share a common CBI number with a general section, have their own unique 4 digit CBI number, followed by the letter "S" followed by a numeral. These schedule sections contain additional subject content relating to the schedules and the identified work sections.

1.2 SCHEDULE SECTIONS

There are no work section requirements.

KDC - Approved Building Consent Document - BC21-608_SP_ISSUED - Pg 109 of 177 - 29/09/2021 - vsingh

1233 REFERENCED DOCUMENTS

1 GENERAL

1.1 REFERENCED DOCUMENTS

Throughout this specification, reference is made to various New Zealand Building Code Compliance Documents (NZBC __), acceptable solutions (__ AS_) and verification methods (__ VM_) for criteria and/or methods used to establish compliance with the New Zealand Building Code.

Reference is also made to various standards produced by Standards New Zealand (NZS, AS/NZS, NZS/AS), overseas standards and to listed Acts, Regulations and various industry codes of practice and practice guides. The latest edition (including amendments and provisional editions) at the date of this specification applies unless stated otherwise.

It is the responsibility of the contractor to be familiar with the materials and expert in the techniques quoted in these publications.

Documents cited both directly and within other cited publications are deemed to form part of this specification. However, this specification takes precedence in the event of it being at variance with the cited documents.

1.2 DOCUMENTS

Documents referred to in the GENERAL sections are:

NZBC F5/AS1	Construction and demolition hazards
AS/NZS 1170.2:2011	Structural design actions - Wind actions
NZS 1170.5	Structural design actions - Earthquake actions - New Zealand
AS/NZS 3012	Electrical installations - Construction and demolition sites
NZS 3109	Concrete construction
NZS 3114	Specification for concrete surface finishes
NZS 3602	Timber and wood-based products for use in building
NZS 3604	Timber-framed buildings
NZS 4210	Masonry construction: Materials and workmanship
NZS 4781	Code of Practice for Safety in Welding and Cutting
AS/NZS 5131	Structural steelwork - Fabrication and erection
NZS 6803	Acoustics - Construction Noise

Building Act 2004
Building Regulations 1992
Health and Safety at Work Act 2015
Health and Safety at Work (General Risk and Workplace Management) Regulations 2016
Health and Safety at Work (Hazardous Substances) Regulations 2017
Health and Safety in Employment Regulations 1995
New Zealand Building Code
Heritage New Zealand Pouhere Taonga Act 2014
Resource Management Act 1991
Smoke-free Environments Act 1990

WorkSafe	Guidelines for the provision of facilities and general safety in the construction industry
WorkSafe	Good Practice Guidelines - Excavation Safety
WorkSafe	Scaffolding in New Zealand - Good Practice Guidelines
WorkSafe	Managing Work Site Traffic - Good Practice Guidelines

KDC - Approved Building Consent Document - BC21-608_SP_ISSUED - Pg 110 of 177 - 29/09/2021 - vsingh

3155 RAFT FLOOR SYSTEM

1 GENERAL

KDC - Approved Building Consent Document - BC21-608_SP_ISSUED - Pg 111 of 177 - 29/09/2021 - vsingh

This section relates to a raft floor system, a non specific design reinforced concrete waffle raft floor slab-on-ground.

1.1

1.2 ABBREVIATIONS AND DEFINITIONS

Refer to the general section 1232 INTERPRETATION & DEFINITIONS for abbreviations and definitions used throughout the specification.

The following definitions apply specifically to this section:

ACRS	Australian Certification Authority for Reinforcing Steels - An independent certification scheme for reinforcing steel and structural steel, by product and manufacturer/processor. Certifies compliance with Australia/New Zealand Standards. ACRS Web site - www.steelcertification.com

1.3 DOCUMENTS

Documents referred to in this section are:

NZBC B1/VM1	Structure
NZS 3104	Specification for concrete production
NZS 3109	Concrete construction
NZS 3114	Specification for concrete surface finishes
NZS 3604	Timber-framed buildings
NZS 4229	Concrete masonry buildings not requiring specific engineering design
AS/NZS 4671	Steel reinforcing materials

Documents listed above and cited in the clauses that follow are part of this specification. However, this specification takes precedence in the event of it being at variance with the cited document.

1.4

Requirements

1.5 QUALIFICATIONS

Tradespeople to be competent, experienced and familiar with the raft floor system materials and techniques specified.

1.6 STEEL REINFORCING COMPLIANCE

Steel reinforcing materials for concrete to AS/NZS 4671. Steel to be manufactured in New Zealand, or by an overseas manufacturer holding a current valid (or equivalent) NZ S Mark or ACRS certificate for that type of steel. Confirm compliance and provide evidence if requested.

1.7 QUALITY RECORDS

Keep accurate records relating to strength and quality of materials used during construction. Include records of workmanship during construction and photographs of as-built details. Make the information available to the Building Consent Authority inspector on request.

Performance

1.8 INSPECTION NOTIFICATION REQUIREMENTS

~

1.9 INSPECTIONS BY CONSTRUCTION REVIEWER

~

1.10 INSPECTIONS BY BUILDING CONSENT AUTHORITY

~

KDC - Approved Building Consent Document - BC21-608_SP_ISSUED - Pg 112 of 177 - 29/09/2021 - vsingh

2 PRODUCTS

Materials

2.1 BLINDING

50mm maximum compacted GAP 7.

2.2 TIMBER FORMWORK

No. 2 framing and dressing or merchantable grade radiata pine boards to NZS 3631.

2.3 DAMP-PROOF MEMBRANE

0.25mm minimum polyethylene to NZS 3604: clause 7.5.4, Damp-proof membrane (DPM). Refer to SELECTIONS.

2.4 POLYSTYRENE PODS

Proprietary purpose made polystyrene pods.

2.5 REINFORCEMENT

Bars to AS/NZS 4671. Grade 500E deformed, other than for ties, stirrups and spirals, unless shown otherwise on the drawings.

2.6 INTERNAL CORNER REINFORCEMENT

Minimum 2 x D10 bars Grade 300E to AS/NZS 4671.

2.7 MESH

Welded reinforcing mesh to AS/NZS 4671 as modified by NZS B1/VM1, generally, Class E, minimum to NZBC B1/AS1 - Grade 500E, 2.27kg/m2 (1.14kg/m2 in each direction). Minimum SE62 500E mesh or the equivalent.

2.8 TYING WIRE

Mild drawn steel wire not less than 1.2mm diameter.

2.9 CONCRETE - RAFT APPLICATIONS

20 MPa 100mm slump mix in either 13mm or 19mm nominal aggregate size.

Components

2.10 SPACERS

Proprietary spacers. Refer to SELECTIONS for size.

3 EXECUTION

Conditions

3.1 STORAGE

Take delivery of and accept all materials and accessories dry and undamaged. Store on timber fillets on hard ground protected from weather, contamination and damage in a secure area clear of any building operation.

Handle and store reinforcing steel and accessories without damage or contamination.
Ensure reinforcement is clean and remains clean so that at the time of placing concrete it is free of all loose mill scale, loose rust and any other contamination that may reduce bonding capacity. Store steel fabric flat.

3.2 HANDLING

Avoid distribution and contact with damaging substances. Do not drag sheets across each other and other materials. Protect edges and surface finishes from damage.

KDC - Approved Building Consent Document - BC21-608_SP_ISSUED - Pg 113 of 177 - 29/09/2021 - vsingh

Application - raft floor system

3.3 SITE CLEARANCE

Clear the slab area of any vegetation and topsoil down to the subgrade level.

3.4 BUILDING PLATFORM

Create a building platform to a level surface approximately 330mm below finished floor level. Cut and/or fill sloping sites. Confirm finished floor level.

3.5 POST-CUT INSPECTION

Inspect and confirm that the soil conditions are as anticipated by the geotechnical investigation and report and conform to the requirements of the raft system supplier manual.

3.6 TEMPORARY BUILDING PLATFORM DRAINAGE

Construct suitable drainage to keep excessive ground water off the building platform during and after construction as required.

3.7 HARDFILL

Place hardfill and ensure it is spread and compacted with mechanical compaction.

3.8 UNDERGROUND SERVICES

Ensure underfloor services are installed in the subsoil or hardfill in locations as shown on the drawings and according to the raft floor system manufacturer's requirements.

3.9 BLINDING LAYER

Spread GAP 7 blinding layer to a minimum 500mm past the outside edge of the slab, compact to a level layer no greater than 50mm thick and no higher than 305mm below finished floor level.

3.10 FORMWORK

Construct formwork as required, well braced and tied to remain in position, straight and plumb during construction. Ensure formwork will provide for the topping depth, including rebates and the required concrete finish.

3.11 INSTALL DAMP-PROOF MEMBRANE

Apply DPM to the prepared basecourse extending to the outside of all edge beams or fold and staple up the inside of the formwork. Overlap all joints in the DPM sheets a minimum 150mm. Tape laps and penetrations with 50mm wide pressure sensitive plastic tape. Ensure DPM is not damaged during the construction process. Repair all damage to DPM before proceeding with following procedures.

3.12 PLACE POLYSTYRENE PODS

Place polystyrene pods in a regular waffle pattern using the spacers in the specified grid pattern to fit the floor plan. Cut pods on site with a saw or suitable hot wire as required. Cut holes for services and trim around piles as required on site.

3.13 INSTALL SPACERS

Install spacers and locations to the raft floor system manufacturer's requirements.

Form standard ribs between pods using 100mm spacers. Place the spacers at a minimum of one spacer along each edge of each pod or part pod. The ribs in both directions form a waffle pattern throughout the slab.

Form the edge beam using 300mm spacers. Place the spacers at 1200mm centres maximum along the perimeter of the slab at least and one spacer per pod or part pod.

Form ribs to support load bearing walls using 300mm spacers. Place the spacers at a minimum of one spacer along the edge of each pod or part pod.

3.14 PLACE REINFORCING STEEL: RIB STEEL

Place rib reinforcing steel in the bottom of the internal ribs and supported in the correct position by spacers. Lap all steel 480mm minimum, and hook all plain bars. At the junction with the edge beam, each rib steel bar shall sit on top of the edge beam bars and extend to the outermost bar. Allow for 75mm cover to the edge of the beam. Place 1 x H12 bar in each 100mm wide rib and 2 x H12 bars in each 300mm wide rib.

KDC - Approved Building Consent Document - BC21-608_SP_ISSUED - Pg 114 of 177 - 29/09/2021 - vsingh

3.15 PLACE REINFORCING STEEL: EDGE BEAM STEEL

Place the two edge beam reinforcing bars in the bottom of the edge beam and supported in the correct position by the spacers. Tie one edge beam bar below the mesh at the perimeter of the area covered by the polystyrene pods. Lap all steel 480mm minimum, and hook all plain bars. At corners, the inner bottom bars and the top bars cross each other and extend to 75mm from the outside face of the edge beam. Tie these bars together where they cross. Tying of edge beam steel is only required at corners.

3.16 PLACE REINFORCING STEEL: RE-ENTRANT CORNER STEEL

Place two D10 bars, 1200mm in length across the corner. Tie to the top of the mesh at re-entrant corners at 200mm centres with 50mm side cover from the internal corner.

Install specified steel to raft floor system manufacturer's requirements. Ensure specified minimum cover requirements are maintained.

3.17 PLACE REINFORCING MESH AND CHAIRS

Place reinforcing mesh over the pods and support on the mesh chairs spaced at 1200mm centres minimum, with two mesh chairs minimum placed per pod and with one mesh chair minimum per part pod.

3.18 MESH LAPS

Welded reinforcing mesh to be lapped and tied, such that the outermost wires overlap by the greater of:

- the spacing of the cross wires plus 50mm
- 150mm or
- manufacturer's requirements

Do not count bar extensions beyond the outermost cross wire.

3.19 FORM SLAB AND OPENING REBATES

Form rebates, as detailed on drawings.

Form a minimum 50mm rebate in slab for masonry veneer construction with a width dependent on the veneer width, cavity width and overhang. Waterproof the rebate with a bituminous sealer on both the vertical and horizontal faces.

3.20 TOPPING SLAB DEPTH

85mm minimum plus additional cover as required for infloor heating.

3.21 PRE-PLACEMENT INSPECTION

Arrange for excavations, formwork and reinforcement to be inspected and passed by the Building Consent Authority.

3.22 EQUIPOTENTIAL BONDING REINFORCING

If it is a project requirement, ensure that reinforcing is electrically equipotential bonded (or at least conductor cable attached) before the concrete is poured. For bonded reinforcing ensure all reinforcing is interconnected with good contact at joints and tight conductive ties.

3.23 CONCRETE PLACEMENT AND COMPACTION

Ensure the rib and edge beam canals are clean, free of debris. Pour the floor in a single pour ensuring that the pods remain in position during placing. Pour concrete onto the top of each pod prior to filling the ribs around the pod to help prevent them from floating and lifting.

Compact concrete using a suitable poker vibrator for the ribs and ground beams and into all corners of the formwork. Screed as required. Confirm levels with a laser level.

3.24 CONCRETE FINISHING

Float and trowel to provide a U3 finish to NZS 3114: table 2, Classes of floor, exterior pavement and invert finishes.

3.25 CONCRETE CURING

Curing of the concrete slab must take place immediately after finishing the concrete to NZS 3109 by one of the following curing methods:

- ponding or continuous sprinkling of water
- placing a wet covering or plastic membrane over the slab
- the use of liquid membrane curing compounds

KDC - Approved Building Consent Document - BC21-608_SP_ISSUED - Pg 115 of 177 - 29/09/2021 - vsingh

3.26 SHRINKAGE CONTROL JOINTS

Cut shrinkage control joints as shown on the plans after hardening to a minimum depth of 25mm within 24 hours in summer or 48 hours in winter.

Where shrinkage control joints have not been shown on the plans, position the shrinkage control joints to coincide with major changes in the floor plan. Agree position of shrinkage control joints with the designer.

Bay dimensions formed by the shrinkage control joints to be limited to a maximum ratio of length to width of 2 to 1 with a maximum dimension of 6 metres. Place the shrinkage control joints over the 100mm wide internal ribs wherever possible. Where a shrinkage control joint runs along the line of a 300mm wide loadbearing rib, locate the cut directly above one edge of the 300mm rib. Do not place supplementary reinforcing bars (including re-entrant corner steel) across any shrinkage control joints.

3.27 CLEAN OUT SHRINKAGE CONTROL JOINTS

Clean out control joints. If required fill with suitable flexible sealant.

Finishing

3.28 STRIKE FORMWORK

Strike formwork at least 12 hours after the slab has been finished without damaging or overloading structure.

3.29 SURFACE DEFECTS

Make good surface defects immediately after forms are stripped. Make good hollows or bony areas with suitable patching mortar, finished to the same tolerances as the parent concrete. Fill any tie rod holes with 1:2 mortar.

Completion

3.30 LEAVE

Leave work to the standard required by following procedures.

3.31 CLEAN UP

Clean up surrounding areas following completion of the concrete placement.

3.32 REMOVE

Remove debris, unused materials and elements from the site.

4 SELECTIONS

4.1 DAMP-PROOF MEMBRANE

Type: ~

4.2 POLYSTYRENE PODS

Brand: ~
Size: ~mm x ~mm x ~mm

4.3 SPACERS

Brand: ~
Size: ~mm and ~mm

4.4 CONCRETE SURFACE FINISH

Location: ~
Finish class: U3 (interior)

KDC - Approved Building Consent Document - BC21-608_SP_ISSUED - Pg 116 of 177 - 29/09/2021 - vsingh

3820 CARPENTRY

1 GENERAL

This section relates to the supply and erection of timber framing, as a framed structure, or as partitioning. It includes prefabricated timber and engineered wood.

1.1 RELATED WORK

Refer to 4161 UNDERLAYS, FOIL AND DPC for underlays, foils and DPC.

1.2 DOCUMENTS

Refer to the general section 1233 REFERENCED DOCUMENTS. The following documents are specifically referred to in this section:

NZBC B2/AS1	Durability
AS/NZS 1328.1	Glued laminated structural timber - Performance requirements and minimum production requirements
AS/NZS 1604.1	Preservative-treated wood-based products - Part 1: Products and treatment
NZS 3602	Timber and wood-based products for use in building
NZS 3603	Timber structures standard
NZS 3604	Timber-framed buildings
NZS 3622	Verification of timber properties
NZS 3640	Chemical preservation of round and sawn timber
AS/NZS 4357.0	Structural laminated veneer lumber - Specification
FTMA CoP	Frame and Truss Manufacturers Association Code of Practice

***A copy of NZS 3604 Timber-framed buildings, must be held on site.**

1.3 MANUFACTURER/SUPPLIER DOCUMENTS

1.4 QUALIFICATIONS

Workers to be experienced, competent trades people familiar with the materials and techniques specified.

1.5 DIMENSIONS

All timber sizes except for battens are actual minimum dried sizes.

2 PRODUCTS

2.1 TIMBER FRAMING, TREATED

Species, grade and in service moisture content to NZS 3602, NZBC B2/AS1 and treatment to NZS 3640, NZBC B2/AS1. Structural grade (SG) to NZS 3604, NZS 3622 with properties to NZS 3603.

2.2 WALL DWANGS, NOGS AND BLOCKING

If dwangs, nogs or blocking is required for exterior insulated walls, ensure they are not full depth of framing. Install flush with face of wall required, leaving a minimum 20mm or 45mm preferable gap to the other face to NZS 3604, 8.8. Dwangs and nogs if required to be at 1350mm centres maximum to NZS 3604, 8.8.

2.3 EXTERIOR CAVITY WALL BATTENS - TIMBER - NON-STRUCTURAL

H3.1 or H3.2 Radiata pine battens, minimum 20mm thickness, width and height to match timber framing studs. Temporary fix battens before being fixed into the framing with the cladding fixings. To NZS 3602, table 1, reference 1D.10, Requirements for wood-based building components to achieve a 50-year durability performance.

2.4 EXTERIOR CAVITY WALL BATTENS - PROPRIETARY - NON-STRUCTURAL

Extruded polypropylene battens, size approximately 45mm wide x 18mm thickness. Temporary fix battens before being fixed into the framing with the cladding fixings. To the scope limitations of NZBC E2/AS1, and NZS 3604 Building Wind Zones up to, and including "Extra High".

Components

KDC - Approved Building Consent Document - BC21-608_SP_ISSUED - Pg 117 of 177 - 29/09/2021 - vsingh

2.5 NAILS

Type to NZS 3604, section 4, **Durability**, and of the size and number for each particular types of joint as laid down in the nailing schedules of NZS 3604, sections 6-10.

2.6 SCREWS

Wood screws to the requirements of NZS 3604, 2.4 Fastenings and Fabrication, and section 4, **Durability**, and of the type, number and form required for each screw application to NZS 3604, sections 6 - 10.

2.7 BOLTS AND COACH SCREWS

Bolts and coach screws complete with washers, to the requirements of NZS 3604, clause 2.4.5 Bolts and Coach Screws, and section 4, **Durability**, and of the type, number and form required for each particular junction to NZS 3604, sections 6 - 10.

2.8 NAIL PLATES

Comply with the requirements of NZS 3604, section 4, **Durability**, and of the number and form required for each particular junction to NZS 3604, sections 6 - 10. Plates to the plate manufacturer's design for the particular locations as shown on the drawings.

2.9 CONNECTORS

Comply with the requirements of NZS 3604, section 4, **Durability**, and of the number and form required for each particular junction to NZS 3604, sections 6-10. Connectors and structural brackets to the connector manufacturer's design for particular locations shown on drawings.

2.10 CORROSION RISKS

For interior timber, treated with copper-based timber preservatives (H3.2 or higher), use a minimum of hot-dipped galvanized steel fixings and fasteners.

For exterior timber, timber in damp areas and timber subject to occasional wetting, use only stainless steel (or equivalent) fixings and connectors, when the timber is treated with; Copper Azole (CuAz, Preservative code 58), Alkaline Copper Quaternary (ACQ, Preservative code 90), Micronise Copper Azole (code 88) or Micronised Copper Quaternary (code 89).

2.11 DPC

Refer to 4161 UNDERLAYS, FOIL AND DPC section

3 EXECUTION

3.1 EXECUTION GENERALLY

To NZS 3604 except as varied in this specification. Execution to include those methods, practices and processes contained in the unit standards for the National Certificate in Carpentry and the National Certificate in Joinery (cabinetry, exterior joinery, stairs).

3.2 SEPARATION

Separate all timber framing timbers from concrete, masonry and brick by: -

- a full length bituminous damp-proof membrane overlapping timber by at least 6mm; or
- a 12mm minimum free draining air space

3.3 ATTENDANCE

Provide and fix blocks, nogs, openings and other items as required by other trades.

3.4 MOISTURE CONTENT

Maximum allowable equilibrium moisture content (EMC) for non air-conditioned or centrally heated buildings for framing to which linings are attached.

Framing at erection:	24% maximum
Framing at enclosure:	20% maximum
Framing at lining:	16% maximum

3.5 SET-OUT

Set out framing in accordance with the requirements of NZS 3604 and as required to support sheet linings and claddings. When necessary provide framing to suit any required cladding/lining control joints and sheet joints.

KDC - Approved Building Consent Document - BC21-608_SP_ISSUED - Pg 118 of 177 - 29/09/2021 - vsingh

3.6 FRAMING WALLS

Frame to required loading and bracing complete with lintels, sills and nogs, all fabricated and fastened to NZS 3604, section 8, **Walls**.

3.7 FRAMING ROOFS

Frame to required loading and bracing complete with valley boards, ridge boards and purlins. Design and fit roof trusses complete with anchorage. All fabricated and fastened to NZS 3604, section 9, **Posts** and 10, **Roof framing**.

3.8 FRAMING CEILINGS

Frame to required loading and bracing complete with runners and battens set out to support ceiling lining. All fabricated and fastened to NZS 3604, section 13, **Ceilings**. Trim for openings in ceilings and hatches to NZS 3604 section 13.3, **Openings in ceilings**. Provide blocking for water tanks located in the ceiling space to NZS 3604, section 13.4, **Water tanks in roof space**.

3.9 INSTALLING WALL UNDERLAYS

Refer to 4161 UNDERLAYS, FOIL AND DPC section

3.10 FIT CAVITY BATTENS

Fit and fix 20mm cavity battens over wall underlay or rigid air barrier, fully nail to timber studs to the requirements of the manufacturer or to NZS 3604. Fit and fix related flashings. Make allowance for cladding control joints where required. Fit and fix cavity closers to base of walls, open horizontal (or raking) junctions and over openings (windows, meters etc.).

3.11 DPC TO LOSP TREATED TIMBER

Refer to 4161 UNDERLAYS, FOIL AND DPC section.

3.12 DPC TO TIMBER

Refer to 4161 UNDERLAYS, FOIL AND DPC section.

4 SELECTIONS

4.1 EXTERIOR WALL FRAMING - RADIATA PINE

Member	Species	Grade	Treatment
Exterior walls:	Radiata pine	SG8	H1.2
Parapets:	Radiata pine	SG8	H1.2
Enclosed decks and balconies:	Radiata pine	SG8	H1.2
Cantilevered joists enclosed decks and balconies:	Radiata pine	SG8	H3.2
Nogs	Radiata pine	SG8	H1.2
Wall battens (not cavity):	Radiata pine	Merch	H1.2
Jamb battens:	Radiata Pine	Merch	H3.1

4.2 CAVITY BATTENS

Cavity battens	Species	Grade	Treatment
Timber - Non Structural:	Radiata pine	Merchantable	H3.1
Proprietary - non structural:	Manufacturer ~	Type ~	Reference ~
Cavity closer:	Manufacturer ~	Type ~	Reference ~

4.3 ROOF FRAMING - RADIATA PINE

Member	Species	Grade	Treatment
Rafters:	Radiata pine	SG8	H1.2
Trusses:	Radiata pine	SG8	H1.2
Purlins:	Radiata pine	SG8	H1.2
Ceiling joists and battens:	Radiata pine	SG8	H1.2
Valley boards:	Radiata pine	Merchantable	H1.2
Sarking:	Radiata pine	Merchantable	H1.2
Skillion roof framing:	Radiata pine	SG8	H1.2
Enclosed flat roof framing:	Radiata pine	SG8	H1.2

4.4 INTERIOR FRAMING - RADIATA PINE

Member	Species	Grade	Treatment
Non structural walls:	Radiata pine	SG8	H1.2
Structural and braced walls:	Radiata pine	SG8	H1.2

4.5 SPECIAL FRAMING ELEMENTS

Member	Species	Grade	Treatment
~			

4.6 NAILS

Location	Type	Material	Finish
~			

4.7 SCREWS

Location	Type	Material	Finish
~			

4.8 BOLTS AND COACH SCREWS

Location	Type	Material	Finish
~			

4.9 NAIL PLATES

Location	Type	Material	Finish
~			

4.10 CONNECTORS

Location	Type	Material	Finish
~			

KDC - Approved Building Consent Document - BC21-608_SP_ISSUED - Pg 119 of 177 - 29/09/2021 - vsingh

4161T THERMAKRAFT UNDERLAYS, FOILS, DPC, DPM, & TAPES

1 GENERAL

KDC - Approved Building Consent Document - BC21-608_SP_ISSUED - Pg 120 of 177 - 29/09/2021 - vsingh

This section relates to the application of **Thermakraft Ltd**, DPC, DPM, Wall & Roof Underlays, Foils, Flashing Tapes, and accessories.

1.1 RELATED WORK

Refer to ~ for ~

1.2 ABBREVIATIONS AND DEFINITIONS

Refer to the general section 1232 INTERPRETATION & DEFINITIONS for abbreviations and definitions used throughout the specification.

The following abbreviations apply specifically to this section:

NZMRM	New Zealand Metal Roofing Manufacturers Inc.

The following definitions apply specifically to this section:

Wall underlay	the same meaning as defined in NZBC E2/AS1, covering kraft based and synthetic wall underlays, sometimes called wall wraps, building wraps or building papers.

Documents

1.3 DOCUMENTS

Refer to the general section 1233 REFERENCED DOCUMENTS. The following documents are specifically referred to in this section:

NZBC C/AS2	Protection from fire
NZBC E2/AS1	External moisture
AS 1530.2	Methods for fire tests on building materials, components and structures - Test for flammability of materials
NZS 2295	Pliable, permeable building underlays
AS/NZS 2904	Damp-proof courses and flashings
NZS 3604	Timber-framed buildings
NZS 4214	Methods of determining the total thermal resistance of parts of buildings
AS/NZS 4389	Roof safety mesh
AS/NZS 4534	Zinc and zinc/aluminium-alloy coatings on steel wire
NZMRM CoP	NZ Metal Roof and Wall Cladding Code of Practice

KDC - Approved Building Consent Document - BC21-608_SP_ISSUED - Pg 121 of 177 - 29/09/2021 - vsingh

1.4 MANUFACTURER/SUPPLIER DOCUMENTS

Thermakraft documents relating to work in this section are:
Thermakraft product manual and technical data sheets.
BRANZ Appraisal 329 - Supercourse 500™ Damp-Proof Course and Concealed Flashing
BRANZ Appraisal 611 - James Hardie Rigid Air Barriers
BRANZ Appraisal 651 - Thermakraft Covertek™ 407 Roof and Wall Underlay
BRANZ Appraisal 695 - Watergate Plus™ Wall Underlay
BRANZ Appraisal 743 - Thermakraft Covertek 405™ Roof and Wall Underlay
BRANZ Appraisal 878 - Thermakraft Aluband™ Window Flashing Tape
BRANZ Appraisal 912 - Thermakraft 220™ Synthetic Wall Underlay
BRANZ Appraisal 917 - Thermakraft Covertek 403™ Roof and Wall Underlay
BRANZ Appraisal 942 - OneSeal™ Multi-Fit Pipe and Cable Penetration Seals
BRANZ Appraisal 943 - Thermakraft Covertek 401™ Roof Underlay
BRANZ Appraisal 962 - The Thermakraft One Wrap System™
BRANZ Appraisal 1000 - Thermakraft Thermabar 397™ Light Diffusing Reflective Underlay
BRANZ Appraisal 1029 - Thermakraft Ausnet™ Hexagonal Wire Mesh
BRANZ Appraisal 1104 – Thermathene Orange™ Concrete Underlay
BRANZ Appraisal 1122 – Thermaflash™ Flashing Tape

Code Mark Certificate 30069 - Thermakraft Covertek 403™ Absorbent Breathable Roof Underlay
Code Mark Certificate 30030 - Thermakraft Covertek 405™ Absorbent Breathable Roof Underlay
Code Mark Certificate 30028 - Thermakraft Covertek 407™ Absorbent Breathable Roof Underlay
Code Mark Certificate 1002 - Thermakraft Watergate Plus™ Wall Underlay

Manufacturer/supplier contact details

Company:	Thermakraft Ltd
Web:	www.thermakraft.co.nz
Email:	info@thermakraft.co.nz
Telephone:	0800 806 595

Warranties

1.5 WARRANTY - MANUFACTURER/SUPPLIER

Warrant this work under normal environmental and use conditions against failure of materials and execution. Thermakraft Ltd warrant performance of products if design and installation comply with relevant technical literature, NZBC, and recognised industry Codes of Practice. Copy of Thermakraft ™ Product Warranty available on request.

Requirements

1.6 INSTALLATION SKILL LEVELS

Installers to be experienced in the installation of Thermakraft ™ products and familiar with Thermakraft ™ technical literature and the related documents listed in this design i.e. NZMRM CoP NZ Metal Roof and Wall Cladding Code of Practice.

1.7 QUALIFICATIONS WORKERS - LICENSED UNDER STATUTE

Workers and supervisors to be appropriately qualified to applicable legislative requirements. Refer to 1270 CONSTRUCTION for additional requirements relating to qualifications.

1.8 NO SUBSTITUTIONS

Substitutions are not permitted to any specified materials, or associated products, components or accessories.

Compliance information

1.9 INFORMATION REQUIRED FOR CODE COMPLIANCE

Provide the following compliance documentation:

- Applicators approval certificate from the manufacturer / importer / distributor
- Manufacturer / supplier warranty
- Installer / applicator warranty
- Producer Statement - Construction from the applicator / installer
- Producer Statement - Construction Review from an acceptable suitably qualified person
- Other information required by the BCA in the Building Consent Approval documents.

KDC - Approved Building Consent Document - BC21-608_SP_ISSUED - Pg 122 of 177 - 29/09/2021 - vsingh

Performance - general

1.10 SURFACE FIRE PROPERTIES FOR LININGS

Group Number to NZBC C/AS2, Table 4.3. Refer to SELECTIONS.

Quality control and assurance

1.11 INSPECTIONS

~

2 PRODUCTS

Materials

Damp Proof Course

2.1 SUPERCOURSE 500™ DPC

Supercourse 500™, high-impact polyethylene film to AS/NZS 2904 and embossed on both sides. Thickness 500 microns minimum, manufactured for use as a damp-proof course and concealed flashings around doors and windows and to BRANZ Appraisal 329. Refer to SELECTIONS for type of joining tape.

Damp Proof Membrane

2.2 THERMATHENE BLACK™ DPM (MEDIUM DUTY)

Thermathene Black™, a minimum of 250 microns polyethylene film. Complies with NZS 3604, 7.5.4, Damp-proof membrane, to NZBC E2/AS1. Refer to SELECTIONS for type of joining tape.

Wall underlays

Wall underlays - synthetic, fire-retardant, air barriers

2.3 WATERGATE PLUS ™ SYNTHETIC WALL UNDERLAY

Watergate Plus™, specifically designed as a wall underlay. Absorbent breathable spun bonded non-woven polyolefin type building membrane, coated with a water resistant vapour permeable film. A fire retardant membrane, with Flammability Index of ≤ 5, when tested to AS 1530.2. The product has a BRANZ Appraisal 695, and is included in the Thermakraft One Wrap System™ BRANZ Appraisal 962.

Roof underlays

Roof underlays - bituminous, self-supporting

2.4 THERMAKRAFT 215™ BITUMINOUS ROOF UNDERLAY

Thermakraft 215™, bituminous self-supporting roof underlay to NZS 2295.

Window and joinery flashing tape

2.5 ALUBAND™ BITUMINOUS FLASHING TAPE

Thermakraft Aluband™ window flashing tape consists of synthetic faced reinforced bituminous window sealing tape, in widths of 75mm, 150mm and 200mm. Used to repair damaged bituminous underlays. Bitumen may react to sealants, always check compatibility. Thermakraft Corner Moulds must be used. Exposure 42 days. Install from 5°C. BRANZ Appraisal 878, and is included in the Thermakraft One Wrap System™ BRANZ Appraisal 962.

Joining tape

2.6 WHITE GENERAL PURPOSE TAPE™

Thermakraft White General Purpose Tape™ is a medium duty acrylic tape is commonly used on synthetic underlays, damp proof and for sealing edges of vapour control layers. NOT to be used as a flashing tape. Suitable for joining and sealing underlays, foils and membranes.

Accessories

2.7 STUDSTRAP™ HEAVY DUTY STUD STRAP

Thermakraft StudStrap™, 25mm wide black polythene strap. Heavy duty, offering greater resistance to splitting.

KDC - Approved Building Consent Document - BC21-608_SP_ISSUED - Pg 123 of 177 - 29/09/2021 - vsingh

3 EXECUTION

Conditions

3.1 DELIVERY, STORAGE & HANDLING OF PRODUCTS

Refer to 1270 CONSTRUCTION for requirements relating to delivery, storage and handling of products.

3.2 ROUTINE MATTERS

Refer to 1250 TEMPORARY WORKS & SERVICES for protection requirements.
Refer to 1270 CONSTRUCTION for requirements relating to defective or damaged work, removal of protection and cleaning.

3.3 PRE-INSTALLATION REQUIREMENTS

Check work previously carried out and confirm it is of the required standard for this part of the work.
Carry out remedial work identified before laying underlay.
Moisture content: ~% maximum

3.4 GENERAL REQUIREMENTS

Design application and installation of Thermakraft Building products to NZBC E2/AS1, BRANZ Appraisals, Thermakraft Technical Literature and Industry Codes of Practice.

Application generally

3.5 STANDARDS AND TOLERANCES

Refer to the general section 1270 CONSTRUCTION for general requirements.

Application DPC

3.6 DPC TO LOSP/CCA TREATED TIMBER

Lay Supercourse 500™ DPC under LOSP or CCA treated bottom plate of all timber framed walls on concrete, in a single layer with 50mm overlaps at joints to provide a waterproof barrier.

3.7 DPC TO TIMBER / STEEL

Lay Supercourse 500™ under the bottom plate of all timber / steel framed walls on concrete, in a single layer with 50mm overlaps at joints to provide a waterproof barrier.
Refer to SELECTIONS for type.

3.8 DPC TO MASONRY AND BRICK VENEER

Lay Supercourse 500™ along based of cavity and fix top edge to studs with galvanized clouts. Turn DPC out over concrete rebate under bottom course of veneer.

Application - DPM

3.9 DPM TO CONCRETE FLOOR

Lay DPM under concrete floor substrate over sand blinding, in a single layer with 150mm overlaps at joints to provide a waterproof barrier. Refer to SELECTIONS for type. Tape all joints and penetrations with Thermakraft ™White General Purpose Tape™ 60mm.

Application - wall underlay

3.10 WALL UNDERLAY

Fix horizontally to outside face of framing in true alignment, with succeeding sheets overlapping 150mm to NZBC E2/AS1, 9.1.7, Wall underlay, and refer to Thermakraft for requirement for fastenings. Fix to Thermakraft Technical Data specifications. Scribe neatly around penetrations and openings to leave no gaps. Flash all openings and tape all penetrations in accordance with Thermakraft Installation Guides. Keep clean, undamaged and without visible weather deterioration until closed in.

KDC - Approved Building Consent Document - BC21-608_SP_ISSUED - Pg 124 of 177 - 29/09/2021 - vsingh

3.11 INSTALL STUD STRAPS

Over underlay, install stud straps horizontally at 300mm centres, draw taut and fix to studs with stainless steel staples.

3.12 METAL CLADDING ON TIMBER CAVITY BATTENS

Fix strip of DPC Thermakraft Supercourse 500 ™ as a separator between the timber and metal cladding.

Application - roof underlay

3.13 ROOF UNDERLAY

Lay vertically over purlins on wire netting with a 150mm side lap. Fix securely to purlins with galvanized fixings. Lay underlay to avoid excessive dishing between purlins. When used vertically, limit individual runs to 10 metres for bituminous underlays. Do not lay vertically on roof pitches under 10° without support.

Horizontally lay across the rafter/trusses starting at the gutter line with succeeding sheets in true alignment and lapping 150mm. Scribe around and fit neatly to all penetrations and avoid prolonged exposure by installing the roof immediately.

Completion

3.14 COMPLETION MATTERS

Refer to 1270 CONSTRUCTION for completion requirements and if required commissioning requirements.

4 SELECTIONS

For further details on selections go to www.thermakraft.co.nz.
Substitutions are not permitted to the following, unless stated otherwise.

Performance

4.1 SURFACE FIRE PROPERTIES

Group Number	Panel/Finish	Location
~	~	~

Damp Proof Course

4.2 THERMAKRAFT SUPERCOURSE 500™ DPC

Location: ~
Type: Supercourse 500™
Joining tape: ~

Damp Proof Membrane

4.3 THERMAKRAFT THERMATHENE BLACK™ DPM

Location: ~
Type: Thermathene Black™
Joining tape: ~

Wall underlays - synthetic, fire-retardant, air barriers

4.4 THERMAKRAFT WATERGATE PLUS™ WALL UNDERLAY

Location: ~
Type: Thermakraft Watergate Plus™
Joining tape: ~
Flashing tape: ~
Accessories: ~

Roof underlays - bituminous, self-supporting

KDC - Approved Building Consent Document - BC21-608_SP_ISSUED - Pg 125 of 177 - 29/09/2021 - vsingh

4.5 THERMAKRAFT 215™ BITUMINOUS ROOF UNDERLAY

Location:	~
Type:	Thermakraft 215™
Joining tape:	~
Flashing tape:	~
Accessories:	~

Window and joinery flashing tape

4.6 THERMAKRAFT ALUBAND™ FLASHING TAPE

Location:	~
Sill/head tape:	150mm Thermakraft Aluband™ (for 90mm framing) 200mm Thermakraft Aluband™ (for 140mm or 150mm framing)
Sill corners:	Thermakraft Corner Mould™
Head corners:	75mm Thermakraft Aluband™ butterfly corners

Joining tape

4.7 THERMAKRAFT WHITE GENERAL PURPOSE TAPE™

Location:	~
Joining tape:	60mm Thermakraft White General Purpose Tape™

Stud straps

4.8 THERMAKRAFT STUDSTRAP™ STUD STRAPS

Location:	~
Type:	Thermakraft Studstrap, 25mm black polythene woven tape

KDC - Approved Building Consent Document - BC21-608_SP_ISSUED - Pg 126 of 177 - 29/09/2021 - vsingh

4223SC SHADOWCLAD® PLYWOOD CLADDING

1 GENERAL

This section relates to the use of Carter Holt Harvey Plywood Ltd (CHH PLY) Shadowclad® range of plywood exterior cladding on a drained cavity.
It includes:

- Shadowclad® Natural Texture
- Shadowclad® Natural Groove
- Shadowclad® Ultra Texture
- Shadowclad® Ultra Groove

1.1 RELATED WORK

Refer to the appropriate timber framing section for timber framing.
Refer to the appropriate painting section for applied finishes.

1.2 ABBREVIATIONS AND DEFINITIONS

Refer to the general section 1232 INTERPRETATION & DEFINITIONS for abbreviations and definitions used throughout the specification.

The following abbreviations apply specifically to this section:

FSC®	Forest Stewardship Council®
COC	Chain of Custody

Documents

1.3 DOCUMENTS

Refer to the general section 1233 REFERENCED DOCUMENTS. The following documents are specifically referred to in this section:

NZBC E2/AS1	External moisture
AS/NZS 1604.1	Preservative-treated wood-based products - Part 1: Products and treatment
AS/NZS 2269.0	Plywood - Structural - Specifications
NZS 3602	Timber and wood-based products for use in building
NZS 3604	Timber-framed buildings

Window & Glass Association NZ (WGANZ) documents:

Window Installation Guide	Guide to Window Installation as described in E2/AS1 Amendment 7

Documents listed above and cited in the clauses that follow are part of this specification. However, this specification takes precedence in the event of it being at variance with the cited document.

1.4 MANUFACTURER'S DOCUMENTS

Carter Holt Harvey Plywood Ltd documents relating to work in this section are:
Shadowclad® sITe APP
Shadowclad® Specification and Installation Guide for Cavity Construction (May 2018)
Shadowclad® Specification & Installation Guide For Mixed Cladding Systems On Cavity Construction (May 2018)
Shadowclad® Safety Data Sheets (May 2018)
BRANZ Appraisal 764 - Shadowclad® Ventilated Cavity Cladding System
FSC Certification available on request for W8.1 Plywood FSC Mix
CHH Tokoroa FSC-C012019 SCS-COC-001316 Controlled Wood SCS-CW-001316 - expires 5 June 2023

Copies of the above literature are available at

Web:	www.shadowclad.co.nz
Telephone:	0800 326 759

Requirements

KDC - Approved Building Consent Document - BC21-608_SP_ISSUED - Pg 127 of 177 - 29/09/2021 - vsingh

1.5 QUALIFICATIONS

Workers to be experienced, competent trades people familiar with the materials and techniques specified.

1.6 NO SUBSTITUTIONS

Substitutions are not permitted to any of the specified systems, components and associated products listed in this section.

1.7 INFORMATION FOR OPERATION AND MAINTENANCE

Refer to the general section 1234 DOCUMENTATION for provision of the following general operation and maintenance information as electronic PDF format documents:
Shadowclad® Specification and Installation Guide for Cavity Construction.

Performance

1.8 APPRAISED

Shadowclad® Ventilated Cavity Cladding Systems is BRANZ Appraised (BRANZ Appraisal 764) with scope limitations. Shadowclad® Ventilated Cavity details were tested to E2/VM1 as part of the technical investigations carried out.

1.9 PERFORMANCE

Accept responsibility for the weather-tight performance of the completed cladding system, including all penetrations.

2 PRODUCTS

Materials

2.1 SHADOWCLAD® ULTRA TEXTURE CLADDING

Radiata pine veneer 12mm (nom) ply sheet to AS/NZS 2269.0. Treated LOSP Azole H3.1 or CCA H3.2 to AS/NZS 1604.1. Pre-primed bandsawn surface finish and vertical ship lap joint. Standard sheet cover width is 1200mm. Standard sheet lengths are 2440mm and 2745mm.

2.2 WALL UNDERLAYS

For flexible wall underlays, rigid wall underlays and rigid air barriers, refer to the appropriate separate section(s).

2.3 EXTERIOR CAVITY WALL BATTENS

Radiata pine battens, nominal 20mm thick, 45mm wide and height to match timber framing studs. To NZS 3602, table 1, reference 1D.10.
Refer **Shadowclad**® Specification and Installation Guide for Cavity Construction.

2.4 EXTERIOR CAVITY CLOSER/VERMIN-PROOFING

Shadowclad® cavity base closure with upstand to two sides and 5mm diameter holes at 15mm centres to base. Available in aluminium (natural anodised) and stainless steel. Refer **Shadowclad**® Specification and Installation Guide for Cavity Construction. To NZBC E2/AS1: Vermin-proofing clause 9.1.8.3 and Cavity base closer figure 66.

2.5 EXTERIOR COVER BATTENS & TRIM

Radiata pine battens, trim and covers to profiles as required by the cladding manufacturer. Clears grade or finger-jointed, treated H3.1.

- cover battens minimum 65mm x 18mm with 6mm x 6mm weather grooves
- internal corner/soffit battens 18mm x 18mm with back corner chamfered

Refer **Shadowclad**® Specification and Installation Guide for Cavity Construction.

Components

2.6 NAILS

Refer to the **Shadowclad**® Specification and Installation Guide for Cavity Construction fixing requirements for size and use. Refer to SELECTIONS for material and type.

- Minimum 60mm x 2.8mm. (hand driven)

When using rigid air barriers, increase fixing length by at least the thickness of that panel. Refer to power tool manufacturers for equivalent power driven nail size.

2.7 SCREWS

Refer to the **Shadowclad**® Specification and Installation Guide for Cavity Construction fixing requirements for size and use. Refer to SELECTIONS for material and type.

- Minimum No. 8 x 65mm countersunk screws.

When using rigid air barriers, increase fixing length by at least the thickness of that panel.

2.8 FLASHINGS

Shadowclad® flashing range either; aluminium mill finish or anodised, or G304 stainless steel. Note, lengths and finish do vary for aluminium profiles, but stainless steel profiles are all 3000mm long.
To NZBC E2/AS1, Table 20 **Material Selection**. Refer to the **Shadowclad**® Specification and Installation Guide for Cavity Construction.

2.9 FLASHING TAPE

Flexible flashing tape to NZBC E2/AS1, 4.3.11 Flexible flashing tape, UV resistant for exposed applications.

Accessories

2.10 SEALANT

Refer to the plywood manufacturer's requirements for elastomeric sealant to waterproof penetrations.

2.11 TREATMENT OF SHEET CUTS

Soudal Metalex Ready to Use, clear colour product.

3 EXECUTION

Conditions

3.1 DELIVERY, STORAGE & HANDLING OF PRODUCTS

Refer to 1270 CONSTRUCTION for requirements relating to delivery, storage and handling of products.

3.2 ROUTINE MATTERS

Refer to 1250 TEMPORARY WORKS & SERVICES for protection requirements. Refer to 1270 CONSTRUCTION for requirements relating to defective or damaged work, removal of protection and cleaning.

3.3 TIMBER FRAMING

Ensure it is to NZS 3604 and the manufacturer's requirements.

3.4 SUPPORT

Fully support all edges and joints.

3.5 VERTICAL JOINT EXPANSION - SHADOWCLAD® TEXTURE

Provide 2-3mm gap at all vertical edges of cladding for sheet expansion.
Maintain 2mm minimum expansion gap in the vertical shiplap joint to create an adequate expansion allowance. Refer **Shadowclad**® Specification and Installation Guide for Cavity Construction

3.6 HORIZONTAL JOINT EXPANSION - SHADOWCLAD® 'Z' FLASHING

For horizontal joints using **Shadowclad**® 'Z' flashings, provide a horizontal 9mm gap between the 'Z' flashing and the sheet above at the outside face to create an adequate expansion allowance. Refer **Shadowclad**® Specification and Installation Guide for Cavity Construction.

3.7 FRAMING MOISTURE CONTENT

Maximum moisture content 20% to NZS 3602. for general framing and cavity battens

Application

KDC - Approved Building Consent Document - BC21-608_SP_ISSUED - Pg 128 of 177 - 29/09/2021 - vsingh

KDC - Approved Building Consent Document - BC21-608_SP_ISSUED - Pg 129 of 177 - 29/09/2021 - vsingh

3.8 DRAINED CAVITY - 600 STUD SPACING

Confirm that drained cavity is installed as follows with 600mm stud spacing and 800mm max nog spacing, or 600mm max nog spacing when using vertical cover battens.
20mm nominal thickness drained cavity to NZBC E2/AS1: 9.0 **Wall claddings**, with battens over underlay or rigid air barrier. Vertical cavity battens fixed at 300 centres, battens to each stud and one in between the two studs fixed to top and bottom plates and nogs. Do not fix the cladding to the battens fixed between studs as it is only to restrain the building underlay and insulation from bulging into the drained cavity. Top of the cavity is to be sealed. Cavity closer/vermin proofing should be used at the base of walls, open horizontal (or raking) junctions, over openings (windows, meters etc). Horizontal cavity battens should not be used except when closing off the top of a cavity from all roof spaces and enclosed soffits to prevent entry of moist air.
Cavity spacers (i.e. short pieces of cavity batten) may be used to support the bottom sheet edge (or provide intermediate support where required eg above window openings) but must allow water drainage to the outside. The cavity spacers must be fixed at a 5˚ minimum slope (to horizontal) with a 50mm minimum air gap at either side.
Refer **Shadowclad**® Specification and Installation Guide for Cavity Construction.

3.9 PENETRATIONS

Confirm that exterior wall openings have been prepared ready for the installation of all window and door frames and other penetrations through the cladding. Required preparatory work includes the following:

- wall/cladding underlay to openings finished and dressed off ready for the installation of window and door frames and other penetrations
- claddings neatly finished off to all sides of openings
- installation of flashings (those required to be installed prior to installation of penetrating elements).

Refer to the WGANZ Window Installation Guide. This covers the WGANZ recommendations on the preparation of window/door openings, minimum clearances between rough openings and the window/door frame, dressing of the wall underlay into the prepared opening, application of flexible flashing tape to the sill and top corners of the opening, installation of window/door frames and flashings, sealing of the window/door frame into the opening to create a pressure equalisation cavity, installation of flashings and the maintenance of appropriate clearances between the frame and the surrounding construction.

3.10 TREATING CUT EDGES

Treat cut edges of plywood with Soudal Metalex Ready to Use to Soudal requirements, before fixing. Cut edges must be placed at the top of the sheet to avoid rain drips soaking in to cut end grain.

3.11 PRIMING EDGES & REAR OF SHEET

Before installation prime the bottom edges and back (rear) of sheets to a height of 150mm. Refer **Shadowclad**® Specification and Installation Guide for Cavity Construction.

3.12 PRE-PAINTING OR STAINING

Before installation pre-paint or pre-stain as appropriate, up to one finishing coat on exposed edges and surfaces that will be difficult to paint after installation. Refer to Metalex Ready to Use datasheet for specific requirements.

3.13 INSTALL SHADOWCLAD® PLYWOOD CLADDING

Install to the requirements of **Shadowclad**® Specification and Installation Guide for Cavity Construction. Ensure sheets are installed vertically, do not install horizontally. Use a Shadowclad Stick to determine required clearances.

3.14 FIXING SHADOWCLAD® PLYWOOD CLADDING

Fix at 150mm maximum centres at sheet edges and no closer than 7mm to the sheet edge. Fix intermediate supports at 300mm maximum centres to studs and nogs. Sheets to be nailed off independently of each other, with nailing pattern and ship lap joint nailing to detailed requirements of **Shadowclad**® Specification and Installation Guide for Cavity Construction (in particular refer details SC003, SC006, SC006A, SC008, SC008A). Do not fix through grooves.
Finish fixings flush.
Refer **Shadowclad**® Specification and Installation Guide for Cavity Construction.

3.15 INSTALL COVER BATTENS AND TRIMS

Install as detailed on the drawings and in accordance with the cladding manufacturer's requirements.
Refer **Shadowclad**® Specification and Installation Guide for Cavity Construction.

KDC - Approved Building Consent Document - BC21-608_SP_ISSUED - Pg 130 of 177 - 29/09/2021 - vsingh

3.16 INSTALLING FLASHINGS GENERALLY

Install flashings and covers as detailed on the drawings and in accordance with **Shadowclad**® recommended details. Refer **Shadowclad**® Specification and Installation Guide for Cavity Construction.

3.17 INSTALLING SHADOWCLAD® 'Z' FLASHINGS - CONTINUOUS CAVITY

Install **Shadowclad**® standard Horizontal 'Z' flashing with the upstand over the cavity battens to **Shadowclad**® recommended details and as detailed on the drawings. Refer **Shadowclad**® Specification and Installation Guide for Cavity Construction.

3.18 INSTALLING SHADOWCLAD® 'Z' FLASHINGS - N0N-CONTINUOUS CAVITY

Install **Shadowclad**® Inter-Storey 'Z' flashing with the upstand under the cavity battens along with **Shadowclad**® Cavity Base Closure, to **Shadowclad**® recommended details and as detailed on the drawings.
Refer **Shadowclad**® Specification and Installation Guide for Cavity Construction.

3.19 JOINTING & TERMINATING SHADOWCLAD® 'Z' FLASHINGS

Horizontal 'Z' flashings shall be jointed as follows:

- Butt jointed over back flashing for aluminium flashings
- Overlapped by 150mm for stainless steel flashings

Horizontal 'Z' flashings shall have ends terminated as follows:

- 50 mm strip of neutral cure silicon or
- Stop ends
- End terminations not required butting into Shadowclad® metal corner flashings.

Refer **Shadowclad**® Specification and Installation Guide for Cavity Construction.

3.20 COMPLETE

Ensure the work is complete with all flashings, finishings and trim properly installed so the cladding system is completely weathertight.

Completion & Commissioning

3.21 COMPLETION MATTERS

Refer to 1270 CONSTRUCTION for completion requirements and if required commissioning requirements.

3.22 COMPLETION - TESTS & CERTIFICATION

Refer to 1270 CONSTRUCTION for general test and certification requirements at completion.
~

4 SELECTIONS

For further details on selections go to: www.shadowclad.co.nz
Substitutions are not permitted to the following, unless stated otherwise.

4.1 SHADOWCLAD® ULTRA TEXTURE PLYWOOD CLADDING

Cladding type:	Shadowclad® Ultra Texture
Treatment:	H3.2 CCA
Finish:	Paint
Prime:	~ for exposed edges (refer to appropriate painting section)
Thickness:	12mm (nominal)

4.2 CAVITY BATTENS

Timber species:	Radiata pine
Timber grade:	Merchantable
Treatment:	H3.1

Refer **Shadowclad**® Specification and Installation Guide for Cavity Construction.

KDC - Approved Building Consent Document - BC21-608_SP_ISSUED - Pg 131 of 177 - 29/09/2021 - vsingh

4.3 SHADOWCLAD® FLASHINGS - ALUMINIUM

Refer **Shadowclad**® Specification and Installation Guide for Cavity Construction.

Location	Flashing	Finish
Cavity base:	Cavity Base Closure	Natural Anodised (only)
Horizontal joints:	Horizontal Z Back	Mill (only)
Horizontal joints:	Horizontal Z	~
Inter storey junction:	Inter-Storey Z Back	Mill (only)
Inter storey junction:	Inter-Storey Z	~
Internal angle:	Internal 90 Angle	Natural Anodised (only)
Internal angle	Internal W Angle	~
Internal angle	Large Internal W Angle	~
External angle:	External Box Angle	~
External angle:	Large External Box Angle	~
Vertical details	Vertical Top Hat	~

Note: If powder coating is required, contractor to organise coating separately (not by Carter Holt Harvey Plywood Ltd)

Fixings	Size	Material
Flat head nail	40mm x 2.5mm	Galvanized

4.4 SHADOWCLAD® FLASHINGS - STAINLESS STEEL

Refer **Shadowclad**® Specification and Installation Guide for Cavity Construction.

Location	Flashing
Cavity base:	Cavity Base Closure
Horizontal joints:	Horizontal Z
Inter storey junction:	Inter-Storey Z
Internal angle:	Internal 90 Angle
Internal angle	Internal W Angle
External angle:	External Box Angle

Fixings	Size	Material
Flat head nail	40mm x 2.5mm	Stainless Steel

4.5 FASTENINGS FOR CLADDING - GALVANIZED

Location: ~
Type/size: ~
Material: Galvanized
Note: Use with H3.1 treated timber and aluminium flashings only, increase length of fixing if rigid air barriers are used. Do not use with Stainless Steel flashings or H3.2 timber.
Refer **Shadowclad**® Specification and Installation Guide for Cavity Construction.

4.6 FASTENINGS FOR CLADDING - STAINLESS STEEL

Location: ~
Type/size: ~
Material: Stainless Steel
Note: Must be used with H3.2 treated timber and/or Stainless steel flashings only, increase length of fixing if rigid air barriers are used. Do not use with aluminium flashings.
Refer **Shadowclad**® Specification and Installation Guide for Cavity Construction.

4.7 COVER BATTENS AND TRIMS

Location	Material	Size	Finish
~	~	~	~ to match cladding

Finishing

4.8 PAINTING

Refer to the appropriate painting section(s).
Panels are to be Brush coated within 3 months of installation, over 3 months ensure panels are prepare to **Shadowclad**® Specification and Installation Guide for Cavity Construction, Section 5.0.
For paint and film forming stains ensure cover is at least 90 microns (Min 30 microns/coat). For penetrating stains follow stain manufacturer's requirements.
Refer **Shadowclad**® Specification and Installation Guide for Cavity Construction.

KDC - Approved Building Consent Document - BC21-608_SP_ISSUED - Pg 132 of 177 - 29/09/2021 - vsingh

4311RI ROOFING INDUSTRIES PROFILED METAL ROOFING

1 GENERAL

KDC - Approved Building Consent Document - BC21-608_SP_ISSUED - Pg 133 of 177 - 29/09/2021 - vsingh

This section relates to the supply and fixing of **Roofing Industries** profiled roofing complete with accessories.

1.1

1.2 ABBREVIATIONS

The following abbreviations are used throughout this part of the specification:

BMT	Base metal thickness
NZMRM	New Zealand Metal Roofing Manufacturers Inc
MS	Modified silicone
LBP	Licensed Building Practitioner

Documents

1.3 DOCUMENTS

Refer to the general section 1233 REFERENCED DOCUMENTS.
The following documents are specifically referred to in this section:

NZBC E2/AS1	External Moisture
NZBC G12/AS1	Water Supplies
AS/NZS 1170.2:2011	Structural design actions - Wind actions
AS/NZS 1665	Welding of aluminium structures
AS/NZS 1734	Aluminium and aluminium alloys - flat sheet, coiled sheet and plate
AS/NZS 1554.6	Welding stainless steels for structural purposes
ISO/TS 15510	Stainless steels - Chemical composition
AS 1397	Continuous hot-dip metallic coated steel sheet and strip - Coatings of zinc and zinc alloyed with aluminium and magnesium
AS 3566	Self-drilling screws for the building and construction industries
NZS 3604	Timber-framed buildings
ISO 9223	Corrosion of metals and alloys - Corrosivity of atmosphere - Classification determination and estimation
NZMRM CoP	NZ Metal Roof and Wall Cladding Code of Practice

Documents listed above and cited in the clauses that follow are part of this specification. However, this specification takes precedence in the event of it being at variance with the cited document.

1.4 MANUFACTURER/SUPPLIER DOCUMENTS

Manufacturer's and supplier's documents relating to this part of the work:
Roofing Industries product literature including:

- Profile Technical Summary
- Selection Guide

Copies of the above literature are available from Roofing Industries product list.

Web:	www.roof.co.nz
Email:	techinfo@roof.co.nz
Telephone:	0800 844 822

Warranties

1.5 WARRANTY - MANUFACTURER/SUPPLIER

Provide a material manufacturer/supplier warranty:

- Provide this warranty on the Coil Manufacturers/Roofing Industries products standard Warranty Form
- Commence the warranty from the date of practical completion of the contract works

Refer to the general section 1237 WARRANTIES for additional requirements.

KDC - Approved Building Consent Document - BC21-608_SP_ISSUED - Pg 134 of 177 - 29/09/2021 - vsingh

1.6 WARRANTY - INSTALLER/APPLICATOR

Provide an installer/applicator warranty:
5 years for workmanship

- Provide this warranty on the metal roofing installers standard warranty form.
- Commence the warranty from the date of practical completion of the contract works.

NOTE: Include a copy of the Roofing Industries maintenance requirements with the warranty. Refer to the general section 1237 WARRANTIES for additional requirements.

Requirements

1.7 QUALIFICATIONS

Roof Installers shall be experienced, competent roofers familiar with **Roofing Industries** products. And for Restricted Building Work shall also be, an LBP or supervised by an LBP.

Carry out work with experienced, competent installers familiar with the products being used and preferably with appropriate qualifications such as the National Certificate in Metal Roofing and Cladding.

1.8 NO SUBSTITUTIONS

Substitutions are not permitted to any specified system, or associated components and products.

Performance - Wind

1.9 DESIGN PARAMETERS - NON SPECIFIC DESIGN

Building wind zone High
Refer to **Roofing Industries** for "Wind Load Span Design Graphs" for load parameters.

1.10 FIXINGS, WIND

Design and use the fixings/fixing pattern appropriate for the wind design parameters and NZMRM CoP. Refer to **Roofing Industries** Profile Technical Summary for the selected profile. Allow for specific loadings at corners and the periphery of the roof, where localised pressure factors apply. Fixing pattern to also take into account fixing method and purlin spacings.

Performance - General

1.11 PERFORMANCE

Install roofing materials in accordance with the NZMRM CoP, and **Roofing Industries** Profile Technical Summary for the selected profile, to form a weather-tight performance for the completed roofing system, including all penetrations through the roof and junctions with walls and parapets.

1.12 DRINKING WATER

Roofing for collecting potable water to NZBC G12/AS1.

1.13 CO-ORDINATE

Co-ordinate to ensure substrate and preparatory work is complete and other work programmed in the order required for access and completion of the roof. Ensure that all necessary members are positioned so that flashings can be fastened at both edges through the roof profile or cladding to the primary structure.

2 PRODUCTS

2.1 STEEL - GALVANIZED, UNPAINTED

Formability steel sheet, G550 for roll forming or G300 for flashings, coated to AS 1397.

2.2 STEEL - HOT-DIPPED ALUMINIUM/ZINC ALLOY COATED, UNPAINTED

Formability steel sheet, G550 for roll forming or G300 for flashings, coated to AS 1397.

2.3 STEEL - HOT-DIPPED ALUMINIUM/ZINC ALLOY COATED, PRE-FINISHED

Formability steel sheet, G550 for roll forming or G300 for flashings, coated to AS 1397.

2.4 STEEL - HOT-DIPPED ALUMINIUM/ZINC/MAGNESIUM COATED, UNPAINTED

Formability steel sheet, G550 for roll forming or G300 for flashings, coated to AS 1397.

2.5 STEEL - HOT-DIPPED ALUMINIUM/ZINC/MAGNESIUM COATED, PRE-FINISHED

Formability steel sheet, G550 for roll forming or G300 for flashings, coated to AS 1397.

2.6 STAINLESS STEEL

Stainless steel sheet manufactured to ASTM A240 and ASTM A480. Welding to AS/NZS 1554.6.

2.7 ALUMINIUM

Aluminium alloy series 5000 temper H34 for flashings or H36 for roll forming to suit application.

2.8 ALUMINIUM, PRE-FINISHED

Aluminium alloy series 5000 temper H34 for flashings or H36 for roll forming to suit application coated to AS/NZS 2728.

2.9 FASTENERS GENERALLY

Fixings and fasteners are to be compatible with all materials, the environment and meeting the requirements of the NZ Building Code. Installation is to be in accordance with E2/AS1 and/or the NZMRM CoP and Roofing Industries Profile Technical Summary.
For fixing patterns refer to Roofing Industries Profile Technical Summary for the selected profile.

2.10 FIXING SCREWS

To AS 3566. Screws appropriate to the roofing material and the supporting structure, as required by Roofing Industries and with a Class 4 or 5 durability and not less than the material being fixed. Screws into timber to penetrate by minimum 30mm. Screw fasteners to be head stamped identifying the manufacturer and class. Refer to SELECTIONS.

2.11 RIVETS

Sealed aluminium, minimum diameter 4.0mm. Refer to Roofing Industries for requirements.

Components

2.12 FLASHINGS GENERALLY

To E2/AS1, 4.0, **Flashings**.
Formable grade 0.55 BMT for galvanized, aluminium/zinc, aluminium/zinc/magnesium - coated and pre-painted steel, and 0.70 BMT or 0.90 BMT for folded aluminium (or 0.7mm for small folded aluminium flashings) to the same standards as the profiled sheets, notched where across profile or provided with a soft edge.

2.13 FLASHINGS TO VERGE, RIDGE AND HIP

To E2/AS1, 4.0, **Flashings**.
Supplied by the roofing manufacturer to match or to suit the roofing.

2.14 BOOT FLASHINGS

Generally to E2/AS1, 8.4.17 **Roof penetrations** (note; E2/AS1, Figure.54 **Soaker flashing for pipe penetration**, has an error, use as guide only).
EPDM proprietary pipe flashing laid on 45º bias to roofing, with over-flashing (soaker flashing) if required.
A boot flashing should be positioned so that it dams a roofing pan no more than 50%, if this cannot be avoided use an over-flashing back to the ridge and fix the boot flashing to that.

2.15 ALUMINIUM FLASHINGS - WELDED

Aluminium alloy series 5000 temper H34 minimum thickness 1.6mm BMT to AS/NZS 1734.
Aluminium welding to AS/NZS 1665.

2.16 STAINLESS STEEL FLASHINGS - WELDED

Welded stainless steel flashings shall be minimum thickness BMT 1.2mm and grade 304 or 316 stainless steel in accordance with Table 1 of ISO/TS 15510. Welding to AS/NZS 1554.6.
Refer to SELECTIONS for details.

Accessories

2.17 WIRE NETTING AND SAFETY MESH

Refer to 4161 UNDERLAYS, FOIL AND DPC.

2.18 UNDERLAY AND REFLECTIVE FOIL

Refer to 4161 UNDERLAYS, FOIL AND DPC for roof underlays.

KDC - Approved Building Consent Document - BC21-608_SP_ISSUED - Pg 135 of 177 - 29/09/2021 - vsingh

2.19 PLASTIC ROOFING

Refer to 4312RI ROOFING INDUSTRIES PROFILED NATURAL LIGHTING.

2.20 SEALANT

Neutral curing MS sealant or polymer sealant as required by Roofing Industries and used as directed.

KDC - Approved Building Consent Document - BC21-608_SP_ISSUED - Pg 136 of 177 - 29/09/2021 - vsingh

3 EXECUTION

Conditions

3.1 INSPECTION

Inspect the roof framing and supporting structure to ensure that it is complete and fully braced ready for roofing and free from any misalignments or protrusions that could damage the roofing.

3.2 FRAMING TIMBER MOISTURE

When continuous metal cladding etc. Runs along a long continuous timber member and is directly fixed to it, the timbers equilibrium moisture content (EMC) to be 18% or less. For flashings in this situation (sometimes called transverse flashings) the framing EMC to be maximum 16%, and preferably as low as 12%. Transverse flashings can be temporarily tacked in place and final fixing done when moisture content is acceptable.

3.3 STORAGE

Upon delivery visually inspect sheets for damage and accept packs of undamaged roofing. Reject all damaged material. Store on a level firm base clear of the ground, with packs well ventilated and completely protected from weather and damage. Do not allow moisture to build up between sheets. If sheet packs become wet, fillet or cross stack to allow air circulation and drying between sheets.

3.4 HANDLING

Do not drag sheets across each other or other materials. Avoid distortion and contact with damaging substances, including cement. Long lengths of roofing should be lifted onto the roof using an approved load spreading beam. Protect edges and surface finishes from damage, keep under cover and remove as the product is being installed. Use soft, flat sole shoes when fixing and for all other work on the roof. Walk along the purlin line whenever possible.

3.5 SEPARATION

Isolate dissimilar materials (metals and non-metals) in close proximity as necessary by painting the surfaces or fitting separator strips of compatible materials. Place isolators between metals and treated timber and cement based materials. Do not use lead sheet or copper in contact with or allow water run-off onto galvanized or aluminium/zinc coated steel.

Application

3.6 WELDING ALUMINIUM FLASHINGS

Welding to be carried out by a welder qualified under AS/NZS 1665. Preparation and welding to comply with AS/NZS 1665. Finish welds smooth and without abrupt surface changes ready for coatings. Refer to SELECTIONS for BMT and coatings.

3.7 WELDING STAINLESS STEEL FLASHINGS

Weld stainless steel flashings to AS/NZS 1554.6. Preparation and welding to comply with AS/NZS 1554.6. Finish welds smooth and without abrupt surface changes ready for coatings. Refer to SELECTIONS for BMT and coatings.

3.8 FIX INSULATION

Refer to Thermal Insulation sections.

3.9 SET-OUT

Carefully set out with consideration of the position of side laps to take account of the prevailing wind and line of sight. Ensure all sheets are square and oversailing the gutter true to line. Check during fixing to eliminate creep or spread and string lines along purlin centres to keep fastenings in line.

3.10 END LAPS

End laps are not permitted, except where specifically detailed.

KDC - Approved Building Consent Document - BC21-608_SP_ISSUED - Pg 137 of 177 - 29/09/2021 - vsingh

3.11 THERMAL MOVEMENT

Fix for Thermal Movement to Roofing Industries Profile Technical Summary for Selected Profile.

3.12 FIXING GENERALLY

Install and fix in accordance with the NZMRM CoP recommendations, and to Roofing Industries required fixing patterns and details for each area of the building roofing. Use only screws as required by Roofing Industries. Paint colour matched fixings and accessories before installation.

3.13 MARKING AND CUTTING

Use ink pen, chalk line or coloured pencil for marking roof sheets prior to cutting. Do not use lead pencil for marking Zincalume®, ZAM®, Colorsteel® and Colorcote®. Cut by shear only, using nibblers or hand snips. Remove all cutting and drilling debris from the roof.

3.14 FIX SHEETS

Fix sheets in place using the fastening system required by Roofing Industries for specified profiles, making due allowance for dynamic local wind pressures on the building and thermal movement in the sheet.

3.15 STOP ENDS AND DOWNTURNS

Form stop-ends at the upper end of sheets. Form downturns at the gutter line where the roof pitch is less than 8 degrees. Form using the required tools.

3.16 INSTALL FLASHINGS

Flash roof to parapets, walls and penetrations to detail. Flashings to be installed on timber framing with a moisture content of less than 20%. Where no detail is provided flash to NZMRM CoP recommendations and Roofing Industries and NZBC E2/AS1 requirements. Cut accurately and fix using sealant and rivets to detail and to Roofing Industries requirements to form a weatherproof cover. For visible flashings, plan joints/junction to take account of the aesthetic requirements.

3.17 USE OF SEALANTS

Select and use sealants only as recommended by Roofing Industries. Apply sealant in two narrow beads transversely across flashing intersections, close to the two edges. Avoid exposing sealant on outside surfaces.

3.18 FLASHING PENETRATIONS

Flash all penetrations through the roof. Fit pipe flashings with a proprietary collar flashing, with other penetrations flashed as detailed and to provide a weathertight installation. Ensure that flashings are set to avoid any ponding of water.

Completion & Commissioning

3.19 COMPLETION MATTERS

Refer to 1270 CONSTRUCTION for completion requirements and if required commissioning requirements.
NOTE: Leave this work complete with all necessary flashings, undercloaks, valleys, ridges and hips all properly installed as the work proceeds so the finished roof is completely weathertight.

4 SELECTIONS

For further details on selections go to www.roof.co.nz.
Substitutions are not permitted to the following, unless stated otherwise.

4.1 COATING SYSTEM - EXPOSURE ZONE B-C (CAT 1-3)

Project Exposure Zone B-C to NZS 3604, C 1-3 to ISO 9223.
Profile/location: ~
Base material: ~
Coating system: ~
Coating colour: ~

4.2 COATING SYSTEM - EXPOSURE ZONE D (CAT 4)

Project Exposure Zone D to NZS 3604, C 4 to ISO 9223.
Profile/location: ~
Base material: ~
Coating system: ~
Coating colour: ~

KDC - Approved Building Consent Document - BC21-608_SP_ISSUED - Pg 138 of 177 - 29/09/2021 - vsingh

4.3 COATING SYSTEM - EXPOSURE ZONE E (CAT 5)

Project Exposure Zone E to NZBC E2/AS1, C 5 (C5I & C5M) to ISO 9223.

Profile/location:	~
Base material:	~
Coating system:	~
Coating colour:	~

4.4 ROOFING INDUSTRIES - CORRUGATE ROOFING

BMT/material:	~
Purlin material:	~
Fixing:	~

Accessories

4.5 UNDERLAY

Refer to RELATED section for wall underlay.

4.6 FLASHINGS - GENERALLY

Profile:	~
BMT/material:	~
Coating system:	To match roofing
Coating colour:	To match roofing

4.7 FLASHINGS - WELDED

Location:	~
Roofing profile:	~
Material:	~
BMT	~
Coating system:	To match roofing
Coating colour:	To match roofing

5113G GIB® PLASTERBOARD LININGS

1 GENERAL

KDC - Approved Building Consent Document - BC21-608_SP_ISSUED - Pg 139 of 177 - 29/09/2021 - vsingh

This section relates to the supply, fixing and jointing of GIB® plasterboard linings and accessories to timber and steel framed walls and ceilings to form:

- standard systems
- superior finish quality systems
- bracing systems
- fire rated garage boundary wall systems
- wet area systems
- wet area systems
- GIBFix® Framing systems

1.1

1.2 ABBREVIATIONS AND DEFINITIONS

Refer to the general section 1232 INTERPRETATION & DEFINITIONS for abbreviations and definitions used throughout the specification.

The following abbreviations apply specifically to this section:

AWCINZ	Association of Wall and Ceiling Industries New Zealand

Documents

1.3 DOCUMENTS

Refer to the general section 1233 REFERENCED DOCUMENTS. The following documents are specifically referred to in this section:

NZBC C/AS2	Protection from fire
NZBC E2/AS1	External moisture
AS 1397	Continuous hot-dip metallic coated steel sheet and strip - Coatings of zinc and zinc alloyed with aluminium and magnesium
AS/NZS 2588	Gypsum plasterboard
AS/NZS 2589	Gypsum linings - Application and finishing
NZS 3604	Timber-framed buildings
AS/NZS 4600:2005	Cold-formed steel structures
ISO 5660.1	Reaction-to-fire tests - Heat release, smoke production and mass loss rate - Part 1: Heat release rate (cone calorimeter method)
ISO 5660.2	Reaction-to-fire tests - Heat release, smoke production and mass loss rate - Part 2: Smoke production rate (dynamic measurement)
BRANZ Technical Paper P21	BRANZ Technical Paper P21: A wall bracing test and evaluation procedure (2010)
NASH	Residential and Low-Rise Steel Framing Part 1 2010 Design Criteria

KDC - Approved Building Consent Document - BC21-608_SP_ISSUED - Pg 140 of 177 - 29/09/2021 - vsingh

1.4 MANUFACTURER/SUPPLIER DOCUMENTS

Manufacturer and Supplier documents relating to this part of the work.

	- GIB® Site Guide (September 2018) - GIB® Noise Control Systems (September 2017) - GIB® Fire Rated Systems (October 2018) - GIB Aqualine® Wet Area Systems (March 2007) - GIB Toughline® Aqua (July 2018) - GIB Ezybrace® Systems (2016) - GIB Ezybrace® Bracing Software - GIB Ezybrace® Systems (June 2011), with amendments (December 2014) - GIB Ezybrace® for Steel Frame Housing (NASH) Software (2011) - GIBFix® Framing System (2016) - GIB Rondo® Metal Ceiling Batten Systems - GIB-Cove® - GIB RocTape® - GIB Goldline™ Platinum Tape-on Trims (January 2006) - GIB UltraFlex® high impact corner mould (September 2004) - GIB® Tough Systems (Nov 2014)
BRANZ Appraisal 928 (2016)	GIB Ezybrace® Systems 2016
BRANZ Appraisal 427 (2007)	GIB Aqualine® Wet Area Systems
BRANZ Appraisal 928 (2016)	GIB Ezybrace® Systems 2016
GreenTag Certification	WWLCG001-001-A-2015 - GreenTag™ GreenRate / Level B for: - GIB® Standard (10mm & 13mm) - GIB Fyreline® (10mm, 13mm, 16mm & 19mm) - GIB Braceline® (10mm & 13mm) - GIB Noiseline® (10mm & 13mm) - GIB Toughline® (13mm) - GIB Wideline® (10mm & 13mm)

Copies of the above literature are available at:

Company:	Winstone Wallboards
Web:	www.gib.co.nz
Telephone:	0800 100 442

Requirements

1.5 NO SUBSTITUTIONS

Substitutions are not permitted to any specified GIB® systems, GIB® system components, GIB® plasterboard, associated GIB® products or GIB® accessories.

1.6 INSTALLER WORK SKILLS AND QUALIFICATIONS

GIB® plasterboard fixers and plasterers to be experienced competent workers, familiar with GIB® plasterboard lining systems installation and finishing techniques. Submit evidence of experience on request. For example:

- National Certificate of Interior Systems; or
- Certified Business member of AWCINZ.

Performance

1.7 INSPECTIONS AND ACCEPTANCE

Allow for inspection of the finished plasterboard surface:

- before applying sealer and
- before applying finish coatings or decorative papers,

so that after assessment of the type and/or angle of illumination and its effect on the completed decorative treatment, group approval and acceptance of the surface can be given.

1.8 BRACING REQUIREMENTS

Braced wall systems to NZS 3604 when tested to BRANZ Technical Paper P21, using:

- GIB Ezybrace® Systems (2016) and/or GIB Ezybrace® Bracing Software (2016)
- GIB Ezybrace® Systems (2011)
- GIB Ezybrace® for Steel Frame Housing (NASH) Software 2011 (to NASH Residential and Low-Rise Steel Framing Part 1 2010 Design Criteria)

Refer to drawings for location and type.

2 PRODUCTS

Materials

2.1 GIB® PLASTERBOARD

Gypsum plaster core encased in a face and backing paper formed for standard and water resistance use to AS/NZS 2588. Refer to SELECTIONS for location, type, thickness and finish.
GIB® Standard plasterboard
GIB Wideline® plasterboard
GIB Ultraline® high quality surface plasterboard
GIB Fyreline® fire resistant plasterboard
GIB Braceline® & GIB® Noiseline® dual purpose wall bracing & noise control plasterboard
GIB Aqualine® wet area plasterboard
GIB Toughline®
GIB Toughline® Aqua

Components

2.2 SCREWS

GIB® Grabber® drywall type screws as follows:

Grabber® type	Used for fixing:
High Thread	GIB Ezybrace® or Standard systems to timber
Self Tapping	Standard systems to light gauge steel or timber
Dual Thread Screws	GIBFix®, GIB Ezybrace®, or Standard systems, to light gauge steel or timber
Wafer Head Needle Tip	Light gauge metal to timber not directly under plasterboard
Pancake Head Drill Tip	Light gauge metal to light gauge metal directly under plasterboard

Refer to GIB® requirements for appropriate details.

2.3 TAPE ON TRIMS AND EDGES

GIB® Goldline™ tape-on trims
GIB® UltraFlex® high impact corner mould
GIB® Levelline® Tape on Trim

2.4 METAL ANGLE TRIMS

GIB® galvanized steel slim angle trims.

2.5 CONTROL JOINTS

GIB® Rondo® P35 control joints.
GIB® Goldline™ tape-on trims
GIB® plastic W-profile control joints.

Accessories

KDC - Approved Building Consent Document - BC21-608_SP_ISSUED - Pg 141 of 177 - 29/09/2021 - vsingh

KDC - Approved Building Consent Document - BC21-608_SP_ISSUED - Pg 142 of 177 - 29/09/2021 - vsingh

2.6 ADHESIVE

Timber frame and/or steel frame:
GIBFix® One ultra low VOC water based wallboard adhesive
GIBFix® All-Bond solvent based wallboard adhesive

2.7 JOINTING COMPOUND

Bedding compound:	GIB Tradeset®, GIB Lite Blue®, GIB MaxSet®, GIB ProMix® All Purpose, GIB Plus 4®
Finishing compound:	GIB ProMix® All Purpose, GIB® Trade Finish®, GIB® Trade Finish® Lite, GIB ProMix® Lite, GIB® U-Mix, GIB Plus 4®, GIB Trade Finish® Multi
Cove:	GIB-Cove® Bond

2.8 JOINTING TAPE

GIB® jointing tape.

2.9 GAP FILLER

GIB® Gap Filler ultra low VOC multi-purpose acrylic flexible filler

3 EXECUTION

Conditions

3.1 DELIVERY, STORAGE & HANDLING OF PRODUCTS

Refer to 1270 CONSTRUCTION for requirements relating to delivery, storage and handling of products.

3.2 ROUTINE MATTERS

Refer to 1250 TEMPORARY WORKS & SERVICES for protection requirements.
Refer to 1270 CONSTRUCTION for requirements relating to defective or damaged work, removal of protection and cleaning.

3.3 LEVELS OF PLASTERBOARD FINISH

Provide the selected plasterboard surfaces to the pre decorative levels of finish specified in AS/NZS 2589.

3.4 CONFIRM LEVELS OF PLASTERBOARD FINISH ACCEPTANCE

Before commencing work, agree in writing upon the surface finish assessment procedure towards ensuring that the quality of finish expectations are reasonable and are subsequently obtained and acceptable.

Do not apply decorative treatment until it is agreed in writing by the contractor, subcontractors and decorator that the specified plasterboard Level of Finish has been achieved.

"Levels of plasterboard finish" is a tool for specifying the required quality of finish when installing and flush stopping GIB® plasterboard **prior** to the application of a range of decorative finishes under various lighting conditions. Refer to **AS/NZS** 2589.

3.5 SUBSTRATE

Do not commence work until the substrate is plumb, level and to the standard required by the sheet manufacturer's requirements. Refer to GIB® Site Guide (September 2018).

3.6 TIMBER FRAME MOISTURE CONTENT

Maximum allowable moisture content to AS/NZS 2589 for timber framing at lining: 18% or less for plasterboard linings. Refer to NZBC E2/AS1 and GIB® Site Guide (Sept 2018).

3.7 PROTECTION

Protect surfaces; cabinetwork, fittings, equipment and finishes already in place from the possibility of water staining and stopping damage. Refer to GIB® Site Guide (Sept 2018).

Application

KDC - Approved Building Consent Document - BC21-608_SP_ISSUED - Pg 143 of 177 - 29/09/2021 - vsingh

3.8 LINING WALLS AND CEILINGS GENERALLY

Form to GIB® Site Guide (September 2018). Ensure bulk insulation thickness shall not exceed that of the wall framing.

3.9 BOARD ORIENTATION

Minimise joints by careful sheet layout using the largest sheet sizes possible, and generally fixing horizontally. Where part sheets are required for various stud heights they should be positioned so the cut sheet is as low as possible to keep joints below eye level.

3.10 FORM WET AREA SYSTEMS

Form to GIB Aqualine® Wet Area Systems requirements.

3.11 FORM BRACING SYSTEMS

Form bracing systems to:

- GIB Ezybrace® Systems (2016)

3.12 FORM CONTROL JOINTS

Form control joints to GIB® Site Guide (September 2018) requirements.

3.13 INSTALL TAPE-ON TRIMS

Install to GIB® Goldline™ Tape-on trims literature and/or GIB® Ultraflex high impact corner mould literature.

Finishing

3.14 FINISHING GENERALLY

To GIB® Site Guide (September 2018) and AS/NZS 2589.

Completion & Commissioning

3.15 COMPLETION MATTERS

Refer to 1270 CONSTRUCTION for completion requirements and if required commissioning requirements.

4 SELECTIONS

Plasterboard

4.1 GIB® STANDARD SYSTEMS WALLS

Location	Plasterboard type / Lining requirements	Thickness	Finish Level
~	GIB® Standard plasterboard	10mm	
~	GIB® Standard plasterboard	13mm	
~	GIB Ultraline® plasterboard	10mm	
~	GIB Ultraline® plasterboard	13mm	

4.2 GIB® WATER RESISTANT SYSTEMS WALLS

Location	Plasterboard type / Lining requirements	Thickness	Finish Level
~	GIB Aqualine® plasterboard	10mm	
~	GIB Aqualine® plasterboard	13mm	
~	GIB Toughline® Aqua	13mm	

4.3 GIB® STANDARD SYSTEMS CEILINGS

Location	Plasterboard type / Lining requirements	Thickness	Finish Level
~	GIB® Standard plasterboard	13mm	
~	GIB Ultraline® plasterboard	13mm	

4.4 GIB® WATER RESISTANT SYSTEMS CEILINGS

Location	Plasterboard type / Lining requirements	Thickness	Finish Level
~	GIB Aqualine® plasterboard	13mm	
~	GIB Toughline® Aqua	13mm	

4.5 GIB® BRACING SYSTEMS

Refer to:

- GIB Ezybrace® Systems (2016)
- GIB Ezybrace® Systems (2011)

For bracing element location refer to drawn documentation.

Accessories

4.6 GIB® TAPE ON EDGE OR CORNER TRIMS

Brand/type: ~

4.7 GIB® EDGE PROFILES

Brand/type: ~

KDC - Approved Building Consent Document - BC21-608_SP_ISSUED - Pg 144 of 177 - 29/09/2021 - vsingh

6700 PAINTING GENERAL

1 GENERAL

This section relates to the general matters related to painting work

1.1 RELATED WORK

Refer to 6711 PAINTING EXTERIOR for exterior paint systems.
Refer to 6721 PAINTING INTERIOR for interior paint systems.

1.2 ABBREVIATIONS

The following abbreviations are used throughout this part of the specification:

APAS	Australian Paint Approval Scheme
MPNZA	Master Painters New Zealand Association Inc.
VOC	Volatile organic compound

Documents

1.3 DOCUMENTS

Refer to the general section 1233 REFERENCED DOCUMENTS. The following documents are specifically referred to in this section:

NZBC C/AS2	Protection from fire
AS/NZS 2311	Guide to the painting of buildings
AS/NZS 2312.1	Guide to the protection of structural steel against exterior atmospheric corrosion by the use of protective coatings - Paint Coatings
AS/NZS 5131	Structural steelwork - Fabrication and erection
AS/NZS ISO 9001	Quality management systems - requirements
SNZ TS 3404	Durability requirements for steel structures and components
WorkSafe	Guidelines for the provision of facilities and general safety in the construction industry
WorkSafe	Guidelines for the management of lead-based paint
MPNZA	Specification manual
MPNZA	Health and Safety Programme

Health and Safety at Work Act 2015

1.4

~

Requirements

1.5 NO SUBSTITUTIONS

Substitutions are not permitted to any specified manufacturer's system, or associated components and products.

1.6 QUALIFICATIONS

Painters to be a member of MPNZA and experienced competent workers, familiar with the materials and the techniques specified.

KDC - Approved Building Consent Document - BC21-608_SP_ISSUED - Pg 145 of 177 - 29/09/2021 - vsingh

1.7 HEALTH AND SAFETY

Refer to the requirements of the Health and Safety at Work Act 2015 and WorkSafe: Guidelines for the provision of facilities and general safety in the construction industry. If the elimination or isolation of potential hazards is not possible then minimise hazards in this work on site by using the proper equipment and techniques as required in the MPNZA Health and Safety Programme. Supply protective clothing and equipment. Inform employees and others on site of the hazards and put in place procedures for dealing with emergencies.

Refer to WorkSafe: Guidelines for the management of lead-based paint for the required procedures and precautions when:

- treating/removing lead-based paint
- burning off paint
- sanding off paint
- using solvent based paint removers.

1.8 MATERIAL SAFETY DATA SHEET

Obtain from each paint manufacturer the material safety sheet for each product used. Keep sheets on site and comply with the required safety procedures.

Warranties

1.9 WARRANTY

Warrant this work under normal environmental and use conditions against failure.
2 years: Warranty period

Refer to the general section 1237WA WARRANTY AGREEMENT for the required format and details of when completed warranty must be submitted.

Performance

1.10 MANUFACTURER'S INSPECTION

Allow the paint manufacturers to inspect the work in progress and to take samples of their products from site if requested.

1.11 INSPECTION OF WORK

Inspection of the whole of the work at each of the stages scheduled may be made. Agree a programme that will facilitate such inspection, including notification when each part and stage of the work is ready for inspection.

2 PRODUCTS

Materials

2.1 PAINT TYPES

Use the manufacturer's complete system and only the products specified.

2.2 MATERIALS GENERALLY

Use only the Manufacturer's products which are guaranteed for their consistency and performance under AS/NZS ISO 9001 and APAS approval, prepared, mixed and applied as directed in the Manufacturer's specification sheets, specification manuals and product data sheets.

2.3 THINNERS AND ADDITIVES

Only use thinners or additives within the stated limits for the particular situations specified.

Accessories

2.4 FILLERS

For recommendations on; fillers, stopping, paint strippers, cleaning agents, etching solutions, mould inhibitors, rust inhibitors, knotting and other commodities used for the surface preparation, refer to the manufacturer of the specified coating.

3 EXECUTION

KDC - Approved Building Consent Document - BC21-608_SP_ISSUED - Pg 146 of 177 - 29/09/2021 - vsingh

Conditions

3.1 EXECUTION

To conform to manufacturer's requirements and those methods, practices and techniques contained in AS/NZS 2311, the MPNZA Specification manual, and WorkSafe: Guidelines for the provision of facilities and general safety in the construction industry.

3.2 PREPARE

Prepare surfaces to the coating manufacturer's requirements.

3.3 COATED SURFACES

Ensure that substrate surfaces are able to achieve the specified finish.

3.4 PRE-PRIMED SURFACES

Sand down any breakdown or damage of the primer to a sound surface and immediately re-prime.

3.5 BRUSH DOWN

Brush down surfaces immediately before application, to remove dust, dirt and loose material.

3.6 COMPATIBILITY

Check that materials are as required by the paint manufacturers for the particular surface and conditions of exposure, and that they are compatible with each other. Use paint from the same manufacturer for each paint system. If not compatible, obtain instructions before proceeding.

3.7 TREATED SURFACES

Where surfaces have been treated with preservatives or fire retardants, check with the treatment manufacturer that coating materials are compatible with the treatment and do not inhibit its performance. If they are not compatible, obtain instructions before proceeding.

3.8 BACK PAINTING

Co-ordinate with cladding and/or lining installer as to who will do the work and timing.

Exterior
For exterior cladding and trim that require on site finishing, paint the back and exposed bottom edges at the base of the cladding (generally, bottom plate overhang and horizontal flashings) to the manufacturer's requirements, but at least to 150mm up from base. Coating to match front finish, generally apply 2 coats or 1 coat if pre-primed.
Refer to appropriate exterior paint sections SELECTION clauses for claddings to be back painted.

Interior
For lining and trim that require on site finishing and/or back painting (usually wet areas), paint the back and exposed bottom edges at the base of the lining, to the manufacturer's requirements, but at least to 150mm up from base. Coating to match front finish, generally apply 2 coats or 1 coat if pre-primed, or if no front finish seal to manufacturer's requirements.
Refer to appropriate interior paint sections SELECTION clauses for linings to be back painted.

3.9 ANCILLARY SURFACES

The coatings listed in schedules and elsewhere are of necessity simplified. Coat ancillary exposed surfaces to match similar or adjacent materials or areas, except where a fair-faced natural finish is required or items are completely prefinished. In cases of doubt obtain instructions before proceeding.

3.10 HARDWARE

Do not paint hinges or hardware that cannot be removed. If items can be removed, carefully remove hardware, fixtures and fittings before commencing work. Set aside where they cannot be damaged or misplaced and replace on completion.

3.11 PROTECTION

Use dropsheets, coverings and masking necessary to protect adjoining fixtures, fittings and spaces from paint drops, spots, spray and damage.

Preparation - unpainted and pre-primed timber and wood based products

KDC - Approved Building Consent Document - BC21-608_SP_ISSUED - Pg 147 of 177 - 29/09/2021 - vsingh

3.12 MOISTURE CONTENT

Ensure moisture content at the time of application is near to the equilibrium moisture content pertaining to the particular locality in which the timber is used, without any excessive moisture content gradient between core and surface.

3.13 PREPARING DRESSED TIMBER

Ensure dressed timber is smooth, free from raised or woolly grain, planing burrs or other machining defects. Slightly round or ease sharp edges to ensure they can be properly coated. Sand timber to bring up to a smooth finish along the direction of the grain. Sand timber back to new condition timber that has been weathered.

3.14 PREPARING ROUGH SAWN TIMBER

Thoroughly brush along the direction of the grain to remove dust and dirt.

3.15 PREPARING PRE-PRIMED TIMBER

Check pre-prime coat for damage, powdering, weathering or loss of adhesion. Where primer is sound, thoroughly brush along the direction of the grain to remove dust and dirt. If there is doubt, sand back and re-prime.

3.16 TIMBER SPECIES

Check that the preparation and paint system is suitable for the timber species.

3.17 PREPARING DAMAGE AND DEFECTS

Scrape clean loose or soft material holes, depressions, resin or gum pockets, knot holes, surface splits, checks, or any localised decay. Apply primer and/or sealer specified and fill these areas with linseed oil putty or other appropriate filler.

3.18 FIXINGS

Take timber fixings below the painted or clear finished surface. Leave corrosion resistant timber fixings flush with clear finished surfaces.

3.19 CLEANING

Remove grease and oil by wiping down with solvent or water-based degreasing agent. Remove resin by wiping down with solvent or water-based degreasing agent or heating and scraping. Remove sanding dust. Bad staining may be untreatable and require replacement of timber, discuss with paint manufacturer and main contractor.

Preparation - gypsum plaster

3.20 PREPARING GYPSUM PLASTER

Fill and sand small crevices and cracks. Surface moisture content not to exceed 12% at time of coating.

Preparation - unpainted linings

3.21 PREPARING FIBROUS PLASTER

Check for and remove release agents and other contaminants by washing with clean water or solvent and allow to dry. Fill cracks and surface imperfections with patching plaster and lightly sand smooth. Remove dust.

3.22 PREPARING PLASTERBOARD

Check that joints are prepared to a smooth level surface finish. Fill cracks and surface imperfections with the sheet manufacturer's required stopping compound and lightly sand smooth. Remove dust.

Preparation - painted surfaces generally

3.23 SURFACE PREPARATION

Refer to the Manufacturer's specification sheets and product data sheets. Carry out the preparatory work required by them for each of the substrates.

For interior surfaces such as paper faced plasterboard use the Manufacturer's recommended finishing compound as an aid to achieving a Level 5 finish.

KDC - Approved Building Consent Document - BC21-608_SP_ISSUED - Pg 148 of 177 - 29/09/2021 - vsingh

KDC - Approved Building Consent Document - BC21-608_SP_ISSUED - Pg 149 of 177 - 29/09/2021 - vsingh

3.24 MOULD

Sterilise surface mould by washing or sponging the whole surface with a one part sodium hypochlorite household bleach to three parts clean water solution. Allow bleach to act for 30 minutes and wash off with clean water. Wash cloths and sponges regularly in clean water. Reapplication may be necessary. Treat with anti-mould solution to the treatment manufacturer's requirements.

3.25 GAP FILLING

Fill cracks, holes, indented and damaged surfaces with putty, plaster filler, wood filler, or plastic wood, as appropriate and in accordance with the paint manufacturer's requirements. Allow to dry or set before sanding back level with the surface. Prime coat or seal the timber before using putty. Wet cement or gypsum base plasters before applying filler. Use only Portland cement base types, or water-insoluble organic-based gap fillers in exterior or wet areas.

Application - before applying final coatings

3.26 OFF-SITE WORK

Carry out off-site preparation and coating under cover, in a suitable environment and with adequate lighting. Store items both before and after coating in a clean, dry area, protected from the weather and mechanical damage, properly stacked and spaced to permit air circulation and to prevent sticking of surfaces.

3.27 PRIMING JOINERY

Before priming preservative treated timber ensure that any cut surfaces have been retreated. Liberally coat end grain, allow to soak in and then recoat. Ensure LOSP. treated joinery has dried sufficiently to lose odour.

3.28 CONCEALED JOINERY SURFACES

Apply off-site coatings to all surfaces including those which will be concealed when incorporated into the building.

3.29 CONCEALED METAL SURFACES

Apply primer to suit the coating system to all metal surfaces which will be concealed when incorporated into the building.

3.30 DOORS

Prime or seal and paint all six faces of doors before hanging.

3.31 BEAD GLAZING

Before glazing apply the first two coats, or the primer and one undercoat, to rebates of stained, varnished or painted joinery and beads.

3.32 PUTTY GLAZING

Follow putty manufacturers recommendations for application, drying, and painting. Ensure that the putty is fully protected by the coating system as soon as it is sufficiently hard.

Application - generally

3.33 PAINTING GENERALLY

Comply with the paint manufacturer's requirements and any additional requirements in this specification.

3.34 MIXING

Thoroughly mix paints. Lift any settled pigment and ensure the paint is homogenous.

3.35 ENVIRONMENT

Paint exterior surfaces only in favourable weather conditions:

- warm dry days without frost or heavy dews
- avoid painting in direct sunlight any surfaces that absorb heat excessively
- as far as possible apply paint in the temperature range 15°C to 25°C
- do not paint if temperatures fall outside the range of 10°C and 35°C unless paints with the necessary temperature tolerance have been specified
- do not apply solvent borne paint if moisture is present on the surface

3.36 SEQUENCE OF OPERATIONS

Painting work to generally follow the following sequences:

- back painting and pre-installation painting, then post-installation exposed-face painting
- complete surface preparation before commencing painting
- apply paint in the specified sequence using the specified paint
- allow full drying time between coats to the paint manufacturer's requirements
- do not expose primers, undercoats and intermediate coats beyond manufacturers stated instructions before applying the next coat
- finish broad areas before painting trim
- ensure batch numbers of tins are matched for whole areas
- internally, paint ceilings before walls and walls before joinery, trim and other items

3.37 PAINT APPLICATIONS

Select brush, roller, or pad and apply paint to the requirements of the paint manufacturer and to obtain a smooth even coating of correct thickness, uniform gloss and colour.

3.38 DRYING TIME

Before handling or applying the next coat of paint, give each coat the full drying time as required by the paint manufacturer. Ensure that surfaces are dry and that condensation does not occur before the paint reaches surface-dry condition.

3.39 LIGHTLY SAND

Lightly sand primers, sealers, undercoats and intermediate coats to remove dust pick-up, protruding fibres and coarse particles. Remove dust immediately before applying the next coat.

3.40 DEFECTIVE WORK

Correct defective work immediately and re-coat as required, following precisely the paint system specified.

3.41 EACH COAT

Each coat of paint and the completed paint system to have the following qualities and properties:

- uniform finish, colour, texture, sheen and hiding power
- the specified number of coats applied
- no blemishes such as runs, sags, crinkling, fat edges, entrained paint skins, hairs, dust, bare or starved patches, cracks, brush marks, ladder marks and blistering
- proper covering of corners, crannies, thin edges, cracks, end grain and other difficult places of application

Completion

3.42 CLEAN

Clean adjoining surfaces, glass and fittings of any paint contamination. Clean off glass indicators at completion of the building works. Clean glass inside and out to a shining finish.

3.43 CLEAN EQUIPMENT

Use the Manufacturer's environmental wash system for the cleaning of water-based paint and plasters from brushes, rollers, plastering or spray equipment to separate the solids from the water component for safe disposal.

3.44 LEAVE

Leave the whole of this work uniform in gloss and colour, of correct thickness, free from painting defects, clean and unmarked and to the standard required by following procedures.

3.45 REMOVE

Remove dropsheets, coverings and masking to leave surrounding surfaces and areas clean, tidy and undamaged. Remove debris, unused materials and elements from the site.

3.46 REPLACE HARDWARE

Replace hardware without damage to it or the adjoining surface. Leave properly fitted and in working order.

4 SELECTIONS

4.1 SELECTIONS

Refer to 6711 PAINTING EXTERIOR and 6721 PAINTING INTERIOR for selections.

KDC - Approved Building Consent Document - BC21-608_SP_ISSUED - Pg 150 of 177 - 29/09/2021 - vsingh

KDC - Approved Building Consent Document - BC21-608_SP_ISSUED - Pg 151 of 177 - 29/09/2021 - vsingh

6711 PAINTING EXTERIOR

1 GENERAL

This section relates to the preparation of exterior unpainted and pre-painted surfaces, and the application of exterior:

- decorative paint coatings
- protective paint coatings
- sealers
- stains
- clear finishes

Related work

1.1 RELATED SECTIONS

Refer to 6700 PAINTING GENERAL for general painting matters.
Refer to 6721 PAINTING INTERIOR for interior paint systems.

Documents

1.2

Warranties

1.3 WARRANTY

Warrant this work under normal environmental and use conditions against failure.
2 years: Warranty period

Refer to the general section for the required form of 1237WA WARRANTY AGREEMENT and details of when completed warranty must be submitted.

2 PRODUCTS

2.1 PRODUCTS

Refer to 6700 PAINTING GENERAL for product clauses.

3 EXECUTION

3.1 EXECUTION

Refer to 6700 PAINTING GENERAL for execution clauses.

4 SELECTIONS

4.1 INSPECTION OF WORK

Stage	Coating system
~	

4.2 BACK PAINTING SCHEDULE

Paint 2 coats (including any pre-prime) to match exposed face coating.

Cladding type	Extent of back painting
~	~

Paint systems

4.3 TIMBER / PLYWOOD / HARDBOARD - PAINT

Brand:	~
Coating type:	~
System:	~
Preparation:	~
1st coat:	~
2nd coat:	~
3rd coat:	~

4.4 CONCRETE / BLOCKWORK / FIBRE CEMENT / CEMENT PLASTER

Brand:	~
Coating type:	~
System:	~
Preparation:	~
1st coat:	~
2nd coat:	~
3rd coat:	~

KDC - Approved Building Consent Document - BC21-608_SP_ISSUED - Pg 152 of 177 - 29/09/2021 - vsingh

7123B BUTELINE HOT & COLD WATER SYSTEM

1 GENERAL

KDC - Approved Building Consent Document - BC21-608_SP_ISSUED - Pg 153 of 177 - 29/09/2021 - vsingh

This section relates to the **New Zealand manufactured Buteline** Hot and Cold Water System, from the network utility supply authority water main to designated points and appliances, the installation of hot water heating appliances, distributing piped hot water and the installation of isolating valves.

- **Buteline** Lilac tubing distribution of reclaimed / recycled non portable water supply.
- **Buteline** Green tubing distribution of rainwater supply

1.1 RELATED WORK

Refer to 7151 SANITARY FIXTURES, TAPWARE & ACCESSORIES for tapware supply.

Documents

1.2 DOCUMENTS

Refer to the general section 1233 REFERENCED DOCUMENTS. The following documents are specifically referred to in this section:

NZBC B2/AS1	Durability
NZBC C/AS1-AS2	Protection from fire
NZBC G4/AS1	Ventilation
NZBC G12/AS1	Water supplies
AS/NZS 2642.1	Polybutylene pipe fittings - Polybutylene (PB) pipe extrusion compounds
AS/NZS 2642.2	Polybutylene pipe fittings - Polybutylene (PB) pipe for hot and cold water applications
AS/NZS 2642.3	Polybutylene pipe fittings - Mechanical jointing fittings for use with polybutylene (PB) pipes for hot and cold water applications
AS/NZS 2845.1	Water supply - Backflow prevention devices - Materials, design and performance requirements
AS/NZS 3500.1.2018	Plumbing and Drainage - Water services
AS/NZS 3500.4	Plumbing and Drainage - Heated water services
NZS 4602	Low pressure copper thermal storage electric water heaters
NZS 4606.3	Storage water heaters - Specific requirements for water heaters with composite shells
NZS 4607	Installation of thermal storage electric water heaters: valve vented systems
NZS 4617	Tempering (3-port mixing) valves
AS/NZS 5601.1	Gas installations - general installations
NZS 7602	Polyethylene pipe (Type 5) for cold water services

Gas (Safety and Measurement) Regulations 2010
Plumbers, Gasfitters and Drainlayers Act 2006

1.3 MANUFACTURER DOCUMENTS

Manufacturer and supplier documents relating to work in this section are:
MBIE (DBH) Certificate of Accreditation 94/005B **Buteline** Polybutylene Pipe System
Buteline Plumbers technical and installation manual

Copies of the above literature are available from **Buteline**

Web:	www.buteline.com
Email:	paul.carrington@buteline.com
Telephone:	0-9-273 5800
Facsimile:	0-9-273 5808

Warranties

KDC - Approved Building Consent Document - BC21-608_SP_ISSUED - Pg 154 of 177 - 29/09/2021 - vsingh

1.4 WARRANTY

Warrant this work under normal environmental and use conditions against failure of materials and execution.

Warranty period: 2 years

Refer to the general section for the required form of 1237WA WARRANTY AGREEMENT and details of when completed warranty must be submitted.

1.5 WARRANTY - MANUFACTURER/SUPPLIER

Provide a **Buteline** materials warranty in the suppliers standard form.
Warranty period: 25 years

Requirements

1.6 NO SUBSTITUTIONS

Substitutions are not permitted to any specified **Buteline** product or component, or associated **Buteline** products, components or accessories.

1.7 QUALIFICATIONS

Refer to 1270 CONSTRUCTION for requirements relating to qualifications.
Registered plumbers to be experienced competent workers, familiar with the materials and the techniques specified. Carry out all work under the direct supervision of a certifying plumber under the Plumbers, Gasfitters and Drainlayers Act 2006.

1.8 PIPEWORK LAYOUTS

~

1.9 INFORMATION FOR OPERATION AND MAINTENANCE

Supply maintenance information to requirements set out in the 1239 OPERATION & MAINTENANCE section.

1.10 HOT WATER TEMPERATURES

To NZBC G12/AS1,6.14

Storage water heaters to store water at not less than 60ºC.

Hot water piping system, with temperature controls where necessary (tempering valve etc), to provide water at the outlet at the following temperatures:

For personal hygiene fixtures (showers, baths, wash hand basins etc) temperatures to be close to but not to exceed:

- 45ºC - for early child hood centres, schools, elderly facilities, hospitals, psychiatric or disabled institutions.
- 55ºC - for personal hygiene fixtures in all other buildings.

For non-personal hygiene fixtures (kitchen sinks and equipment, laundry tubs, cleaners sinks,industrial fixtures etc) temperatures are:

- Unrestricted - direct from water heater, approx. 60°C, must be less than 65°C (for kitchen sinks and equipment, laundry tubs, cleaners sinks etc) - in all buildings.
- Unrestricted - direct from water heater not tempered (for industrial fixtures and specific items etc) - in all buildings.

This clause excludes boiling units.

Performance

1.11 TESTING

Confirm the timing before carrying out any tests. Supply potable water and the apparatus needed.

Slowly fill service pipes with water to exclude air. Test to either NZBC G12/AS1, 7.5.1a, 1500 kpa for period not less than 15 minutes or to AS/NZS 3500.1.2018, section 18.3.1 **Hydrostatic test**, 1500 kpa for period not less than 30 minutes. Ensure there is no measurable loss of pressure. Slowly fill distribution pipes with water to exclude air. Ensure that with draw-off taps closed the system must remain water-tight.

1.12 GAS CERTIFICATE OF COMPLIANCE

Provide a Certificate of Compliance (CoC) as required by the Gas (Safety and Measurement) Regulations 2010 to the owner, and when required provide a copy to the energy supplier before connection.

1.13 GAS SAFETY CERTIFICATION

Provide a Gas Safety Certificate (GSC) as required by the Gas (Safety and Measurement) Regulations 2010 and provide a copy to the owner and when required the BCA. To be provided at completion of the work, prior to Practical Completion.

1.14 GAS APPLIANCE COMPLIANCE

Supplier to provide a Supplier Declaration of Compliance (SDoC) in accordance with the requirements of the Gas (Safety and Measurement) Regulations 2010.

2 PRODUCTS

Materials

2.1 POLYBUTENE-1 PIPE

Buteline Polybutene-1 tubing to AS/NZS 2642.1, AS/NZS 2642.2 and AS/NZS 2642.3 complete with fittings and accessories brand-matched with 50 year durability to NZBC B2/AS1, table 1 and NZBC G12/AS1, table1, with **MBIE (DBH) Certificate of Accreditation 94/005B** for both residential and commercial applications.

2.2 WATER METER

To the requirements of the network utility operator.

2.3 ADJUSTABLE WALL ELBOW

Buteline Bute-1 adjustable wall elbow with 4 way fixing clamp.

2.4 VALVES

Pressure reducing or limiting valve, filter, non-return valve, cold water expansion valve, pressure relief or temperature valve, pressure relief valve and isolating valves to NZBC G12/AS1: Water supplies.

2.5 INSULATION

Pre-formed pipe sections complete with bends and fittings, with fixing tape to the manufacturer's requirements.

2.6 TEMPERING VALVE

Tempering valve to NZS 4617 to NZBC G12/AS1.

2.7 HOT WATER SAFETY SYSTEM

Buteline AquaFuse hot water safety monitor to NZS 4617 to NZBC G12/AS1 and manufacturer requirements.

2.8 BACKFLOW PREVENTION DEVICES

Provide backflow prevention devices to AS/NZS 2845.1 where it is possible for water or contaminants to backflow into potable water supply. Refer to NZBC G12 /AS1, 3.4 Backflow protection, and NZBC G12 /AS1, table 2, Selection of Backflow Prevention.

Materials - hot water heating appliances

2.9 ELECTRIC HOT WATER CYLINDER, MAINS PRESSURE

A grade to NZS 4606.3, ceramic-coated steel thermal storage cylinder, insulated and complete with required fittings.

2.10 ELECTRIC HOT WATER CYLINDER, LOW PRESSURE

A grade to NZS 4602, copper thermal storage cylinder insulated and complete with pressure reducing valve and required fittings.

2.11 ELECTRIC HOT WATER CYLINDER, UNDER-SINK, LOW PRESSURE

A grade to NZS 4602, copper thermal storage cylinder insulated and complete with required fittings.

KDC - Approved Building Consent Document - BC21-608_SP_ISSUED - Pg 155 of 177 - 29/09/2021 - vsingh

2.12 ELECTRIC HOT WATER HEATER, INSTANTANEOUS TYPE

Instantaneous flow unit complete with required fittings to AS/NZS 60335.2.35.

2.13 ELECTRIC BOILING CYLINDER, WALL MOUNTED

Wall-mounted boiling water heater in pre-finished cabinet, complete with tap draw off.

2.14 GAS HOT WATER HEATER, STORAGE TYPE

Insulated cylinder with an integral gas burner and flue.

2.15 GAS HOT WATER HEATER, CONTINUOUS FLOW TYPE

Continuous flow unit with an integral gas burner and flue.

2.16 HEAT PUMP WATER HEATER - INTEGRAL SYSTEM

Heat pump water heating system, with insulated storage cylinder and compressor/condenser /evaporator, complete with required fittings.

2.17 HEAT PUMP WATER HEATER - SPLIT SYSTEM

Heat pump water heating system, with insulated storage cylinder and separate compressor/condenser/evaporator, complete with required fittings. With flow and return pipe work for water between cylinder and heat pump. Insulated exposed flow and return pipe work.

Components

2.18 JOINTING COMPONENTS

Buteline manufactured jointing components made from either premium grade custom thermo polymer or DR Brass designed for use with **Buteline** Polybutene-1 pipe.

2.19 PROTECTIVE TAPE

Plasticised PVC tape or similar for protection of jointing components for underground installations.

3 EXECUTION

Conditions

3.1 DELIVERY, STORAGE & HANDLING OF PRODUCTS

Refer to 1270 CONSTRUCTION for requirements relating to delivery, storage and handling of products.

3.2 ROUTINE MATTERS

Refer to 1250 TEMPORARY WORKS & SERVICES for protection requirements.
Refer to 1270 CONSTRUCTION for requirements relating to defective or damaged work, removal of protection and cleaning.

3.3 CORE HOLES AND SLEEVES

Review location and fit core holes and sleeves as needed throughout the structure in conjunction with the boxing, reinforcing and placing of concrete. Strip core holes and make good after installation of pipework.

3.4 CONCEAL

Conceal pipework within the fabric of the building unless detailed otherwise. Satin finish chrome plate exposed work, complete with matching ferrule at the surface penetration.

3.5 THERMAL MOVEMENT

Accommodate movement in pipes resulting from temperature change by the layout of the pipe runs. Sleeve through concrete or steel penetrations.

3.6 PIPE SIZE

Flow rates to each outlet to be no less than those given in NZBC G12/AS1, table 3, Acceptable flow rates to sanitary fixtures, with pipe size as determined in NZBC G12/AS1, table 4, Tempering valve and nominal pipe diameters.

3.7 EQUIPOTENTIAL BONDING METALLIC WATER SUPPLY PIPES

If it is an electrical requirement, before enclosing, ensure metallic water supply pipes and metallic sanitary fixtures are equipotential bonded (or at least conductor cable attached) to NZBC G12/AS1.

KDC - Approved Building Consent Document - BC21-608_SP_ISSUED - Pg 156 of 177 - 29/09/2021 - vsingh

KDC - Approved Building Consent Document - BC21-608_SP_ISSUED - Pg 157 of 177 - 29/09/2021 - vsingh

Application - jointing

3.8 JOINTING POLYBUTENE-1 PIPE

Aluminium clamped fitting to NZBC G12/AS1 and AS/NZS 2642, part 3.

Application - distribution systems

3.9 WATER SUPPLY CONNECTION

Arrange with the network utility operator for a connection to the water main and from there through a water meter and gate valve. Provide back flow prevention to NZBC G12/AS1.

3.10 COLD WATER INSTALLATION

From connection point, size the runs and branches to deliver the acceptable flow rate to NZBC G12/AS1, table 3, Acceptable flow rates to sanitary fixtures at each outlet. Allow for the expected concurrent use of adjoining fixtures. Lay out pipes in straight runs with support spacing to NZBC G12/AS1, table 7, Water supply pipework support spacing firmly fixed and buffered to eliminate noise and hammer, with preformed tee-connection take-offs and branches, complete with necessary valves, fittings and insulation to hot water line where required.

Application isolating valves

3.11 BUILDING ISOLATING VALVE

Install an isolating valve in an accessible position at the point of entry to the building.

3.12 INSTALL ADDITIONAL ISOLATING VALVES - CONCEALED

Install additional isolating valves in an accessible and visually discrete position adjacent to or near by the specific fixture to allow for easy connection and operation. When the building is divided into zones, ensure an isolating valve is installed in each zone.

3.13 IN LINE FILTER

Install an in line filter immediately adjacent to the main isolating valve at the point of entry to the building, in an accessible position to allow for easy cleaning.

Application - hot water systems

3.14 HOT WATER CYLINDER INSTALLATION GENERALLY

Install hot water cylinders complete to the manufacturer's requirements and to NZBC G12/AS1, 6.11, Water heater installation. Valve-vented systems to NZS 4607.

3.15 SEISMIC RESTRAINTS - GAS WATER HEATING APPLIANCES

Gas appliances to be restrained to manufacturer's requirements, AS/NZS 5601.1 and NZBC C/AS1-AS2, 7.2 Gas-burning Appliances.

3.16 SEISMIC RESTRAINTS - NON-GAS WATER HEATING APPLIANCES

Non-gas (electric, wet-back, solar etc) water heating appliances to be restrained to manufacturer's requirements and NZBC G12/AS1, 6.11, Water Heater Installation.

3.17 INSTALL LOW PRESSURE UNDER-SINK HOT WATER CYLINDER

Install hot water cylinders complete to the manufacturer's requirements and to NZBC G12/AS1, 6.11 Water heater installation. Connect to sink tap.

3.18 INSTALL ELECTRIC HOT WATER HEATER, INSTANTANEOUS TYPE

To AS/NZS 3500.4.
Install the unit to manufacturer's requirements, provide isolating valve on cold water feed.

3.19 INSTALL WALL-MOUNTED BOILING CYLINDER

Install to the cylinder manufacturer's stated requirements. Locate where shown.

3.20 GAS HOT WATER HEATER INSTALLATION, STORAGE TYPE

Install complete with the necessary fittings to the manufacturer's requirements and in accordance with NZBC G12/AS1, 6.11 Water heater installation. Install flue in accordance with the manufacturer's details and requirements and, AS/NZS 5601.1 (for internal or external appliances) or NZBC G4/AS1 (internal appliances). Refer to section 7221 GAS APPLIANCES for installation of gas appliances.

KDC - Approved Building Consent Document - BC21-608_SP_ISSUED - Pg 158 of 177 - 29/09/2021 - vsingh

3.21 GAS HOT WATER HEATER INSTALLATION, CONTINUOUS FLOW TYPE

Install complete with the necessary fittings to the manufacturer's requirements and in accordance with NZBC G12/AS1, 6.11, Water heater installation. Install flue in accordance with the manufacturer's details and requirements and, AS/NZS 5601.1 (for internal or external appliances) or NZBC G4/AS1 (internal appliances). Refer to section 7221 GAS APPLIANCES for installation of gas appliances.

3.22 INSTALL HEAT PUMP WATER HEATER - INTEGRAL SYSTEM

Install complete with the necessary fittings to the manufacturer's installation instructions.

3.23 INSTALL HEAT PUMP WATER HEATER - SPLIT SYSTEM

Install complete with the necessary fittings and pipe work, to the manufacturer's installation instructions.

3.24 HOT WATER PIPEWORK

Use a take-off spigot to give separate branches to each fitting, lay out pipes with support spacing to NZBC G12/AS1, table 7 Water supply pipework support spacing. Fix firmly and buffer to eliminate noise and hammer, with preformed tee-connection take-offs and branches, and preformed bends, complete with all necessary valves and fittings.
Lag all pipes with rigid insulation to the manufacturer's requirements.

3.25 INSTALL TEMPERING VALVE

Install tempering valve with 1 metre minimum length of copper pipe from outlet of hot water cylinder and to manufacturer's instructions.

3.26 INSTALL TEMPERING VALVE WITH AQUAFUSE

Install tempering valve 1 metre minimum from outlet of hot water cylinder and to manufacturer's instructions. Install preformed copper pipe 'T' supplied with AquaFuse kit from outlet of hot water cylinder to **Buteline** AquaFuse fitting connected to the Polybutene-1 piping. Install to **Buteline's** instructions.

Application - ring main system

3.27 RING MAIN SYSTEM

Design and install all pipework, fittings and associated accessories for a ring main system to NZBC G12/AS1 and the appropriate fitting manufacturer's specification

Installation - tapware

3.28 INSTALLING APPLIANCE ISOLATING VALVES - CONCEALED

Install isolating valves for appliances in accessible positions. Locate in adjacent cupboards and position to allow for easy connection and operation.

3.29 INSTALLING TAPWARE

Install tapware supplied under 7151 SANITARY FIXTURES, TAPWARE & ACCESSORIES. Install in accordance with the manufacturer's requirements.

Completion

3.30 COMPLETION MATTERS

Refer to 1270 CONSTRUCTION for completion requirements and if required commissioning requirements.

4 SELECTIONS

Substitutions are not permitted to the following, unless stated otherwise.

Water main

4.1 BUTELINE WATER MAIN

Size: PB 22 (18mm nominal internal bore)

4.2 POLYETHYLENE WATER MAIN

Size: 25mm outside diameter

KDC - Approved Building Consent Document - BC21-608_SP_ISSUED - Pg 159 of 177 - 29/09/2021 - vsingh

Pipework

4.3 BUTELINE POLYBUTENE-1 PIPE WORK

Branch off take:	PB 18 (13mm nominal internal bore)
Branch main:	PB 22 (18mm nominal internal bore)
Main:	PB 28 (23mm nominal internal bore)
Insulation:	~ for hot water line

4.4 BUTELINE HOT WATER RING MAIN SYSTEM PIPE WORK

Pipework:	PB 22 (18mm nominal internal bore)
Insulation:	~ for ring main
Pump:	~

4.5 BUTELINE 12MM POLYBUTENE-1 PIPE WORK FOR LONG RUN HOT LINES

Branch off take:	PB 12 (9.5mm nominal internal bore)

Hot water systems

4.6 ELECTRIC HOT WATER CYLINDER, MAINS PRESSURE

Brand:	~
Model size:	~

4.7 ELECTRIC HOT WATER CYLINDER, LOW PRESSURE

Brand:	~
Model size:	~

4.8 ELECTRIC HOT WATER CYLINDER, UNDER-SINK, LOW PRESSURE

Brand:	~
Model size:	~

4.9 ELECTRIC HOT WATER HEATER, INSTANTANEOUS TYPE

Location:	~
Brand:	~
Model:	~
Max temp:	~ ºC

4.10 ELECTRIC BOILING CYLINDER, WALL MOUNTED

Brand:	~
Model size:	~

4.11 GAS HOT WATER HEATER, STORAGE TYPE

Brand:	~
Model number and capacity:	~

4.12 GAS HOT WATER HEATER, CONTINUOUS FLOW TYPE

Brand:	~
Model size:	~
Remote controller:	~

4.13 HEAT PUMP WATER HEATER - INTEGRAL SYSTEM

Location:	~
Brand:	~
Model:	~

4.14 HEAT PUMP WATER HEATER - SPLIT SYSTEM

Brand:	~
Model:	~
Location cylinder:	~
Location heat pump:	~

Valves and accessories

4.15 TEMPERING VALVE

Location:	~
Brand/type:	~
AquaFuse:	Required

4.16 MAIN ISOLATING VALVE

Location:	~
Brand/type:	~

4.17 IN LINE FILTER

Location:	~
Brand/type:	~

4.18 FLOOR/ZONE ISOLATING VALVES

Location:	~
Brand/type:	~

4.19 APPLIANCE ISOLATING VALVES - CONCEALED

Appliance:	~
Brand/type:	Ball cock or concealed valves to suit application

4.20 APPLIANCE ISOLATING VALVES - EXPOSED

Appliance:	Washing machine
Brand/type:	Refer to tapware selections

KDC - Approved Building Consent Document - BC21-608_SP_ISSUED - Pg 160 of 177 - 29/09/2021 - vsingh

7701 ELECTRICAL BASIC

1 GENERAL

KDC - Approved Building Consent Document - BC21-608_SP_ISSUED - Pg 161 of 177 - 29/09/2021 - vsingh

This section relates to the wiring for domestic and small scale commercial installations, including:

- power
- lighting
- electrical automation
- security system
- complete with componentry
- electrically-powered fittings
- fire rated sealers, liners and accessories

1.1

1.2 ABBREVIATIONS AND DEFINITIONS

Refer to the general section 1232 INTERPRETATION & DEFINITIONS for abbreviations and definitions used throughout the specification.
The following abbreviations apply specifically to this section:

AFDD	Arc Fault Detection Device
ELV	Extra Low Voltage
GLS	general lighting service
IP	international (ingress) protection classification
NUO	Network Utility Operator
PCB	printed circuit board
PIR	passive infrared
SIA	security integration architecture
TPS	tough plastic sheathed
TCF	Telecommunications Carriers' Forum

Documents

KDC - Approved Building Consent Document - BC21-608_SP_ISSUED - Pg 162 of 177 - 29/09/2021 - vsingh

1.3 DOCUMENTS

Refer to the general section 1233 REFERENCED DOCUMENTS. The following documents are specifically referred to in this section:

NZBC E2/AS1	External moisture
NZBC F6/AS1	Visibility in escape routes
NZBC F7/AS1	Warning systems
NZBC G4/AS1	Ventilation
NZBC G9/AS1	Electricity
AS/NZS 1125	Conductors in insulated electric cables and flexible cord
AS/NZS 1768	Lightning protection
AS/NZS 2201.1	Intruder alarm systems - Client's premises - Design, installation, commissioning and maintenance
AS 2293.1:2005	Emergency escape lighting and exit signs for buildings - System design, installation and operation
AS 2293.3:2005	Emergency escape lighting and exit signs for buildings - Emergency escape luminaires and exit signs
AS/NZS 3000	Electrical installations (known as the Australian/New Zealand Wiring Rules)
AS/NZS 3008.1.2	Electrical installations - Selection of cables - Cables for alternating voltages up to and including 0.6/1 kV - Typical New Zealand installation conditions
AS/NZS 3100	Approval and test specification-general requirements for electrical equipment
AS/NZS 3112	Approval and test specification - Plugs and socket-outlets
AS/NZS 3113	Approval and test specification - Ceiling roses
AS/NZS 3190	Approval and test specification - Residual current devices (current-operated earth-leakage devices)
AS/NZS 3439.3	Low-voltage switchgear and controlgear assemblies - Particular requirements for low-voltage switchgear and controlgear assemblies intended to be installed in places where unskilled persons have access for their use - Distribution boards
AS 3786	Smoke alarms using scattered light, transmitted light or ionization
NZS 4514:2009	Interconnected smoke alarms for houses
NZS 4246	Energy Efficiency - Installing bulking thermal insulation in residential buildings
AS/NZS 5000.2	Electric cables - Polymeric insulated - for working voltages up to and including 450/750v
AS/NZS 60335.1	Household and similar electrical appliances - Safety - General requirements
AS/NZS 60695.11.5	Fire hazard testing - Test flames - Needle-flame test method - Apparatus, conformity test arrangement and guidance.
AS/NZS 61439.3	Low-voltage switchgear and controlgear assemblies - Part 3: Distribution boards intended to be operated by ordinary persons (DBO).
IEC 61643	Components for low voltage surge protection devices

Electricity (Safety) Regulations 2010 (Reprint as at 21 January 2019).
TCF Premises Wiring Cable Installers Guidelines for Telecommunication Services

Documents listed above and cited in the clauses that follow are part of this specification. However, this specification takes precedence in the event of it being at variance with the cited document.

1.4

Warranties

1.5 WARRANTY

Warrant the complete electrical installation under normal environmental and use conditions against failure of materials and execution.
1 year: Warranty period

Refer to the general section for the required form of 1237WA WARRANTY AGREEMENT and details of when completed warranty must be submitted.

Requirements

1.6 COMPLY

Comply with the Electricity (Safety) Regulations 2010, AS/NZS 3000, AS/NZS 3008.1.2, and TCF Premises Wiring Cable Installers Guidelines for Telecommunication Services for listed and prescribed work and with the utility network operator's requirements. Apply for the service connection. Arrange for the required inspections of listed work. Pay all fees.

1.7 QUALIFICATIONS GENERALLY

Refer to 1270 CONSTRUCTION for requirements relating to qualifications.

1.8 QUALIFICATIONS WORKERS – LICENSED UNDER STATUTE

Workers and supervisors to be appropriately qualified to applicable legislative requirements. Refer to 1270 CONSTRUCTION for additional requirements relating to qualifications.

1.9 SAFETY OF INSTALLATION - DESIGN BY ELECTRICAL ENGINEER

Before installation work commences obtain from the electrical engineer a Certified Design. The Certified Design is to comply with the Electricity (Safety) Regulations (2010), regulation 58.

1.10 SAFETY OF INSTALLATION - DESIGN BY ELECTRICIAN

Before installation work commences provide a Certified Design. The Certified Design is to comply with the Electricity (Safety) Regulations (2010), regulations 58. It must be signed by the designer of the installation.

1.11 ELECTRICAL CERTIFICATE OF COMPLIANCE

Supply a certificate of compliance (CoC) to the owner, and if required the NUO, as required by the Electricity (Safety) Regulations 2010, prior to connection.

- Arrange for the NUO to inspect before the meter installation, listed work inspection, polarity check and supply becoming live.
- Arrange for an inspector to inspect high risk electrical work as required by regulation 70.

1.12 ELECTRICAL SAFETY CERTIFICATE

Provide an Electrical Safety Certificate (ESC), as required by the Electricity (Safety) Regulations 2010, Reg 74A, to the owner and when required the BCA. To be provided no later than 20 working days after connection and prior to Practical Completion.

Quality control and assurance

1.13 INSPECTIONS

~	~

2 PRODUCTS

2.1 MAINS SUPPLY

Tough plastic sheathed neutral screened cable to AS/NZS 5000.2 and AS/NZS 3008.1.2, with a minimum rating of 60 amps per phase. Include pilot cable where required by network utility company.

KDC - Approved Building Consent Document - BC21-608_SP_ISSUED - Pg 163 of 177 - 29/09/2021 - vsingh

KDC - Approved Building Consent Document - BC21-608_SP_ISSUED - Pg 164 of 177 - 29/09/2021 - vsingh

2.2 CABLES

Tough plastic sheathed copper conductors to AS/NZS 5000.2, stranded above 1.0mm², and to AS/NZS 3008.1.2. Minimum sizes as below. Increase sizes if the method of installation, thermal insulation, cable length or load will reduce the cable rating below that of the MCB rating, or produce an excessive voltage drop.

Lighting circuits:	Domestic: 1.5mm² on 10 amp MCBs
Lighting circuits:	Commercial: 1.5mm² on 16 amp MCBs
Power circuits:	2.5mm² on 16 amp MCBs for domestic and unenclosed or unfilled cavity construction
	2.5mm² on 16 amp MCBs for domestic insulated construction, or filled cavity
	2.5mm² on 20 amp MCBs for unenclosed or unfilled cavity construction
	2.5mm² on 16 amp MCBs for insulated construction, or filled cavity, or lengths over 30 metres
Hot water cylinder circuits:	Single phase: 2.5mm² on 20 amp MCBs
Range/oven/hob circuits:	Single phase: 6mm² high temperature cable on 32 amp MCBs

Heat resistant cable for final connections to all heated appliances, and high temperature cable in ambient conditions that may be above 35°C (roof spaces above insulation etc).

2.3 METER BOX

Proprietary manufactured, zinc plated powder coated metal case, or ABS plastic, with glazed panel door, weatherproof where mounted outdoors, and complete with meter mounting, main switch and fuse.

2.4 DISTRIBUTION BOARD

Flush surface mount boards manufactured to AS/NZS 3439.3 , or AS/NZS 61439.3, and installed in accordance with AS/NZS 3000. Manufactured from engineering grade resin with a glow wire rating of 850°C, complete with neutral and earth busbars, and insulated comb phase bar. Distribution boards to have 20% spare capacity for future additions and alterations.

2.5 CIRCUIT PROTECTION

General requirements including main switch 63A or 100A. Residual current protection 30mA, ensure RCCBs' meet Type A and comply with AS/NZS 3190. MCBs to 4.5kA or 6kA rated.

2.6 SURGE PROTECTION

Protection for the homes appliances with IEC 61643 Class ll surge protection devices fitted to the switchboard. For variable electronic equipment fit IEC 61643 Class lll surge protection to switched socket outlets.

2.7 WALL BOXES

Standard grid size or equivalent to be manufactured from plastic or metal, with 2 or more gang size to be metal with steel inserts for accessory securing screws. Screw fixed.

2.8 SWITCH UNITS

Single pole switches to be 16 amp minimum rated, double pole or intermediate to be 16 amp minimum rated. All switches to be 230 volt a.c. polycarbonate flushplate units.
Label all switch units that control electrical equipment or special lighting circuits by proprietary engraved switch mechanisms where applicable.
Refer to drawings/schedules for number of switches per unit, dimmer units, neon (indicator or toggle) units and 2 way units.
Refer to SELECTIONS.

2.9 SWITCHED SOCKET UNITS

10 amp, 230 volt flat 3 pin socket outlets fitted with safety shutters and manufactured to AS/NZS 3100, AS/NZS 3112 and AS/NZS 3113, single or multi gang as detailed.

2.10 SWITCH UNITS - PERSON WITH DISABILITIES

In addition to clause SWITCH UNITS above, units shall comply with NZBC G9/AS1, 2.0.1.b) and d).
Refer to SELECTIONS.

KDC - Approved Building Consent Document - BC21-608_SP_ISSUED - Pg 165 of 177 - 29/09/2021 - vsingh

2.11 CEILING ROSES

White plastic mounting base with screwed cover, manufactured to AS/NZS 3113. Terminal type. Suspended fittings to have sheathed round flexible cord to AS/NZS 3008.1.2. Refer to SELECTIONS.

2.12 HOT WATER SYSTEM SWITCH

One way 20 amp switch complete with cable clamp for flexible PVC conduit to element enclosure.

2.13 BATTEN HOLDERS

Standard white plastic bayonet cap, with cap angled where wall mounted. Brass liners.

2.14 SMOKE ALARMS

Type 1 domestic smoke alarm to NZBC F7/AS1. 1.2 **Descriptions of alarm systems**. Alarm to AS 3786. A wired 230 volt ionised smoke detector type.

2.15 DOOR BELL SYSTEM

Complete with transformer for mounting on distribution board.

2.16 LIGHT FITTINGS

Fluorescent and High Intensity Discharge fittings with low loss control gear and power factor corrected to 0.95 minimum. Control gear suitable for dimming if this is required. All fittings complete with lamps; Incandescent GLS lamps pearl, coiled-coil 230v rated, bayonet cap; Fluorescent triphosphor 2700K; CFL; halogen ELV 12v dichroic reflector with cover glass unless detailed otherwise; integral/non-integral LEDs, reflectors, lenses, heatsinks and drivers - 3,000K to 4,000K, CRI >80, L70.

2.17 RECESSED LIGHT FITTINGS - RESIDENTIAL

Residential recessed light fittings to AS/NZS 3000, 4.5.2.3.5:

- Existing fittings or retrofit situations, fittings maybe unmarked.
- New fittings can only be labelled - CA 80, CA 90, CA 135, IC, IC-F, & IC-4.

Refer to clause INSULATION & GENERAL CLEARANCES for clearances from insulation and other elements.

2.18 RECESSED LIGHT FITTINGS - NON-RESIDENTIAL

Non-residential recessed light fittings to AS/NZS 3000, 4.5.2.3.5:

- Existing fittings or retrofit situations, fittings maybe unmarked.
- New fittings can only be labelled - NON-IC, Do-not Cover, CA 80, CA 90, CA 135, IC, IC-4, and IC-F.

Refer to clause INSULATION & GENERAL CLEARANCES for clearances from insulation and other elements.

2.19 EMERGENCY LIGHT FITTINGS

Emergency escape lighting and exit signs for buildings to AS 2293.3. Exit, recessed, ceiling or wall mounted. Refer to SELECTIONS.

2.20 SPACE HEATERS

Fixed wired room heaters radiant or convector, and compliant with AS/NZS 60335.1. Flush or surface mount, fitted with safety cut-outs.

2.21 EXHAUST FANS

Ceiling, wall or duct mounted exhaust fans for ventilation to NZBC G4/AS1, and compliant with AS/NZS 60335.1.

2.22 HEATED TOWEL RAILS

Fixed wired heated towel warmers, double insulated, IPX4 splash-proof, compliant with AS/NZS 60335.1, scratch resistant powdercoated or chrome finish.

2.23 EXTERIOR SWITCHES AND SWITCHED SOCKET UNITS

Using materials with superior UV protection, impact strength, and addition chemical resistance when compared with interior polycarbonate fittings. Weather protected, switches and sockets to IP56 minimum. Sockets fitted with safety shutters behind socket pins, and all products able to be padlocked off or on.

2.24 EXTERIOR LIGHT FITTINGS

Using materials with superior UV protection, impact strength, and addition chemical resistance.
Weather protection minimums:

- IP54 for protected areas under eaves or verandahs etc.
- IP55 for exposed areas not subject to pressurised water (hoses).
- IP66 for areas subject to pressurised water or major splashing.
- IP67 for inground lights
- IP68 for submerged pool fittings

Electrical automation system

2.25 ELECTRICAL AUTOMATION SYSTEM

Electrical automation system designed to enable if required:

- Lighting - automated control and dimming timer control.
- Heating including heated towel rails and ventilation systems.
- Security - programmable to simulate lights and other devices to give appearance home is occupied - ability to interface with security system and smoke detectors to activate lights.
- Energy efficiency - automatically switch circuits off when not required or on during low tariff times.
- Appliances.
- Spa pools.
- Irrigation systems.

Security system

2.26 CONTROL PANEL

Control panel system with a minimum of one installer code, one master code, 6 zones minimum and 6 user codes. The installer to select codes to suit installation.

2.27 DETECTORS

There are two main types of detectors:

- Standard passive infrared sensors: Install in stable environments with no wind flow and no direct bright sunlight.
- Passive infrared/ microwave sensors: Install in area where environmental stability is an issue.

2.28 AUDIBLE DEVICES

Internal sirens can be either a 12V Piezo Siren or a Horn speaker with a sound pressure level of no less than 95dB.
External siren can be either a stainless steel design or have hardened plastic casing. Both designs to be fully weatherproof but not limited to IP66 Rating. The siren box to contain a strobe diffuser in either blue or red. The siren shall contain a horn speaker, 12v speaker or an electronic siren. The external siren box to have both a cover and rear wall tamper mechanism.

2.29 CABLING

Security alarm wiring to NZS/AS 1125 for cables.
Security alarm wiring to be multi stranded and not single stranded, minimum 0.5mm².

2.30 PERIPHERALS

Fit anti-tamper devices to detectors, control panels and equipment housings, programmed to give a tamper indication when the system is unset and a tamper alarm when the system is set.
Standard keypad manufactured of moulded hardened plastic with either a LED or LCD screen, to match the style of the wiring accessories in diameter, colour and aesthetics.

2.31 COMMUNICATIONS

Digital dialler to be built into the PCB of all control panels, with the options for both monitoring and remote dial in windows based software. Digital dialler to comply with all the industry standard communication formats including contact I.D and SIA, and NZ Telepermit certification.
Remote software able to upload / download programming changes and or history events and change status of the security alarm with the ability to be turned off if required.

KDC - Approved Building Consent Document - BC21-608_SP_ISSUED - Pg 166 of 177 - 29/09/2021 - vsingh

3 EXECUTION

Conditions

KDC - Approved Building Consent Document - BC21-608_SP_ISSUED - Pg 167 of 177 - 29/09/2021 - vsingh

3.1 DELIVERY, STORAGE & HANDLING OF PRODUCTS

Refer to 1270 CONSTRUCTION for requirements relating to delivery, storage and handling of products.

3.2 ROUTINE MATTERS

Refer to 1250 TEMPORARY WORKS & SERVICES for protection requirements.
Refer to 1270 CONSTRUCTION for requirements relating to defective or damaged work, removal of protection and cleaning.

Installation

3.3 MAIN SUPPLY

Lay underground mains to the NUO requirements. Excavate trench, install cable and marker tape and backfill.

3.4 METER BOX

Fit to meter box manufacturer and Electricity Retailer requirements. Recess into external wall in sheltered area and flash to weatherproof to NZBC E2/AS1 fig 69. Arrange for meter installation and connection.

3.5 DISTRIBUTION BOARD

Fit to AS/NZS 3000 and board manufacturer requirements. Recess into wall or surface mount and ensure fire containment properties of the enclosure are maintained.

3.6 CIRCUIT PROTECTION

Install MCBs at distribution board to AS/NZS 3000 to protect each final sub circuit.

3.7 EARTHING CONDUCTIVE STRUCTURE & MATERIALS

Earth all at risk structural metalwork and conductive building materials to AS/NZS 3000, 5.4.6, and the Electricity (Safety) Regulations 2010.
If they form part of the building, this includes:

- Structural steel frames or members
- Light steel framing
- Exposed conductive materials, like metal sink/tub or vanity benches etc, with attached electrical units or equipment

3.8 EQUIPOTENTIAL BONDING

Equipotential Bond extraneous conductive parts together and to the electrical installation earthing system to AS/NZS 3000, 5.6, and the Electricity (Safety) Regulations 2010 and the fitting manufacturer requirements.
If they form part of the building, this includes:

- Conductive water piping (including tap etc) and exposed related connected conductive surfaces (like metal sink benches or metal cladding etc). Not required where isolated by non-conductors (plastic pipe etc) from the mass of earth.
- Other conductive piping (not earthed by other means) and exposed related connected conductive surfaces.
- Concrete reinforcing - for floor or wall forming part of a room with a shower or bath, or the shell and surround of a swimming/spa pool
- Built-in Swimming pool and spa pool - exposed conductive parts of electrical equipment, as well as exposed conductive, fixtures, fittings and pool structures within 1.25m of pool edge

3.9 MAIN EARTH

Provide a plastic toby box to contain and protect the earth electrode. Fix the connecting earth wiring closely and securely against wall surfaces.

3.10 ARC FAULT DETECTION DEVICE (AFDD)

To AS/NZS 3000 clause 2.9, AFDD on all final sub-circuits not exceeding 20A.

3.11 EARTH LEAKAGE PROTECTION

Install RCD protection to AS/NZS 3000.

3.12 SURGE PROTECTION

Install surge protection devices to manufacturer requirements and in accordance with AS/NZS 3000 and AS/NZS 1768. When fitting IEC 61643 Class ll protection at the switchboard, protect the device by a dedicated MCB.

KDC - Approved Building Consent Document - BC21-608_SP_ISSUED - Pg 168 of 177 - 29/09/2021 - vsingh

3.13 RCD - RESIDENTIAL INSTALLATIONS

Install 30mA RCD protection at the switchboard for all final sub circuits to control outlets and lighting except for fixed or stationary cooking equipment, to AS/NZS 3000.

3.14 RCD-AFDD COMBINED - RESIDENTIAL INSTALLATIONS

Install a 30mARCD - AFDD combined device (RCD Type II) at the switchboard for all final sub circuits not exceeding 20A, to control and protect outlets and lighting to AS/NZS 3000, (2018, 2.6 & 2.9). Protect over 20A to 32A final sub circuits with separate RCD and to AS/NZS 3000.

3.15 RCD - NON-RESIDENTIAL INSTALLATIONS

Install 30mA RCD Type II protection at the switchboard to suit location and use, to AS/NZS 3000.

3.16 RCD - AFDD COMBINED - NON-RESIDENTIAL INSTALLATIONS

Install a 30mA RCD - AFDD combined device (RCD Type II) at the switchboard for all final sub-circuits not exceeding 20A, to suit location and use, to AS/NZS 3000, (2018, 2.6 & 2.9). Protect over 20A to 32A final sub-circuits with separate RCD and to AS/NZS 3000.

3.17 RCD - SPECIFIC INSTALLATIONS

Install fixed wired RCD protected outlets (SRCD) in the following higher risk areas:

- Wet areas: bathrooms, laundries, kitchens.
- Near pools and water features.
- Where intended for use with cleaning equipment.
- Hand-held tools subject to movement in use, i.e. work-shops, garages.

3.18 SET-OUT

The position of outlets and equipment shown on drawings is indicative of requirements. Confirm documents and site conditions are not in conflict with other services or features. Resolve conflicts and discrepancies before proceeding with work affected. Confirm on site the exact location, disposition and mounting heights of all outlets, fittings, equipment, penetrations, and use of exposed wiring. Fix outlet items level, plumb and in line.

3.19 CABLING

Install wiring systems to AS/NZS 3000. All cabling run concealed. No TPS cable laid directly in concrete. Locate holes in timber framing for the passage of cables at the centre line of the timber member. Install cable in conduits where required to pass through concrete or underground. In walls run cabling horizontally and vertically in straight lines. In ceilings either run cabling along ceiling framing or attached to catenary wires. Clip cabling to ceiling framing/catenary wires.

3.20 CABLING CIRCUITS

Install all circuits with the appropriately rated cable and circuit protection. Install with a maximum of 8 light switch units or 4 double or single switched socket units on any circuit. Minimum 2 lighting circuits per floor. Separate circuits for all electric heating appliances. Kitchen sockets to be on at least two different circuits.

3.21 WALL BOXES

Mount flush in cavity construction size to fit products selected. Fix vertically mounted wall boxes to studs. Screw fix horizontally mounted switched socket outlet wall boxes to solid blocking or nogs. Fix switch panel wall boxes to solid blocking.

3.22 SWITCHES AND SWITCHED SOCKET UNITS

Fit all switch units and socket units to the manufacturers requirements with heights and mounting directions as indicated in SELECTIONS.

3.23 SWITCHES AND SWITCHED SOCKET UNITS - FOR PERSON WITH DISABILITIES

Fit all switch units and socket units to the manufacturers requirements with heights (& mounting direction) and location to NZBC G9/AS1 and SELECTIONS.

3.24 ISOLATING SWITCHES

Locate isolating switches in positions as confirmed by the owner, when not specifically shown on the drawings.

3.25 LIGHT FITTINGS

Install light fittings in locations and at heights specified and confirmed by the owner, in accordance with the fitting manufacturer requirements.

KDC - Approved Building Consent Document - BC21-608_SP_ISSUED - Pg 169 of 177 - 29/09/2021 - vsingh

3.26 EXTRA LOW VOLTAGE LIGHTING

Use electronic, transformers (halogen) or drivers (LED) for ELV lamps, one transformer/driver per lamp. Locate to manufacturer requirements and as close as practicable to the lamp. Ensure transformers/drivers and rear of light fittings are adequately ventilated and appropriately clear of any building elements, to AS/NZS 3000.

3.27 INSULATION & GENERAL CLEARANCES

Some electrical and mechanical services, and equipment may need to have a gap to insulation and some building elements. The gaps should be to the NZS 4246 based tables below or to the equipment manufacturers requirements if they require larger gaps. Smaller gaps to manufacturers requirements can be used for equipment specifically manufactured with heat shielding or similar (excludes light fittings).

Installed gap not to be more than 50mm bigger than the required gap.
The following tables are subject to:

- The requirements of NZS 4246 for insulation.
- The insulation is exposed to the source of heat or equipment etc.
- Insulation, has passed the needle flame test to AS/NZS 60695.11.5 and/or is non-combustible.
- Gaps to hot surfaces may have to be increased with non-compliant insulation and plastic/polymeric type insulation (EPS, XPS, PIR, etc), check with insulation manufacturer.
- Gaps to hot surfaces may be able to be reduced with non-combustible insulation, check with equipment manufacturer.
- "Secure insulation" if required means, glue, mechanical fix, or provide fixed barriers at gap edge of insulation to hold in place. Rigid or semi rigid insulation may only need a firm friction fit (secure loose pieces).
- Loose fill insulation will require fixed barriers to NZS 4246 to maintain gaps.

3.28 LIGHT FITTINGS TO INSULATION

Type of fitting	**Minimum insulation clearance**	**Comments**
Recessed, marked NON-IC, or unmarked	100mm (increase if over 100W)	To NZS 4246. NON-IC fittings and new or old unmarked & unknown fittings, and/or insulation. Insulation to be secured.
Recessed, CA 80, CA 90, or CA 135.	Abut fittings	To NZS 4246. Do not cover the fittings.
Recessed, IC, IC-F, or IC-4.	Abut & cover fittings.	To NZS 4246. Ensure insulation complies.
Recessed, marked Do-Not-Cover	Manufacturer clearances	To NZS 4246. Do not cover the fittings.
Independent control gear	Place on top of insulation & 50mm from fittings	To NZS 4246. If not on top allow 50mm clearance to insulation, do not cover. Includes, transformers, ballasts & drivers etc.
Surface fittings not exposed to insulation	Nil	To NZS 4246. Where surface fittings are isolated from insulation by appropriate linings. Excludes high heat fittings.
Surface fittings & exposed insulation	200mm	To NZS 4246. This is exposed insulation to any part of the exposed fitting & bulb/tube (e.g. exposed light in an unlined basement). Insulation to be secured.

KDC - Approved Building Consent Document - BC21-608_SP_ISSUED - Pg 170 of 177 - 29/09/2021 - vsingh

3.29 RECESSED LIGHT FITTINGS TO COMBUSTIBLE BUILDING ELEMENTS

Type of recessed fitting	Minimum building element clearance **	Comments
Marked NON-IC, or unmarked, ≤100W	100mm, vertical & horizontal	To AS/NZS 3000:2018
Marked NON-IC, or unmarked, >100W	200mm, vertical & horizontal	To AS/NZS 3000:2007
CA 80, CA 90 or CA 135	100mm, vertical & horizontal	To AS/NZS 3000:2018
IC, IC-F or IC-4	100mm, horizontal NA, vertical	To AS/NZS 3000:2018 To be NA vertical, fitting must be covered by insulation. If not covered use 100mm clearance.
Marked Do-Not-Cover	100mm, vertical & horizontal	To AS/NZS 3000:2018. Manufacturer clearances if greater than 100mm

****** Combustible building elements exclude metal elements, but include timber framing or other timber based elements, and normal linings etc. Highly flammable materials & those likely to melt will need more clearance.

3.30 INBUILT RECESSED HOT APPLIANCES TO INSULATION

Appliance	Minimum insulation clearance	Comments
Electrical heaters	Manufacturer clearances	To NZS 4246.
Electrical heaters	100mm	Manufacturer clearances not known. To NZS 4246. Clearance may be able to be reduced with non-combustible insulation. Insulation to be secured.
Heat producing appliances & equipment	Manufacturer clearances	To NZS 4246.
Heat producing appliances & equipment	50mm	Manufacturer clearances not known. To NZS 4246. Clearance may be able to be reduced with non-combustible insulation. Insulation to be secured.

Note - Appliances and equipment excludes cables, junction boxes, light switches & power sockets etc

3.31 EXTRACTS, VENTS & ROOF UNDERLAY TO INSULATION

Appliance	Minimum insulation clearance	Comments
Ducted fan motors	50mm	To NZS 4246. Includes ducted rangehoods, extractors etc. Applies to the motor unit and electrical enclosures (not the ducts).
Ducted fan ducts	Abut	To NZS 4246. Excludes motor unit and electrical enclosures.
Unducted fan motors usually discharging to ceiling space	200mm	To NZS 4246. Includes unducted, rangehoods, extractors etc, discharging into roof space. To prevent debris falling into motor. Clearance may be able to be reduced, by providing a fixed barrier around the vent.
Roofing material/underlay	25mm	To NZS 4246. Maintain clearance from underside of roofing or flexible roofing underlay, to prevent wicking.

3.32 EMERGENCY LIGHTING

Emergency escape lighting and exit signs for buildings to AS 2293.1 and NZBC F6/AS1. Fit emergency light fittings to manufacturer specifications. Refer to plans for position of fittings.

KDC - Approved Building Consent Document - BC21-608_SP_ISSUED - Pg 171 of 177 - 29/09/2021 - vsingh

3.33 ELECTRIC HOT WATER SYSTEM

For storage heaters, wire as a separate circuit through a wall-mounted isolating switch, with the cable from switch to element encased in flexible PVC conduit, clamp fixed at each end. Hot water cylinders, thermostats and 3000 watt element supplied and fitted under the hot and cold water system section.

3.34 SPACE HEATERS

Install to the heater manufacturer requirements, and to AS/NZS 3000. Fit neatly and without damage to surrounding finishes. Ensure control switches and thermostats are fitted to appliance, or otherwise connect to a control switch located adjacent to the heater and a remote thermostat.

3.35 SMOKE ALARMS

Install Type 1 domestic smoke alarm system to NZBC F7/AS1 3.0 **Domestic smoke alarms**, NZS 4514 and to the alarm manufacturer requirements. Fit neatly and without damage to the surrounding finish.

3.36 ELECTRIC POWERED FITTINGS AND EQUIPMENT

Install and wire fittings and equipment to individual fittings and equipment manufacturer requirements. Refer to the drawings for required layouts and locations for equipment. Refer to SELECTIONS for schedules of fittings.

3.37 BATHROOM ELECTRICAL FIXTURES

Install all electrical fixtures. Connect the following bathroom and toilet electrical items:

- Heated towel rails: Install to manufacturers requirements and installed in accordance with AS/NZS 3000
- Mirror demisters: Locate centrally above the wash hand basin(s). Connect wiring to room lighting unless specified otherwise.
- Exhaust fans: Install exhaust fans to manufacturer requirements. Installed in accordance with AS/NZS 3000 and NZBC G4/AS1.

3.38 OUTDOOR/EXTERIOR SERVICES

Install all wiring systems in accordance with AS/NZS 3000 and in accordance with the manufacturer recommendations:
Provide circuits and connections for exterior installations, including ELV 12/24 Volt path lighting and electronic irrigation systems. Refer to drawings for connection points. Where underground, ensure appropriate protection, such as thickness of sheathing, conduit, depth of cabling, and proximity to other services.

Use the appropriate rated fittings for power control and power supply. Weather protected switches and sockets to IP56. Install to manufacturer specifications using recommended fittings and sealants to maintain the products integrity.

Earth leakage protection to be provided for in areas where there is increased risk to human safety in the form of either RCDs at the distribution board, or socket outlet. RCDs are recommended for visible awareness of protection.

3.39 ELECTRICAL AUTOMATION SYSTEM

Fit distribution cabinet in wall, cut-out to finish flush with the wall surface, or surface mounted. Configure installation to manufacturer instructions. Provide adequate user training and operating manual to the owner.

3.40 LABELLING

Include label under each controller, switch and circuit breaker on distribution boards. Include a warning notice if light dimmers are used in the installation. List the rating of each circuit.

Completion & Commissioning

3.41 COMPLETION MATTERS

Refer to 1270 CONSTRUCTION for completion requirements and if required commissioning requirements.

3.42 COMPLETION - TESTS & CERTIFICATION

Refer to 1270 CONSTRUCTION for general test and certification requirements at completion.

~	~

3.43 COMMISSIONING - TESTS & CERTIFICATION

Refer to 1270 CONSTRUCTION for general test and certification requirements for commissioning.

~	~

4 SELECTIONS

Materials

4.1 SELECTIONS - FITTINGS AND HARDWARE

Confirm selections of all outlet fittings and hardware with the owner in writing before ordering.

4.2 METER BOX

Location:	~
Brand / type:	~

4.3 DISTRIBUTION BOARD

Location:	~
Brand / type:	~
MCB:	~
RCCB:	~
RCBO:	~
Surge protectors:	~
Modular contactors:	~
Main switch:	~
Timers	~

4.4 ELECTRICAL AUTOMATION SYSTEM

Location:	~
Brand / type:	~

4.5 SECURITY SYSTEM

Location	Brand / type	Detector
~	~	~

Outlets - fittings

4.6 INTERIOR SWITCHES AND SWITCHED SOCKET UNITS

Item	Brand / type
Switch / socket outlets:	~
Coverplate colour:	~
Switch module colour:	~

Item	Brand / type
Light dimmers:	~
Timer switch:	~
Push button switch:	~
Symbol switch:	~
PIR sensor switch:	~
Toggle switch:	~
Waterproof switches:	~

Item - RCD	Brand / type
Socket outlet:	~
Shaver outlet:	~
Safety switch:	~

KDC - Approved Building Consent Document - BC21-608_SP_ISSUED - Pg 172 of 177 - 29/09/2021 - vsingh

KDC - Approved Building Consent Document - BC21-608_SP_ISSUED - Pg 173 of 177 - 29/09/2021 - vsingh

4.7 INTERIOR SWITCHES AND SWITCHED SOCKET UNITS - PERSONS WITH DISABILITIES

In addition to clause INTERIOR OUTLETS, unit set out shall comply with NZBC G9/AS1, 2.0.1.

Item	Height to centre of unit	Orientation	Location
Switch	1000mm above FFL	vertical	Refer to drawings
Switch narrow	1000mm above FFL	vertical	Refer to drawings
Socket outlet	600mm above FFL	horizontal	Refer to drawings
Socket outlet	150mm above FFL	horizontal	Refer to drawings

Item:	Brand / Type
Switch / socket outlets:	~
Coverplate colour:	~
Switch module colour:	~

Note:

- Light switches to be horizontally aligned with door handles.
- Bedrooms to have at least one light switched from bedside.
- Socket outlets shall be at least 500mm from internal corners.

4.8 INTERIOR LIGHT FITTINGS

Fitting	Brand / type
Pendant lights:	~
Pendant cord:	~
Ceiling lights:	~
Recessed ceiling lights:	~
Recessed wall lights:	~
Recessed floor lights:	~
Wall lights:	~
Spotlights:	~
Fluorescent lights:	~
Strip lights:	~
Emergency lights:	~
Transformers:	~
LED Drivers:	~

4.9 SMOKE ALARMS

Location:	~
Brand / type:	~

4.10 EXTERIOR SWITCHES AND SWITCHED SOCKET UNITS

Item	Brand / type
Weatherproof socket outlets:	~
Timer switch:	~
Weatherproof switch:	~
Daylight switch:	~

4.11 EXTERIOR LIGHT FITTINGS

Fitting	Brand / type
Wall lights:	~
Bulkhead lights:	~
Spotlights:	~
Recessed lights:	~
Strip lights:	~
Floodlights:	~
Pole lights:	~
Security lights:	~
Security light sensors:	~
Transformers:	~
LED Drivers:	~

KDC - Approved Building Consent Document - BC21-608_SP_ISSUED - Pg 174 of 177 - 29/09/2021 - vsingh

4.12 MISCELLANEOUS ELECTRICAL ITEMS

Item	Brand / type
Door bell system:	~
Extractor fan:	~
Water heater:	~

4.13 SPACE HEATERS

Location:	~
Brand / type:	~

4.14 HEATED TOWEL RAILS

Location	Brand / type
~	~

4.15 MIRROR DE-MISTERS

Location	Size	Wattage
~	~mm x 550mm	~ watts
Brand:	~	

4.16 BATHROOM FANS AND HEATERS

Location	Brand / type
Bathroom / ensuite-Heating:	~
Bathroom / ensuite-Extract:	~

4.17 ELECTRICAL APPLIANCES

Item	Brand / type
Range:	~
Wall oven:	~
Cooker top/hob:	~
Waste disposal unit:	~
Range hood:	~

4.18 OWNER SUPPLY ELECTRICAL ITEMS

Item	Brand / type
~	~

KDC - Approved Building Consent Document - BC21-608_SP_ISSUED - Pg 175 of 177 - 29/09/2021 - vsingh

Element Name (optional) | 1.99 m²°C/W

Type: Wall: Timber Frame with vented Cavity

Timber Frame with vented Cavity | view detail

external surface 0.03

Cladding : Plywood 12mm

R-value: 0.09

Air Barrier : none

R-value: 0.00

Timber Frame & Cavity : 90mm, studs @ 400mm, dwangs @ 1200mm

Wall Frame Area: 16.2%

15-90mm vented cavity (all R-values on ext. side of cavity will be halved), R: 0.08

Framing :
R-value: 0.75

Cavity Area: 83.8%

15-90mm vented cavity (all R-values on ext. side of cavity will be halved), R: 0.08

Insulation : 2.2

still Airgap: none

R-value: 0.00

Wall Lining : Gypsum plasterboard 10mm

R-value: 0.04

internal surface 0.09

Print Page

752 Settlement Rd.

Current NZS4218:2009 Schedule Method minimum R-value Targets (non-solid contruction) :

Zone 1	Zone 2	Zone 3

KDC - Approved Building Consent Document - BC21-608_SP_ISSUED - Pg 176 of 177 - 29/09/2021 - vsingh

Element Name (optional)

1.32 m²°C/W

Type: Floor: Slab Floor

Slab Floor view detail

internal surface 0.09

Flooring : Cork Tiles

R-value: 0.14

Slab Insulation

Slab floor area [m²]:	32		
Perimeter length [m]:	16		
External wall thickness [mm]:	90		
Soil conductivity [W/m °C]	1.2		
Underslab insulation:	none	Insulation :	
Piles Footings:	Number:	Penetration Diameter [mm]:	
Slab edge insulation:	Internal	Insulation :	

Print Page

752 Settlement Rd

KDC - Approved Building Consent Document - BC21-608_SP_ISSUED - Pg 177 of 177 - 29/09/2021 - vsingh

Element Name (optional) | 3.50 m²

Type: Roof: Timber framed truss Roof, direct fixed or battened flat Ceiling

Timber framed Roof, direct fixed or battened flat Ceiling | view detail

external surface 0.03

Roofing : Corrugate iron with building paper

R-value: 0.01

Insulation : 3.2

Timber Frame & Cavity :

45mm timber battens @ 900mm with insulation inbetween, any type of purlins underneath

Roof Frame Area: 5.0%	*Cavity Area: 95.0%*
Roof space (still air) 0.11	Roof space (still air) 0.11
Framing : *R-value: 0.37*	Insulation :

Roof Lining : Gypsum plasterboard 13mm

R-value: 0.06

internal surface 0.09

Non-IC-rated recessed downlights

Ceiling Area [m²]: | Number of downlights: | Clearance from lamp holder side [m]:

Print Page

Current NZS4218:2009 Schedule Method minimum R-value Targets (non-solid contruction):

	Zone 1	Zone 2	Zone 3
Roof	R-2.9	R-2.9	R-3.3
Wall	R-1.9	R-1.9	R-2.0
Floor	R-1.3	R-1.3	R-1.3

752 Settlement Rd

06 October 2021

Gina Utting and Dawn Owens
752 Settlement Road
RD 5
Wellsford 0975

Dear Sir or Madam,

Reference Number: BC210608
Project Location: 752 Settlement Road

Hakaru
Legal description of land where building is located: Lot 3 DP 560279
Project Description: Proposed Separate Garage/Sleepout
IR Number: 1

Inspection Results:
WASTEPIPES - 06 Oct 2021 @ 09:12 by Greg Bellam

Inspection Outcome: **FAIL**- The following aspects of this inspection have resulted in a Fail result -- see the item(s) below:

Required Docs:
As built plan

These may be viewed at time of next inspection.

Inspection Summary: Waste pipes completed on test. Joints primed and glued with protection material. Okay to prep slab.. As built to come. Plumber Andrew Whitehead #25378

Your next inspection will be: **Floor Slab**
Please contact us 48 hours before you require this to book your inspection.

Outstanding Required Documents for this Building
Wastepipes

- G12: Pipework pressure test documentation
- G13: Underslab plumbing as-built & plumbers details

Floor Slab

- B1: Slab - Construction monitoring records

Drainage

- E1: Stormwater drain leakage test and as-built plans
- G13: As-builts, drainlayer details, pipework test

Final

- G9: Energy works certificate

History

Inspection Name	**Summary**
Prepour	-
Wastepipes	**FAIL** - 06 Oct 2021 **View at next inspection**
Floor Slab	-
Framing / Pre-wrap	-
Post Wrap / Cavity	-
Preline	-
Post Line	-
Internal Membrane	-
Drainage	-
Final	-

Yours Sincerely,

Greg Bellam
Senior Building Services Officer
On behalf of: Kaipara District Council

Notes: .



06 October 2021

Gina Utting and Dawn Owens
752 Settlement Road
RD 5
Wellsford 0975

Dear Sir or Madam,

Reference Number: BC210608
Project Location: 752 Settlement Road

Hakaru
Legal description of land where building is located: Lot 3 DP 560279
Project Description: Proposed Separate Garage/Sleepout
IR Number: 2

Inspection Results:
PREPOUR - 06 Oct 2021 @ 09:20 by Greg Bellam

Inspection Outcome: NOT APPLICABLE

FLOOR SLAB - 06 Oct 2021 @ 09:20 by Greg Bellam

Inspection Outcome: FAIL- The following aspects of this inspection have resulted in a Fail result -- see the item(s) below:

Required Docs:
Engineers site notes required for Geotech and structual

These may be viewed at time of next inspection.

Inspection Summary: Slab completed as per consented plans. Edge beam completed with 3 bars to bottom and 1 to top, all HD12 Ductile Mesh lapped and tied. Steel all tied and supported in place. Okay to place concrete after engineers inspection.

Your next inspection will be: **Framing / Pre-wrap**
Please contact us 48 hours before you require this to book your inspection.

Unresolved Matters:
The following issues are noted as still to be resolved:

Inspection: Wastepipes on 06 Oct 2021 by Greg Bellam
Required Docs: As built plan

Outstanding Required Documents for this Building
Wastepipes

- G12: Pipework pressure test documentation
- G13: Underslab plumbing as-built & plumbers details

Floor Slab

- B1: Slab - Construction monitoring records

Drainage

- E1: Stormwater drain leakage test and as-built plans
- G13: As-builts, drainlayer details, pipework test

Final

- G9: Energy works certificate

History

Inspection Name	**Summary**
Prepour	NOT APPLICABLE - 06 Oct 2021
Wastepipes	FAIL - 06 Oct 2021 **View at next inspection**
Floor Slab	FAIL - 06 Oct 2021 **View at next inspection**
Framing / Pre-wrap	-
Post Wrap / Cavity	-
Preline	-
Post Line	-
Internal Membrane	-
Drainage	-
Final	-

Yours Sincerely,

Greg Bellam
Senior Building Services Officer
On behalf of: Kaipara District Council

Notes: .



Notes: slab



18 May 2022

Gina Utting and Dawn Owens
752 Settlement Road
RD 5
Wellsford 0975

Dear Sir or Madam,

Reference Number: BC210608
Project Location: 752 Settlement Road

Hakaru
Legal description of land where building is located: Lot 3 DP 560279
Project Description: Proposed Separate Garage/Sleepout
IR Number: 3

Inspection Results:
WASTEPIPES - 18 May 2022 @ 09:41 by Aaron Brown

Inspection Outcome: PASS - The BCA is satisfied, on reasonable grounds, that the aspects of building work pertaining to this inspection demonstrate compliance with the building consent.

FLOOR SLAB - 18 May 2022 @ 09:41 by Aaron Brown

Inspection Outcome: PASS - The BCA is satisfied, on reasonable grounds, that the aspects of building work pertaining to this inspection demonstrate compliance with the building consent.

FRAMING / PRE-WRAP - 18 May 2022 @ 09:41 by Aaron Brown

Inspection Outcome: PASS - The BCA is satisfied, on reasonable grounds, that the aspects of building work pertaining to this inspection demonstrate compliance with the building consent.

Formal Directive: Okay to proceed with roofing cladding and flashings, Building wrap, cavity system and installation of Exterior Joinery. Next inspection post Wrap/ Pre cladding

Inspection Summary: Please refer to photos and notes for site observations

Your next inspection will be: **Post Wrap / Cavity**
Please contact us 48 hours before you require this to book your inspection.

Outstanding Required Documents for this Building
Wastepipes

- G12: Pipework pressure test documentation
- G13: Underslab plumbing as-built & plumbers details

Floor Slab

- B1: Slab - Construction monitoring records

Drainage

- E1: Stormwater drain leakage test and as-built plans
- G13: As-builts, drainlayer details, pipework test

Final

- G9: Energy works certificate

History

Inspection Name	Summary
Prepour	NOT APPLICABLE - 06 Oct 2021
Wastepipes	PASS - 18 May 2022
Floor Slab	PASS - 18 May 2022
Framing / Pre-wrap	PASS - 18 May 2022
Post Wrap / Cavity	-
Preline	-
Post Line	-
Internal Membrane	-
Drainage	-
Final	-

Yours Sincerely,

Aaron Brown
Building Team Leader

On behalf of: Kaipara District Council

Notes: Garage sleepout



Notes: Lintel top plate and rafter fixings in accordance with the truss and frame manufacturers asbuilts



Notes: bottom plate and brace fixings



Notes: bottom plate fixings



Notes: all internal bottom plates bolted



Notes: roof strap bracing installed



Notes: Dragon ties



Notes: direct fixed timber ceiling battens will be installed for bottom cord restraints



Notes: stud to bottom plate straps installed and bottom plates bolted



Notes: purlins at 900 crs



08 July 2022

Gina Utting and Dawn Owens
752 Settlement Road
RD 5
Wellsford 0975

Dear Sir or Madam,

Reference Number: BC210608
Project Location: 752 Settlement Road

Hakaru
Legal description of land where building is located: Lot 3 DP 560279
Project Description: Proposed Separate Garage/Sleepout
IR Number: 4

Note: No inspections have been recorded since last inspection report was generated.

Inspection Summary: Inspection cancelled due to weather. Customer has re booked.

Your next inspection will be: **Post Wrap / Cavity**
Please contact us 48 hours before you require this to book your inspection.

Outstanding Required Documents for this Building
Wastepipes

- G12: Pipework pressure test documentation
- G13: Underslab plumbing as-built & plumbers details

Floor Slab

- B1: Slab - Construction monitoring records

Drainage

- E1: Stormwater drain leakage test and as-built plans
- G13: As-builts, drainlayer details, pipework test

Final

- G9: Energy works certificate

History

Inspection Name	Summary
Prepour	**NOT APPLICABLE** - 06 Oct 2021
Wastepipes	**PASS** - 18 May 2022
Floor Slab	**PASS** - 18 May 2022
Framing / Pre-wrap	**PASS** - 18 May 2022
Post Wrap / Cavity	-
Preline	-
Post Line	-
Internal Membrane	-
Drainage	-
Final	-

Yours Sincerely,



John Dowden
Building Services Officer
On behalf of: Kaipara District Council

12 July 2022

Gina Utting and Dawn Owens
752 Settlement Road
RD 5
Wellsford 0975

Dear Sir or Madam,

Reference Number: BC210608
Project Location: 752 Settlement Road

Hakaru
Legal description of land where building is located: Lot 3 DP 560279
Project Description: Proposed Separate Garage/Sleepout
IR Number: 5

Inspection Results:
POST WRAP / CAVITY - 12 Jul 2022 @ 09:03 by Greg Bellam

Inspection Outcome: PASS - The BCA is satisfied, on reasonable grounds, that the aspects of building work pertaining to this inspection demonstrate compliance with the building consent.

Inspection Summary: Wrap and cavity completed as per consented plans. No service penetrations through wrap. Junction flashings completed. Head flashings taped to wrap with stop ends in place, Cavity closers in place. Okay to clad.

Your next inspection will be: **Preline**
Please contact us 48 hours before you require this to book your inspection.

Outstanding Required Documents for this Building
Wastepipes

- G12: Pipework pressure test documentation
- G13: Underslab plumbing as-built & plumbers details

Floor Slab

- B1: Slab - Construction monitoring records

Drainage

- E1: Stormwater drain leakage test and as-built plans
- G13: As-builts, drainlayer details, pipework test

Final

- G9: Energy works certificate

History

Inspection Name	Summary
Prepour	NOT APPLICABLE - 06 Oct 2021
Wastepipes	PASS - 18 May 2022
Floor Slab	PASS - 18 May 2022
Framing / Pre-wrap	PASS - 18 May 2022
Post Wrap / Cavity	PASS - 12 Jul 2022
Preline	-
Post Line	-
Internal Membrane	-
Drainage	-
Final	-

Yours Sincerely,



Greg Bellam
Senior Building Services Officer
On behalf of: Kaipara District Council

Notes: support bar fixed with stainless screws



Notes: front wall



Notes: junction flashing



15 September 2022

Gina Utting and Dawn Owens
752 Settlement Road
RD 5
Wellsford 0975

Dear Sir or Madam,

Reference Number: BC210608
Project Location: 752 Settlement Road

Hakaru
Legal description of land where building is located: Lot 3 DP 560279
Project Description: Proposed Separate Garage/Sleepout
IR Number: 6

Inspection Results:
PRELINE - 15 Sep 2022 @ 10:17 by John Edwards

Inspection Outcome: **FAIL**- The following aspects of this inspection have resulted in a Fail result -- see the item(s) below:

Required Docs:
1-PS3 plumbers form and pressure test required

B1: Walls, Wall bracing, Posts, Beams:
Wall bracing:

B1: Wall & Ceiling Linings:
1. The structure is not adequately protected against the effects of weather.
1-complete freeze board up to soffit garage doors.
2. Air seal installation is not in accordance with building consent. Please rectify and advise when work is ready for re-inspection.

1-Foam bottom of fill height windows and last couple of windows , will see next inspection .

These may be viewed at time of next inspection.

Site Communication: Ethan Clark contact on site .

Inspection Summary: Garage sleep out, moisture 14-18% , windows are foamed , R2.2 wall ,R3.2 ceiling , Insulation is in the walls behind the wall braces in the garage , bute line pipe work is siliconed through penetrations , timber ceiling battens at 400mm centres , ducting in place bath room , building is weather tite , plumbers guage 1500kpa ,ok to continue will see outstanding items next inspection.

Your next inspection will be: **Post Line**
Please contact us 48 hours before you require this to book your inspection.

Outstanding Required Documents for this Building
Wastepipes

- G12: Pipework pressure test documentation
- G13: Underslab plumbing as-built & plumbers details

Floor Slab

- B1: Slab - Construction monitoring records

Drainage

- E1: Stormwater drain leakage test and as-built plans
- G13: As-builts, drainlayer details, pipework test

Final

- G9: Energy works certificate

History

Inspection Name	**Summary**
Prepour	**NOT APPLICABLE** - 06 Oct 2021
Wastepipes	**PASS** - 18 May 2022
Floor Slab	**PASS** - 18 May 2022
Framing / Pre-wrap	**PASS** - 18 May 2022
Post Wrap / Cavity	**PASS** - 12 Jul 2022
Preline	**FAIL** - 15 Sep 2022
	View at next inspection
Post Line	-
Internal Membrane	-
Drainage	-
Final	-

Yours Sincerely,



John Edwards
building control officer
On behalf of: Kaipara District Council

Notes: Preline - moisture #1 15/09/22



Notes: Preline - wall and ceiling insulation#2 15/09/22



Notes: Preline - R2.2 wall #3 15/09/22



Notes: Preline - R3.2 #4 15/09/22



Notes: Preline - bute line pipe work is siliconed .#5 15/09/22



Notes: Preline - 1500kpa#1 15/09/22



Notes: Preline - HWC pipe work #2 15/09/22



Notes: Preline -150mm centres fixings to edges ,200mm to centre #3 15/09/22



Notes: Preline - #4 15/09/22



Notes: Preline - #5 15/09/22



17 November 2022

Gina Utting and Dawn Owens
752 Settlement Road
RD 5
Wellsford 0975

Dear Sir or Madam,

Reference Number: BC210608
Project Location: 752 Settlement Road

Hakaru
Legal description of land where building is located: Lot 3 DP 560279
Project Description: Proposed Separate Garage/Sleepout
IR Number: 7

Inspection Results:
PRELINE - 17 Nov 2022 @ 08:38 by Greg Bellam

These may be viewed at time of next inspection.

POST LINE - 17 Nov 2022 @ 08:38 by Greg Bellam

Inspection Outcome: **PASS** - The BCA is satisfied, on reasonable grounds, that the aspects of building work pertaining to this inspection demonstrate compliance with the building consent.

Inspection Summary: Post line completed as per consented plans. Standard and brace sheets fixed to gib specs. Aqua line to wet room fixed as standard sheets. Okay to continue. Bottom of rach slider has been sealed as per preline inspection

Your next inspection will be: **Drainage**
Please contact us 48 hours before you require this to book your inspection.
Unresolved Matters:
The following issues are noted as still to be resolved:

Inspection: Preline on 15 Sep 2022 by John Edwards
B1: Walls, Wall bracing, Posts, Beams: Wall bracing:

Inspection: Preline on 15 Sep 2022 by John Edwards
B1: Wall & Ceiling Linings: 1. The structure is not adequately protected against the effects of weather. 1-complete freeze board up to soffit garage doors.
2. Air seal installation is not in accordance with building consent. Please rectify and advise when work is ready for re-inspection.

1-Foam bottom of fill height windows and last couple of windows , will see next inspection .

Outstanding Required Documents for this Building
Wastepipes

- G12: Pipework pressure test documentation
- G13: Underslab plumbing as-built & plumbers details

Floor Slab

- B1: Slab - Construction monitoring records

Drainage

- E1: Stormwater drain leakage test and as-built plans
- G13: As-builts, drainlayer details, pipework test

Final

- G9: Energy works certificate

History

Inspection Name	**Summary**
Prepour	**NOT APPLICABLE** - 06 Oct 2021
Wastepipes	**PASS** - 18 May 2022
Floor Slab	**PASS** - 18 May 2022
Framing / Pre-wrap	**PASS** - 18 May 2022
Post Wrap / Cavity	**PASS** - 12 Jul 2022
Preline	**FAIL** - 15 Sep 2022
	View at next inspection
Post Line	**PASS** - 17 Nov 2022
Internal Membrane	-
Drainage	-
Final	-

Yours Sincerely,



Greg Bellam
Senior Building Services Officer
On behalf of: Kaipara District Council

Notes: BL fixing



Notes: GS1 fixing



19 December 2022

Gina Utting and Dawn Owens
752 Settlement Road
RD 5
Wellsford 0975

Dear Sir or Madam,

Reference Number: BC210608
Project Location: 752 Settlement Road

Hakaru
Legal description of land where building is located: Lot 3 DP 560279
Project Description: Proposed Separate Garage/Sleepout
IR Number: 8

Inspection Results:
PRELINE - 19 Dec 2022 @ 10:34 by Graeme Mager

Inspection Outcome: PASS - The BCA is satisfied, on reasonable grounds, that the aspects of building work pertaining to this inspection demonstrate compliance with the building consent.

INTERNAL MEMBRANE - 19 Dec 2022 @ 10:34 by Graeme Mager

Inspection Outcome: **NOT APPLICABLE**

DRAINAGE - 19 Dec 2022 @ 10:34 by Graeme Mager

Inspection Outcome: **PASS** - The BCA is satisfied, on reasonable grounds, that the aspects of building work pertaining to this inspection demonstrate compliance with the building consent.

FINAL - 19 Dec 2022 @ 10:34 by Graeme Mager

Inspection Outcome: **FAIL**- The following aspects of this inspection have resulted in a Fail result -- see the item(s) below:

Required Docs:
EWC COC electrical to be provided to alpha portal and any ROW memorandums that can be provided but not necessary as not restricted building works.

Site Considerations:
Finished ground to be addressed around building.

B2: DURABILITY:
B2: Durability: Panting required to exterior.

D1: Access Routes - Residential:
Access into the building is not compliant. Please rectify the following.

Formal Directive: Please upload the above required documents to alpha portal and complete the following items;
1- Build ground levels up to protect floor slab fines being washed out 225mm min and build ground up at access doors so the rise height is no more that 190mm and ramp access into garage doors.
2- Finishing trims to be installed to exterior top of cladding and around garage doors.
3- Paint exterior cladding so durability is maintained.
4- Install timber blocks to hot water cylinder to prevent movement in conjunction with straps that are already installed.
5- Finishing trims to be installed to interior.
Please provide photos to alpha portal of completed items, once items and all documents are provided CCC application will need to be submitted.

Site Communication: Builder Ethan Clark onsite at time of inspection.

Inspection Summary: Rural site and maintained safe. Inspection considerations included, Building work is basically finished with finishing items to be completed, down pipes clipped and connected to existing storm water tanks, WW to existing system per BC, roof and wall claddings complete with minor finishing trims and painting to be completed to wall cladding, ground clearance good but require attention as mentioned above, smoke alarms installed, bathroom junctions sealed with internal moisture extracted to exterior, as per plan. Please refer to site notes and photos for observations and findings.

Your next inspection will be: **No further inspection required**

Outstanding Required Documents for this Building
Final

- G9: Energy works certificate

History

Inspection Name	Summary
Prepour	NOT APPLICABLE - 06 Oct 2021
Wastepipes	PASS - 18 May 2022
Floor Slab	PASS - 18 May 2022
Framing / Pre-wrap	PASS - 18 May 2022
Post Wrap / Cavity	PASS - 12 Jul 2022
Preline	PASS - 19 Dec 2022
Post Line	PASS - 17 Nov 2022
Internal Membrane	NOT APPLICABLE - 19 Dec 2022
Drainage	PASS - 19 Dec 2022
Final	IN-PROGRESS - 19 Dec 2022
	No further inspection required

Yours Sincerely,



Graeme Mager
Building Services Officer
On behalf of: Kaipara District Council

Notes: North elevation, down pipes clipped and connected to existing storm water tanks



Notes: Smoke alarm working and installed in bedroom



Notes: Bathroom elevation junctions sealed



Notes: Shower elevation, internal moisture extracted to exterior, safety glass to window



Notes: South elevation, terminal vent and ORG installed



Inspection Photos Record on Project 210608

Building: Main Building
Inspection: Framing / Pre-wrap
Question: Have all construction monitoring records and required documents that are required as at this point of the construction process been provided? [These may include: Location certificate; Ground bearing verification; Pipework pressure tests; As-built drawings; Warrantie...
Inspector: Aaron Brown
Timestamp: 2022-05-18 09:42:06
Comment: Garage sleepout



Building: Main Building
Inspection: Framing / Pre-wrap
Question: Have all construction monitoring records and required documents that are required as at this point of the construction process been provided? [These may include: Location certificate; Ground bearing verification; Pipework pressure tests; As-built drawings; Warrantie...
Inspector: Aaron Brown
Timestamp: 2022-05-18 09:42:06
Comment: Lintel top plate and rafter fixings in accordance with the truss and frame manufacturers asbuilts



Building: Main Building
Inspection: Framing / Pre-wrap
Question: Have all construction monitoring records and required documents that are required as at this point of the construction process been provided? [These may include: Location certificate; Ground bearing verification; Pipework pressure tests; As-built drawings; Warrantie...
Inspector: Aaron Brown
Timestamp: 2022-05-18 09:42:06
Comment: bottom plate and brace fixings



Inspection Photos Record on Project 210608

Building: Main Building
Inspection: Framing / Pre-wrap
Question: Have all construction monitoring records and required documents that are required as at this point of the construction process been provided? [These may include: Location certificate; Ground bearing verification; Pipework pressure tests; As-built drawings; Warrantie...
Inspector: Aaron Brown
Timestamp: 2022-05-18 09:42:06
Comment: bottom plate fixings



Building: Main Building
Inspection: Framing / Pre-wrap
Question: Have all construction monitoring records and required documents that are required as at this point of the construction process been provided? [These may include: Location certificate; Ground bearing verification; Pipework pressure tests; As-built drawings; Warrantie...
Inspector: Aaron Brown
Timestamp: 2022-05-18 09:42:06
Comment: all internal bottom plates bolted



Building: Main Building
Inspection: Framing / Pre-wrap
Question: Have all construction monitoring records and required documents that are required as at this point of the construction process been provided? [These may include: Location certificate; Ground bearing verification; Pipework pressure tests; As-built drawings; Warrantie...
Inspector: Aaron Brown
Timestamp: 2022-05-18 09:42:06
Comment: roof strap bracing installed



Inspection Photos Record on Project 210608

Building: Main Building
Inspection: Framing / Pre-wrap
Question: Have all construction monitoring records and required documents that are required as at this point of the construction process been provided? [These may include: Location certificate; Ground bearing verification; Pipework pressure tests; As-built drawings; Warrantie...
Inspector: Aaron Brown
Timestamp: 2022-05-18 09:42:06
Comment: Dragon ties



Building: Main Building
Inspection: Framing / Pre-wrap
Question: Have all construction monitoring records and required documents that are required as at this point of the construction process been provided? [These may include: Location certificate; Ground bearing verification; Pipework pressure tests; As-built drawings; Warrantie...
Inspector: Aaron Brown
Timestamp: 2022-05-18 09:42:06
Comment: direct fixed timber ceiling battens will be installed for bottom cord restraints



Building: Main Building
Inspection: Framing / Pre-wrap
Question: Have all construction monitoring records and required documents that are required as at this point of the construction process been provided? [These may include: Location certificate; Ground bearing verification; Pipework pressure tests; As-built drawings; Warrantie...
Inspector: Aaron Brown
Timestamp: 2022-05-18 09:42:06
Comment: stud to bottom plate straps installed and bottom plates bolted



Inspection Photos Record on Project 210608

Building: Main Building
Inspection: Framing / Pre-wrap
Question: Have all construction monitoring records and required documents that are required as at this point of the construction process been provided? [These may include: Location certificate; Ground bearing verification; Pipework pressure tests; As-built drawings; Warrantie...
Inspector: Aaron Brown
Timestamp: 2022-05-18 09:42:06
Comment: purlins at 900 crs



Building: Main Building
Inspection: Preline
Question: Have all construction monitoring records and required documents that are required as at this point of the construction process been provided? [These may include: Location certificate; Ground bearing verification; Pipework pressure tests; As-built drawings; Warrantie...
Inspector: John Edwards
Timestamp: 2022-09-15 15:36:34
Comment: Preline - moisture #1 15/09/22



Building: Main Building
Inspection: Preline
Question: Have all construction monitoring records and required documents that are required as at this point of the construction process been provided? [These may include: Location certificate; Ground bearing verification; Pipework pressure tests; As-built drawings; Warrantie...
Inspector: John Edwards
Timestamp: 2022-09-15 15:36:34
Comment: Preline - wall and ceiling insulation#2 15/09/22



Inspection Photos Record on Project 210608

Building: Main Building
Inspection: Preline
Question: Have all construction monitoring records and required documents that are required as at this point of the construction process been provided? [These may include: Location certificate; Ground bearing verification; Pipework pressure tests; As-built drawings; Warrantie...
Inspector: John Edwards
Timestamp: 2022-09-15 15:36:34
Comment: Preline - R2.2 wall #3 15/09/22



Building: Main Building
Inspection: Preline
Question: Have all construction monitoring records and required documents that are required as at this point of the construction process been provided? [These may include: Location certificate; Ground bearing verification; Pipework pressure tests; As-built drawings; Warrantie...
Inspector: John Edwards
Timestamp: 2022-09-15 15:36:34
Comment: Preline - R3.2 #4 15/09/22



Building: Main Building
Inspection: Preline
Question: Have all construction monitoring records and required documents that are required as at this point of the construction process been provided? [These may include: Location certificate; Ground bearing verification; Pipework pressure tests; As-built drawings; Warrantie...
Inspector: John Edwards
Timestamp: 2022-09-15 15:36:34
Comment: Preline - bute line pipe work is siliconed .#5 15/09/22



Inspection Photos Record on Project 210608

Building: Main Building
Inspection: Preline
Question: Is the installation of the water supply service compliant? [Check: LBP details are recorded; Hot and cold water supply is compliant - materials, jointing, pipe sizes, pipe run & support, insulation, valving, sealing of penetrations, back-flow protection; Pipework t...
Inspector: John Edwards
Timestamp: 2022-09-15 15:36:34
Comment: Preline - 1500kpa#1 15/09/22



Building: Main Building
Inspection: Preline
Question: Is the installation of the water supply service compliant? [Check: LBP details are recorded; Hot and cold water supply is compliant - materials, jointing, pipe sizes, pipe run & support, insulation, valving, sealing of penetrations, back-flow protection; Pipework t...
Inspector: John Edwards
Timestamp: 2022-09-15 15:36:34
Comment: Preline - HWC pipe work #2 15/09/22



Building: Main Building
Inspection: Preline
Question: Is the installation of the water supply service compliant? [Check: LBP details are recorded; Hot and cold water supply is compliant - materials, jointing, pipe sizes, pipe run & support, insulation, valving, sealing of penetrations, back-flow protection; Pipework t...
Inspector: John Edwards
Timestamp: 2022-09-15 15:36:34
Comment: Preline -150mm centres fixings to edges ,200mm to centre #3 15/09/22



Inspection Photos Record on Project 210608

Building: Main Building
Inspection: Preline
Question: Is the installation of the water supply service compliant? [Check: LBP details are recorded; Hot and cold water supply is compliant - materials, jointing, pipe sizes, pipe run & support, insulation, valving, sealing of penetrations, back-flow protection; Pipework t...
Inspector: John Edwards
Timestamp: 2022-09-15 15:36:34
Comment: Preline - #4 15/09/22



Building: Main Building
Inspection: Preline
Question: Is the installation of the water supply service compliant? [Check: LBP details are recorded; Hot and cold water supply is compliant - materials, jointing, pipe sizes, pipe run & support, insulation, valving, sealing of penetrations, back-flow protection; Pipework t...
Inspector: John Edwards
Timestamp: 2022-09-15 15:36:34
Comment: Preline - #5 15/09/22



Building: Main Building
Inspection: Final
Question: Have all construction monitoring records and required documents that are required as at this point of the construction process been provided? [These may include: Location certificate; Ground bearing verification; Pipework pressure tests; As-built drawings; Warrantie...
Inspector: Graeme Mager
Timestamp: 2022-12-19 10:34:12
Comment: North elevation, down pipes clipped and connected to existing storm water tanks



Inspection Photos Record on Project 210608

Building: Main Building
Inspection: Final
Question: Have all construction monitoring records and required documents that are required as at this point of the construction process been provided? [These may include: Location certificate; Ground bearing verification; Pipework pressure tests; As-built drawings; Warrantie...
Inspector: Graeme Mager
Timestamp: 2022-12-19 10:34:12
Comment: Smoke alarm working and installed in bedroom



Building: Main Building
Inspection: Final
Question: Have all construction monitoring records and required documents that are required as at this point of the construction process been provided? [These may include: Location certificate; Ground bearing verification; Pipework pressure tests; As-built drawings; Warrantie...
Inspector: Graeme Mager
Timestamp: 2022-12-19 10:34:12
Comment: Bathroom elevation junctions sealed



Building: Main Building
Inspection: Final
Question: Have all construction monitoring records and required documents that are required as at this point of the construction process been provided? [These may include: Location certificate; Ground bearing verification; Pipework pressure tests; As-built drawings; Warrantie...
Inspector: Graeme Mager
Timestamp: 2022-12-19 10:34:12
Comment: Shower elevation, internal moisture extracted to exterior, safety glass to window



Inspection Photos Record on Project 210608

Building: Main Building
Inspection: Final
Question: Have all construction monitoring records and required documents that are required as at this point of the construction process been provided? [These may include: Location certificate; Ground bearing verification; Pipework pressure tests; As-built drawings; Warrantie...
Inspector: Graeme Mager
Timestamp: 2022-12-19 10:34:12
Comment: South elevation, terminal vent and ORG installed



KAIPARA DISTRICT
Kaipara te Oranganui • Two Oceans Two Harbours

Onsite application for minor variations to approved plans

This application is to advise Kaipara District Council that the following minor variation is proposed to be undertaken on the building situated at the address listed below. Please refer to the government's website for guidance information about what constitutes a minor variation. https://www.building.govt.nz It is the owners (or their authorised agents) responsibility to notify Council of any changes to the approved plans; this variation must be provided to, **and** be approved by the Building Inspector on site. All changes must be approved before work proceeds.

Building consent No.	BC210608.1	Reference No.		Plan No.	Shts 2-4, 6 & 8.
Site Address:	752 Settlement Road Kaiwaka				
Owner/agents name:	Gina Utting				
Postal address:	752 Settlement Road Kaiwaka Postcode:				
Email address	ginautting@gmail.com				
Applicants role in project	Owner				
Contact telephone	0212670724				

Record of variation: *(please identify location and provide a detailed description of the variation)*

☑ Two copies of plans must accompany application *(must be handed to Inspector for inspection to proceed)*

☑ A certificate of design work is required for minor variations where Restricted Building Work is involved.

☑ Product Variations must be agreed to by the owner in writing (insulation, plasterboard changes etc.)

Note: *Owners need to be made aware of product variations and the BCA requires written evidence of this. Significant change is not a minor variation but a formal amendment. No work may proceed for formal amendments until processed, stamped approved plans are on site. If work has been completed, no consent can be issued as this is a breach of the Building Act. In this case, infringement & C.O.A requirements may apply.*

Description of change:
Due to unavailability of consented cladding (Shadowclad) the cladding is changed to Hardies Axon Board on cavity. Paint finish. Refer sheets 2,3,4, 6 and 8/ Rev B.

Owner signature:			
Agents signature:	R Swain	Date:	16.3.220

Please use this table for describing changes to bracing elements, window sizes, etc.

IM:vrh

KDC - Approved Building Consent Document - 210608 - Minor Variation for cladding change to Axon Board on Cavity - Pg 1 of 58 - 4/04/2022 - aaron.brown

KAIPARA DISTRICT

Was	*Reason for changes: altered, removed, replaced, deleted*	*Now*

☐ Reduced scope of work (if ticked, please describe items that will not be constructed.

Council use only:

The variation is minor and does not materially affect compliance ☑ Yes ☐ No

Work may proceed ☑ Yes ☐ No

Variation ☑ Approved ☐ Declined

Inspector's signature: _____ Date: 4th April 2022

Inspector's name: Aaron Brown

Note: If the scope of work has been reduced, please check the computer to see whether an update is required to the description of work.

KDC - Approved Building Consent Document - 210608 - Minor Variation for cladding change to Axon Board on Cavity - Pg 2 of 58 - 4/04/2022 - aaron.brown

IM:vrh

KDC - Approved Building Consent Document - 210608 - Minor Variation for cladding change to Axon Board on Cavity - Pg 3 of 58 - 4/04/2022 - aaron.brown

Memorandum from licensed building practitioner: Certificate of design work

Section 45 and section 30C, Building Act 2004

Please fill in the form as fully and correctly as possible.

If there is insufficient room on the form for requested details, please continue on another sheet and attach the additional sheet(s) to this form.

THE BUILDING	
Street address: 752 Settlement Rd	
Suburb: Kaiwaka	
Town/City: Auckland	Postcode:

THE OWNER(S)	
Name(s): Gina Utting	
Mailing address: 752 Settlement Rd	
Suburb: Kaiwaka	PO Box/Private Bag:
Town/City: Auckland	Postcode:
Phone number:	Email address: ginautting@gmail.com

KDC - Approved Building Consent Document - 210608 - Minor Variation for cladding change to Axon Board on Cavity - Pg 4 of 58 - 4/04/2022 - aaron.brown

BASIS FOR PROVIDING THIS MEMORANDUM

I am providing this memorandum in my role as the: Please tick the option that applies ✓

- ☑ **sole** designer of all of the RBW design outlined in this memorandum – I carried out all of the RBW design work myself – no other person will be providing any additional memoranda for the project
- ☐ **lead** designer who carried out some of the RBW design myself but also supervised other designers – this memorandum covers their RBW design work as well as mine, and **no other** person will be providing any additional memoranda for the project
- ☐ **lead** designer for all but specific elements of RBW – this memorandum only covers the RBW design work that I carried out or supervised and the **other** designers will provide their own memorandum relating to their specific RBW design
- ☐ **specialist** designer who carried out specific elements of RBW design work as outlined in this memorandum – other designers will be providing a memorandum covering the remaining RBW design work

IDENTIFICATION OF DESIGN WORK THAT IS RESTRICTED BUILDING WORK (RBW)

I Russell Swain carried out / supervised the following design work that is restricted building work

PRIMARY STRUCTURE: B1

Design work that is RBW	Description of RBW	Carried out or supervised	Reference to plans and specifications
Tick ✓ if included. Cross ☒ if excluded	If appropriate, provide details of the RBW	Tick ✓ whether you carried out this design work or supervised someone else carrying out this design work	If appropriate, specify references
All RBW design work relating to B1 ☒		☐ Carried out ☐ Supervised	
Foundations and subfloor framing ☒		☐ Carried out ☐ Supervised	

KDC - Approved Building Consent Document - 210608 - Minor Variation for cladding change to Axon Board on Cavity - Pg 5 of 58 - 4/04/2022 - aaron.brown

Design work that is RBW	Description of RBW	Carried out or supervised	Reference to plans and specifications
Tick ✓ if included. Cross ✗ if excluded	If appropriate, provide details of the RBW	Tick ✓ whether you carried out this design work or supervised someone else carrying out this design work	If appropriate, specify references
Walls ✗		◯ Carried out ◯ Supervised	
Roof ✗		◯ Carried out ◯ Supervised	
Columns and beams ✗		◯ Carried out ◯ Supervised	
Bracing ✗		◯ Carried out ◯ Supervised	
Other ✗		◯ Carried out ◯ Supervised	

KDC - Approved Building Consent Document - 210608 - Minor Variation for cladding change to Axon Board on Cavity - Pg 6 of 58 - 4/04/2022 - aaron.brown

Design work that is RBW	Description of RBW	Carried out or supervised	Reference to plans and specifications
Tick ✓ if included. Cross ✗ if excluded	If appropriate, provide details of the RBW	Tick ✓ whether you carried out this design work or supervised someone else carrying out this design work	If appropriate, specify references
EXTERNAL MOISTURE MANAGEMENT SYSTEMS: E2			
All RBW design work relating to E2 ✓	Cladding changed from plywood to Hardies Axon Board on cavity.	◉ Carried out ○ Supervised	Shts 2-4, 6 &8
Damp proofing ✗		○ Carried out ○ Supervised	
Roof cladding or roof cladding system ✗		○ Carried out ○ Supervised	
Ventilation system (for example, subfloor or cavity) ✓	Cavity system to cavity.	◉ Carried out ○ Supervised	
Wall cladding or wall cladding system ✗		○ Carried out ○ Supervised	
Waterproofing ✗		○ Carried out ○ Supervised	
Other ✗		○ Carried out ○ Supervised	

KDC - Approved Building Consent Document - 210608 - Minor Variation for cladding change to Axon Board on Cavity - Pg 7 of 58 - 4/04/2022 - aaron.brown

Design work that is RBW	Description of RBW	Carried out or supervised	Reference to plans and specifications
Tick ✓ if included. Cross ✗ if excluded	If appropriate, provide details of the RBW	Tick ✓ whether you carried out this design work or supervised someone else carrying out this design work	If appropriate, specify references
FIRE SAFETY SYSTEMS: C1 - C6			
Emergency warning systems Evacuation and fire service operation systems ☒ Suppression or control systems Other		○ Carried out ○ Supervised	

Note: The design of fire safety systems is only restricted building work when it involves small-to-medium apartment buildings as defined by the Building (Definition of Restricted Building Work) Order 2011.

WAIVERS AND MODIFICATIONS

Waivers or modifications of the Building Code are required. ○ Yes ◉ No

If Yes, provide details of the waivers or modifications below:

Clause	Waiver/modification required
List relevant clause numbers of building code	Specify nature of waiver or modification of building code required

KDC - Approved Building Consent Document - 210608 - Minor Variation for cladding change to Axon Board on Cavity - Pg 8 of 58 - 4/04/2022 - aaron.brown

ISSUED BY

Name and contact details of the licensed building practitioner who is licensed to carry out or supervise design work that is restricted building work.

Name: Russell Swain	LBP or Registration number: BP113899
The practitioner is a: (●) Design LBP ( ) Registered architect ( ) Chartered professional engineer	
Design Entity or Company (optional):	
Mailing address (if different from below):	
Street address/Registered office: 62 Waimarie St	
Suburb: St Heliers	Town/City: Auckl;and
PO Box/Private Bag:	Postcode:
Phone number:	Mobile: 0212519309
After hours:	Fax:
Email address: russellswain@habitatdesign.co.nz	Website:

DECLARATION

I Russell Swain LBP, state that I have applied the skill and care reasonably required of a competent design professional in carrying out or supervising the Restricted Building Work (RBW) described in this form, and that based on this, I also state that the RBW:

- Complies with the building code, or
- Complies with the building code subject to any waiver or modification of the building code recorded on this form

Signature: R Swain

Date: 16.3.22

KDC - Approved Building Consent Document - 210608 - Minor Variation for cladding change to Axon Board on Cavity - Pg 9 of 58 - 4/04/2022 - aaron.brown

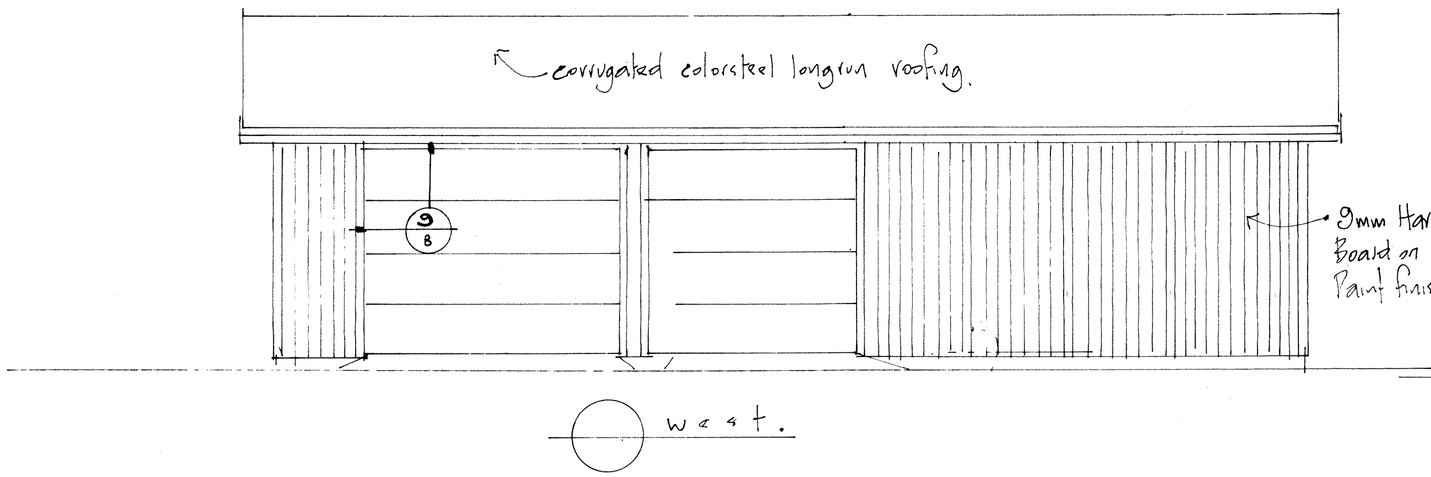

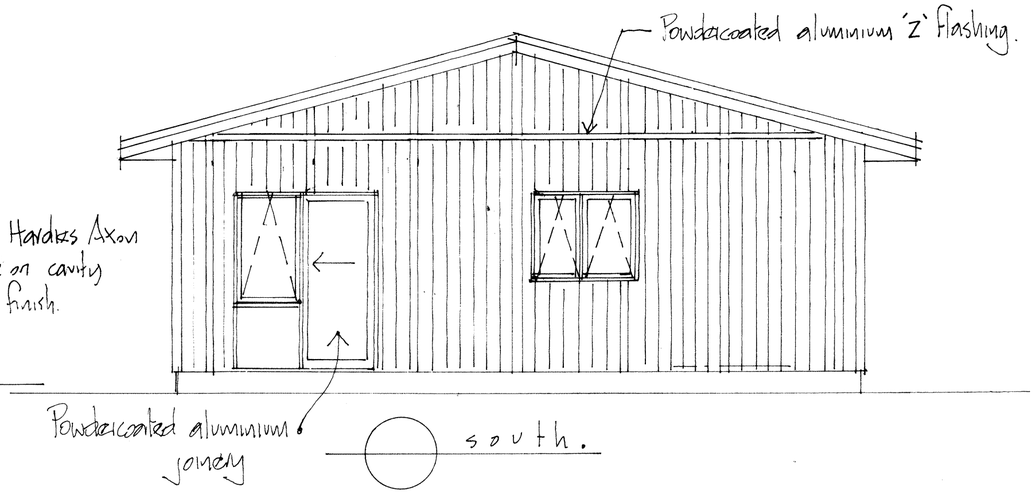

	ALL											
Risk factor	**Low**		**Medium**		**High**		**Very high**		**Subtotals for each risk factor**
Wind zone	0		0		1	1	2		1
Number of storeys	0	0	1		2		4		0
Roof/wall intersection design	0	0	1		3		5		0
Eaves width	0		1		2		5		5
Envelope complexity	0	0	1		3		6		0
Deck design	0	0	2		4		6		0
								Total risk score:	6

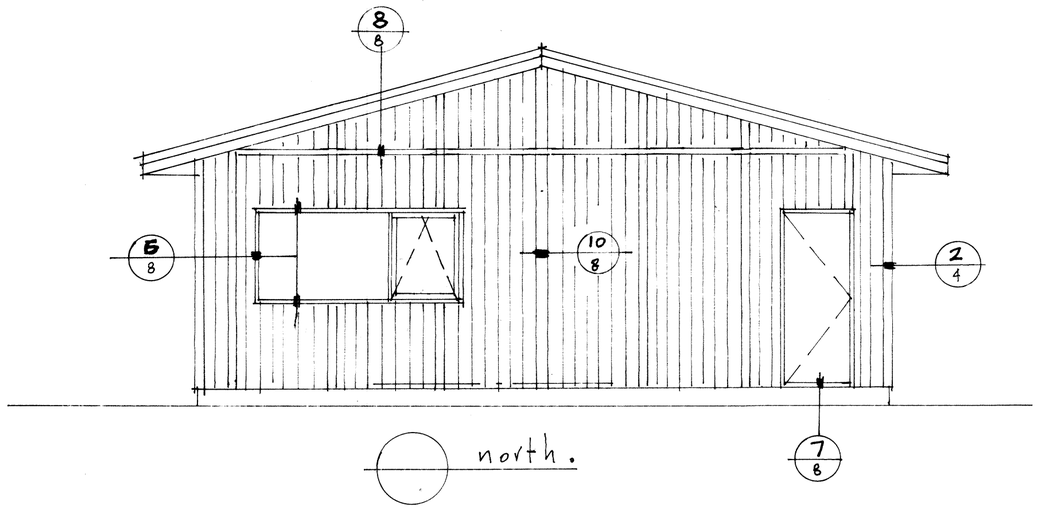

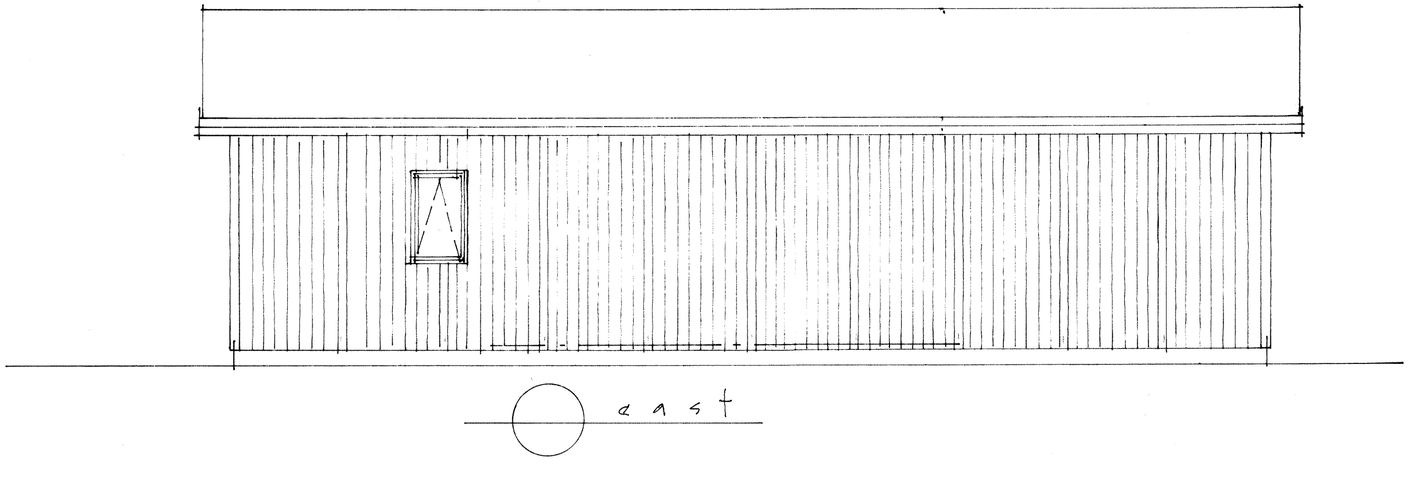

Rev	Date	Issue
B	3/22	as noted.
A	9/21	Bldg Application

Habitat Design Ltd
Architectural Designers
PO Box 25 715
St Heliers, Auckland
021 2519309
Email: russellswain@habitatdesign.co.nz

Client
GINA UTTING

Project
PROPOSED NEW GARAGE/SLEEPOUT
752 SETTLEMENT ROAD
KAIWAKA
AUCKLAND

Drwg
ELEVATIONS

Scale	Sheet No
1:50	**2**
Date: SEPT'21	Issue: B

KDC - Approved Building Consent Document - 210608 - Minor Variation for cladding change to Axon Board on Cavity - Pg 10 of 58 - 4/04/2022 - aaron.brown

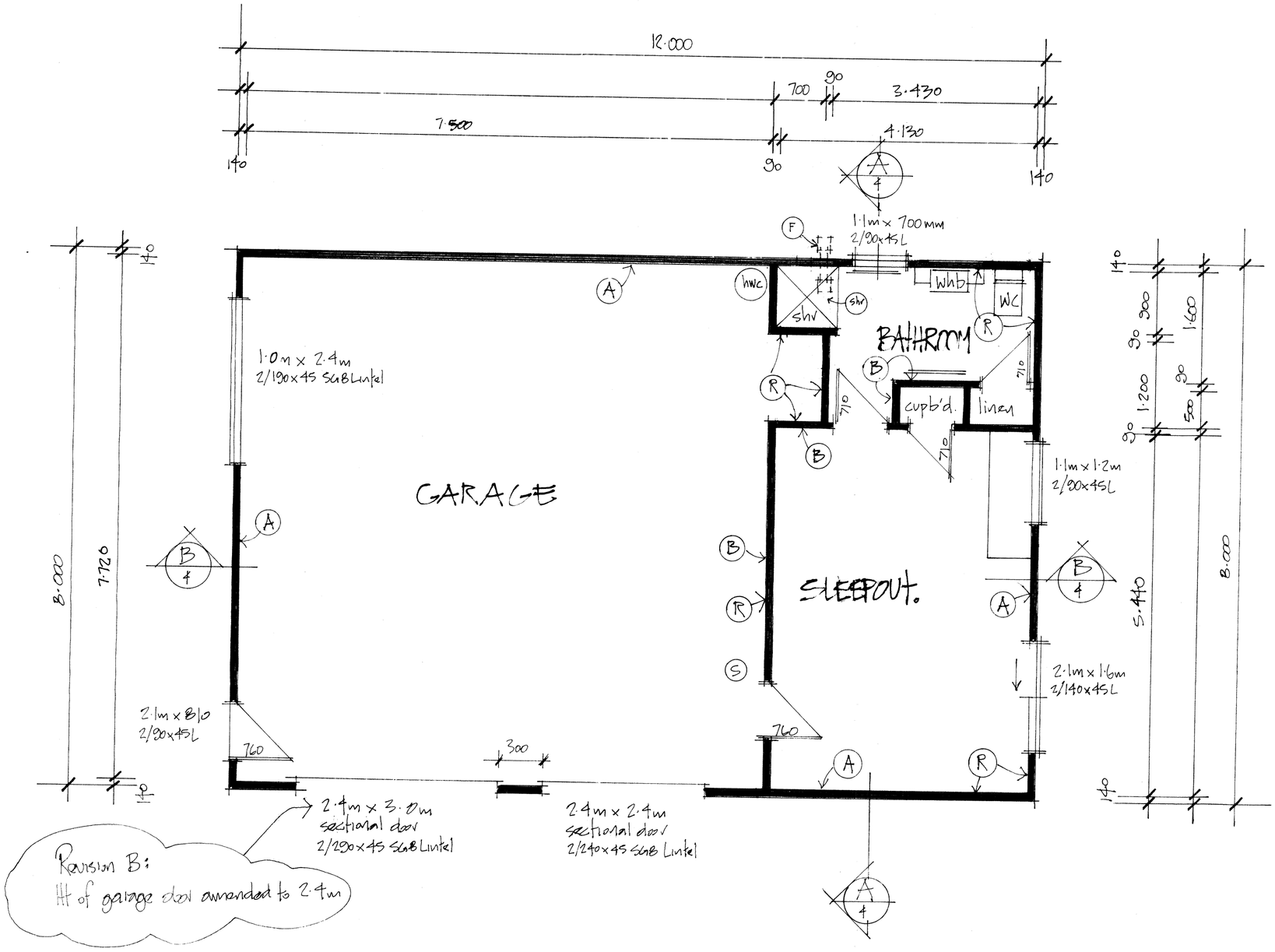

LEGEND

- A — External - 90x45 SG8 studs at 400mm c/c.
- B — Internal - 90x45 SG8 studs at 600mm c/c.
- S — Ensure ceiling mounted smoke alarm – to be 3m maximum from sleep out door.
- F — Extract fan ducted to soffit.
- Shw — Proprietary shower (acrylic walls and tray).
- R — Note: Sleepout/Bathroom to insulated complying with NZS 4218 Schedule Method.
  Walls – R2.2 fibreglass batt.
  Ceiling – R3.2 fibreglass batt.

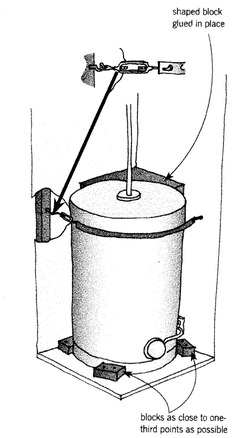

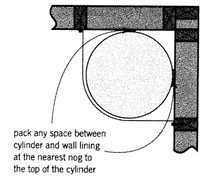

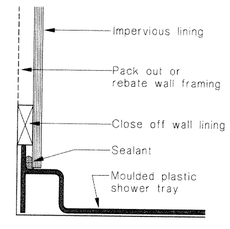

(b) Moulded plastic shower tray

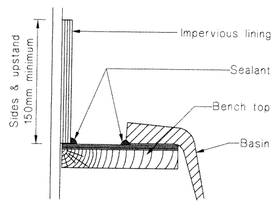

(b) Tub, sink and basin

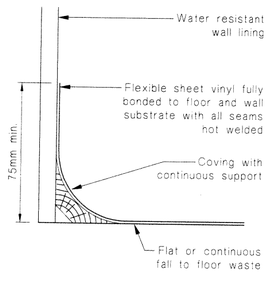

(a) Vinyl floor covering

A	9/21	Bldg Application
Rev	Date	Issue

Habitat Design Ltd
Architectural Designers
PO Box 25 715
St Heliers, Auckland
021 2519309
Email: russellswain@habitatdesign.co.nz

Client
GINA UTTING

Project
PROPOSED NEW GARAGE/SLEEPOUT
752 SETTLEMENT ROAD
KAIWAKA
AUCKLAND

Drwg
FLOOR PLAN

Scale	Sheet No
1:50	3
Date	Issue
SEPT'21	B

KDC - Approved Building Consent Document - 210608 - Minor Variation for cladding change to Axon Board on Cavity - Pg 11 of 58 - 4/04/2022 - aaron.brown

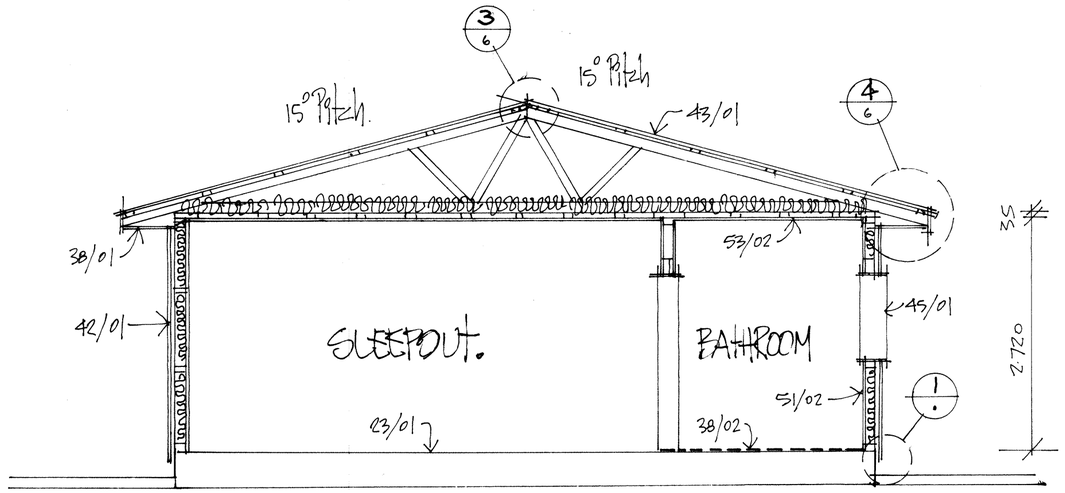

SECTION A

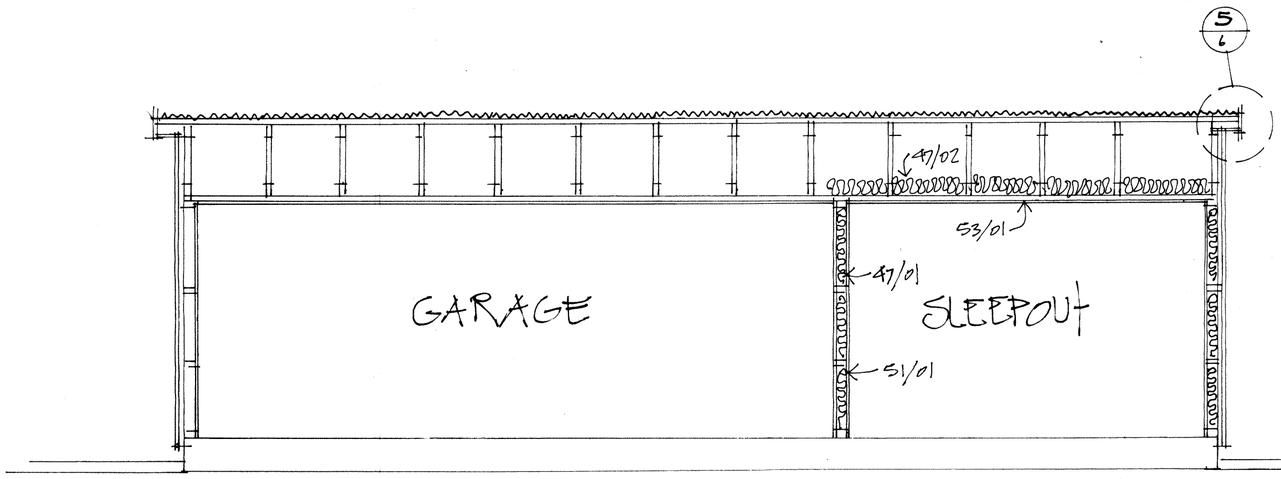

SECTION B

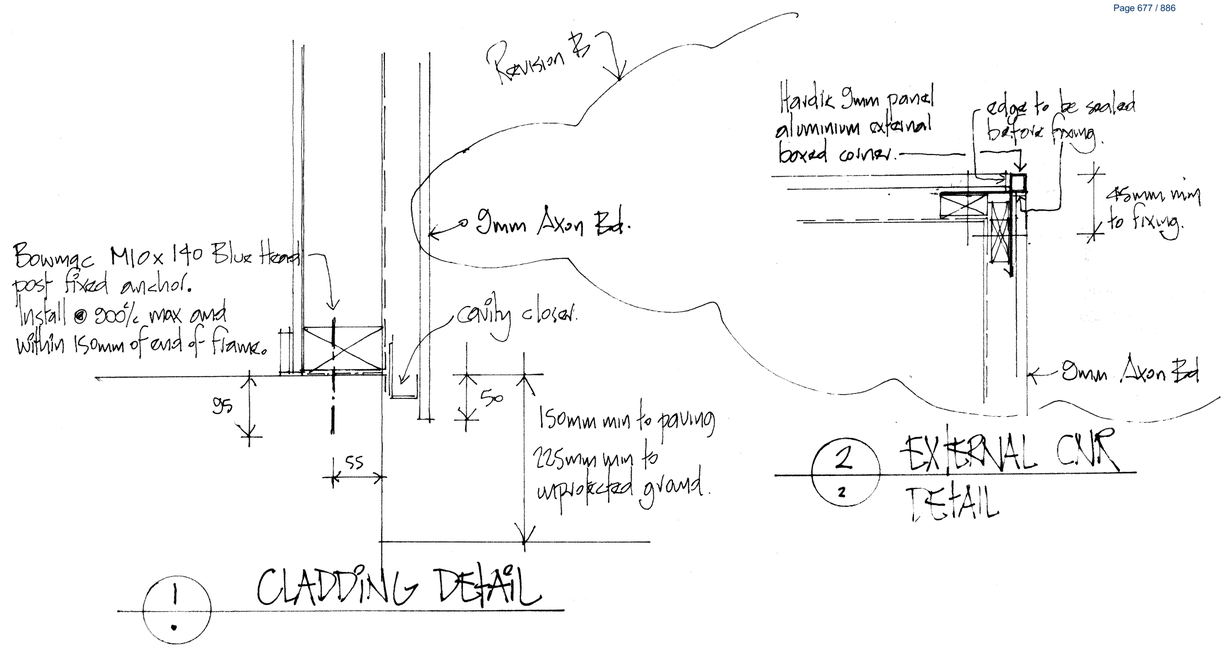

LEGEND	
(00) General	
	PAINTING/STAINING: Owner to confirm finish/colour to all exposed surfaces/linings.
(23) Foundation	
23/01	WAFFLE SLAB: 100mm concrete topping screed (SE72 mesh) on 220mm polystyrene pods on DPC on 50mm minimum sand blinding. Refer Foundation Plan/sht 5.
(38) Timber	
38/01	6mm Hardiflex soffit lining, paint finish.
38/02	Vinyl floor finish to bathroom.
(42) External Walls	
42/01	9mm Hardies Axon Board cladding on ex50mm x 25mm H3.1tan vertical battens at 600mm c/c maximum on Thermakraft Watergate Plus building wrap.
(43) Roof	
43/01	Corrugated Coloursteel longrun roofing on Thermakraft 215 roof underlay on 70x45mm H1.2 SG8 purlins at 900mm c/c maximum (fixing 1/10g self drilling screw x 80mm long) on rafters/trusses at 900mm c/c.
(45) Windows and Doors	
45/01	New powder coated double glazed aluminum joinery. Manufacturer Vantage Aluminium.
(47) Insulation	
47/01	R2.2 90mm fibreglass batts to wall cavity.
47/02	R3.2 180mm fibreglass insulation flat ceilings.
(51) Partitions and Linings	
51/01	10mm Standard GIB BD wall lining.
51/02	13mm Aqualine to wet areas. Nb: refer sheet 7for wall bracing plan.
(53) Ceilings	
53/01	13mm standard GIB BOARD ceiling lining on 70x35mm timber battens at 600mm c/c maximum.
53/02	13mm Aqualine GIB BOARD ceiling lining on 70x35mm timber battens at 600mm c/c maximum.

Rev	Date	Issue
B	3/22	As noted.
A	9/21	Bldg Application

Habitat Design Ltd
Architectural Designers
PO Box 25 715
St Heliers, Auckland
021 2519309
Email: russellswain@habitatdesign.co.nz

Client: GINA UTTING

Project: PROPOSED NEW GARAGE/SLEEPOUT
752 SETTLEMENT ROAD
KAIWAKA
AUCKLAND

Drwg: SECTIONS A & B

Scale: 1:50

Sheet No: 4

Date: SEPT'21

Issue: B

KDC - Approved Building Consent Document - 210608 - Minor Variation for cladding change to Axon Board on Cavity - Pg 12 of 58 - 4/04/2022 - aaron.brown

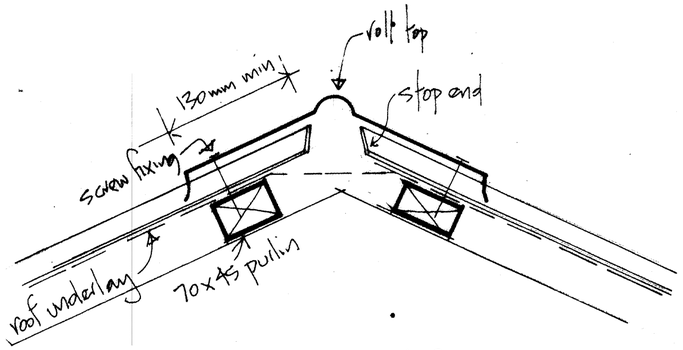

RIDGE DETAIL 3/4

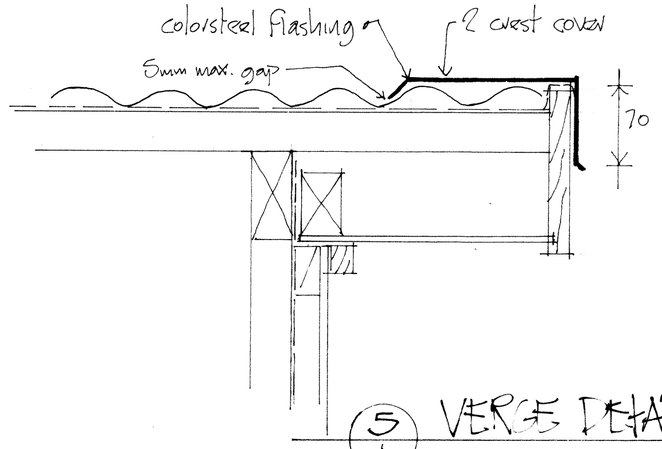

5/4 VERGE DETAIL

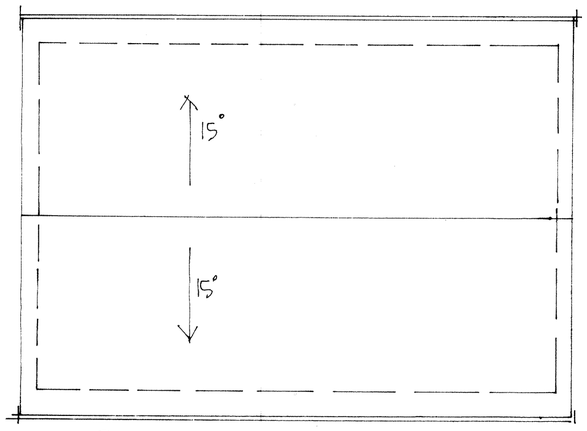

ROOF PLAN

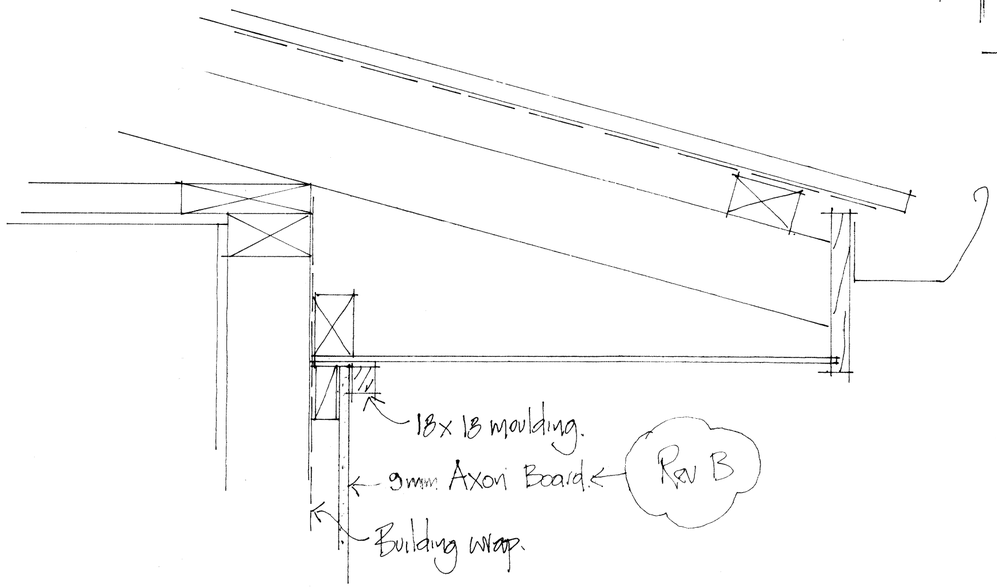

EAVE DETAIL 4/4

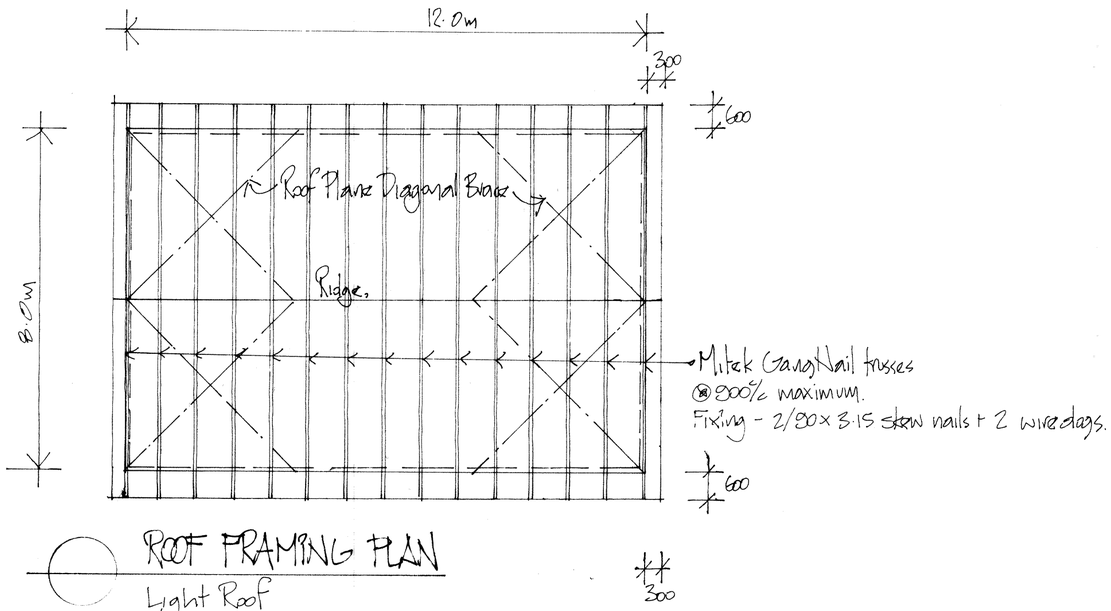

ROOF FRAMING PLAN

Light Roof
15° Pitch
High Wind Zone.

B	3/22	as noted.
A	9/21	Bldg Application
Rev	Date	Issue

Habitat Design Ltd
Architectural Designers
PO Box 25 715
St Heliers, Auckland
021 2519309
Email: russellswain@habitatdesign.co.nz

Client
GINA UTTING

Project
PROPOSED NEW GARAGE/SLEEPOUT
752 SETTLEMENT ROAD
KAIWAKA
AUCKLAND

Drwg
ROOF FRAMING PLAN & DETAILS

Scale	Sheet No
1:50	6
Date: SEPT'21	Issue: B

KDC - Approved Building Consent Document - 210608 - Minor Variation for cladding change to Axon Board on Cavity - Pg 13 of 58 - 4/04/2022 - aaron.brown

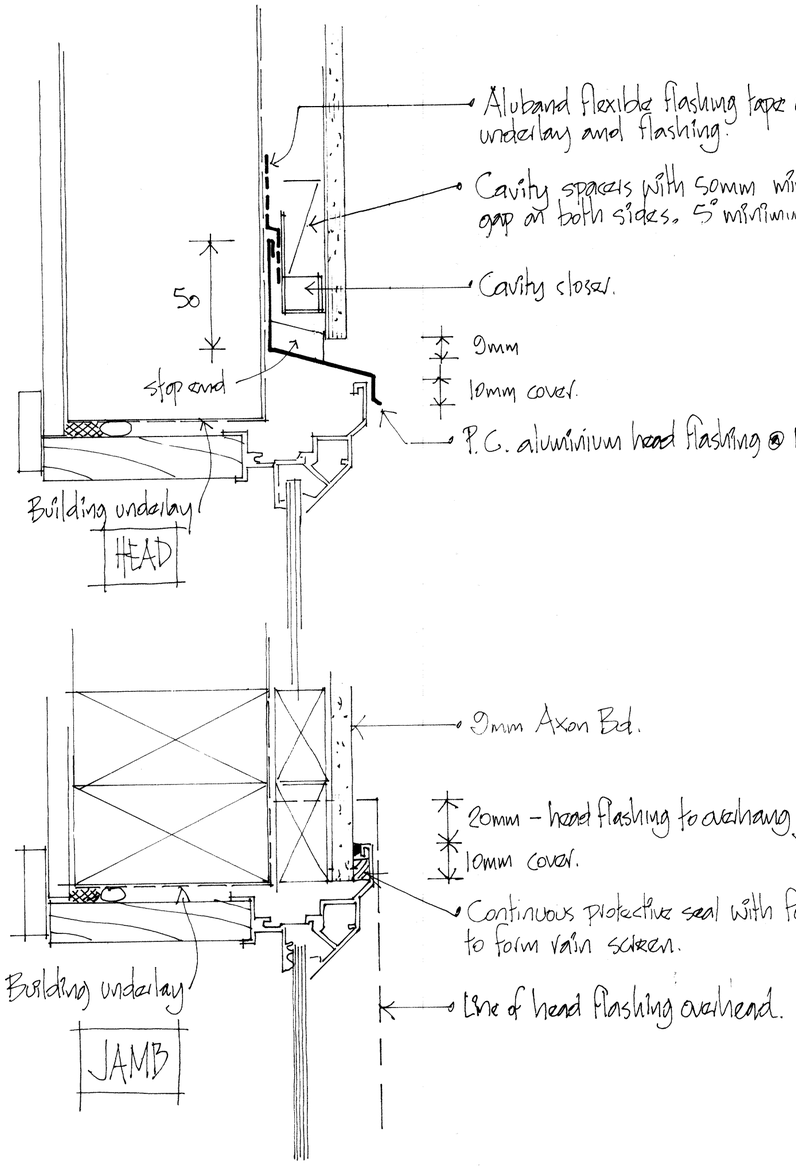

ALUMINIUM JOINERY DETAIL 6/2

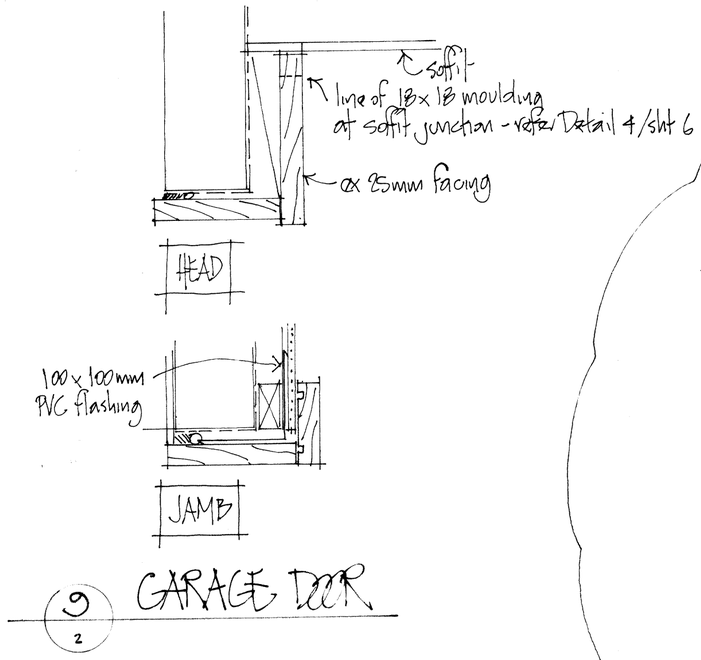

9/2 GARAGE DOOR

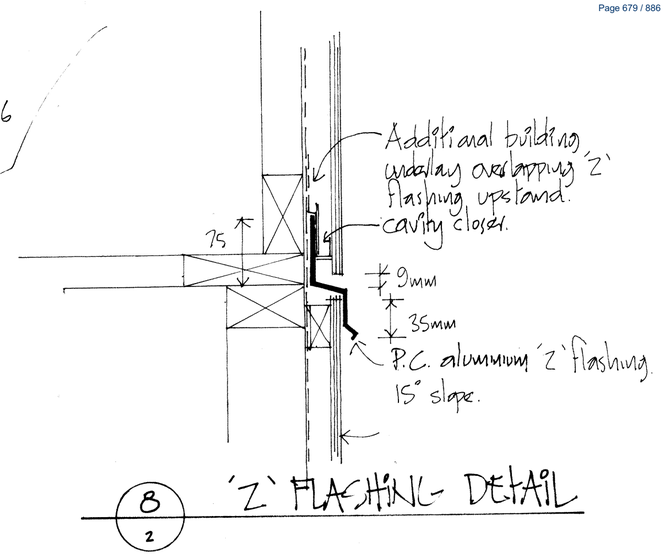

8/2 'Z' FLASHING DETAIL

Revision B

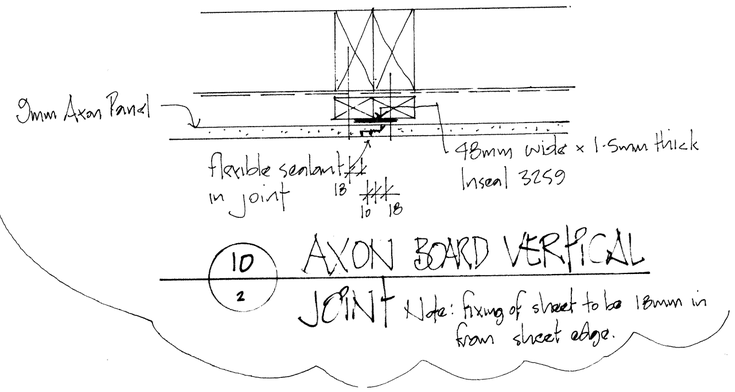

10/2 AXON BOARD VERTICAL JOINT

Note: fixing of sheet to be 18mm in from sheet edge.

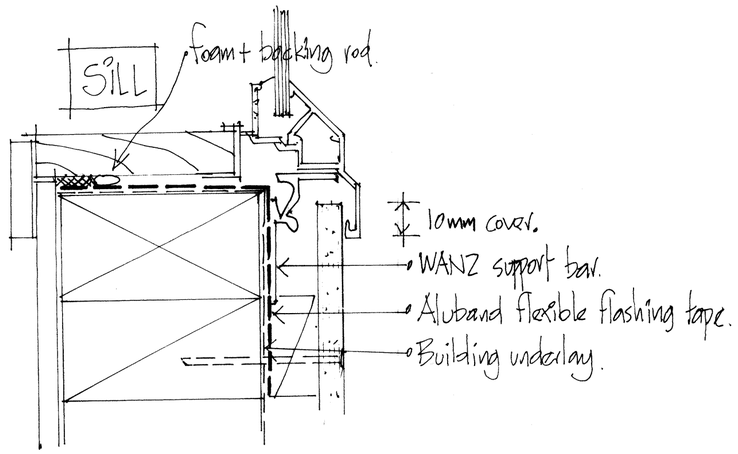

Figure 72B: General window and door opening with drainage cavity

NOTE:
(1) Detailed *cladding* omitted for clarity, refer to specific *claddings*.
(2) Head to be treated similarly with continuous *wall underlay* and *flexible tape* at corners.
(3) Refer individual cladding details for jamb flashings.

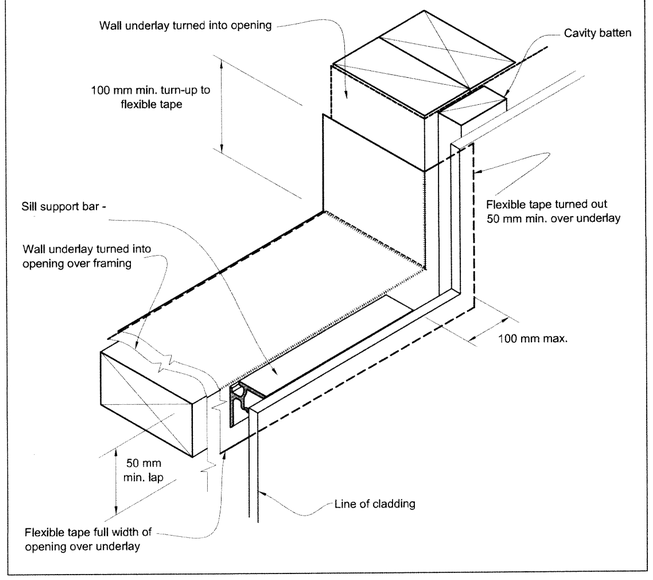

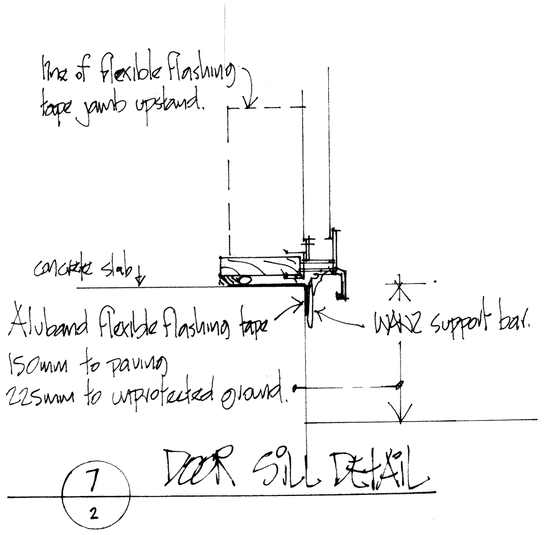

7/2 DOOR SILL DETAIL

Rev	Date	Issue
B	3/22	as noted.
A	9/21	Bldg Application

Habitat Design Ltd
Architectural Designers
PO Box 25 715
St Heliers, Auckland
021 2519309
Email: russellswain@habitatdesign.co.nz

Client	GINA UTTING
Project	PROPOSED NEW GARAGE/SLEEPOUT 752 SETTLEMENT ROAD KAIWAKA AUCKLAND
Drwg	DETAILS
Scale 1:5	Sheet No **8**
Date SEPT'21	Issue B

JamesHardie™

jameshardie.co.nz

Axon™ Panel
EasyLap™ Panel

Timber Cavity Batten

Technical Specification

February 2022 New Zealand



KDC - Approved Building Consent Document - 210608 - Minor Variation for cladding change to Axon Board on Cavity - Pg 14 of 58 - 4/04/2022 - aaron brown

KDC - Approved Building Consent Document - 210608 - Minor Variation for cladding change to Axon Board on Cavity - Pg 15 of 58 - 4/04/2022 - aaron brown



We value your feedback!

To continue with the development of our products and systems, we value your input. Please send any suggestions, including your name, contact details, and relevant sketches to:

Ask James Hardie™
literaturefeedback@jameshardie.co.nz

Make sure your information is up to date

When specifying or installing Hardie™ fibre cement products, ensure that you have the current manual. Additional installation information, warranties and warnings are available at **www.jameshardie.co.nz** or **Ask James Hardie™ on 0800 808 868.**

THIS TECHNICAL SPECIFICATION IS FOR AXON™ PANEL/ EASYLAP™ PANEL FIXED OVER TIMBER CAVITY BATTEN.

KDC - Approved Building Consent Document - 210608 - Minor Variation for cladding change to Axon Board on Cavity - Pg 16 of 58 - 4/04/2022 - aaron.brown

Contents

1 Application and Scope 4

1.1 Application 4
1.2 Scope 4
1.3 Details 5
1.4 Specific Design 5

2 Design 5

2.1 Compliance 5
2.2 Responsibility 5
2.3 Site and Foundation 5
2.4 Surface Clearances 6
2.5 Moisture Management 6
2.6 Structure 6
2.6.1 Timber Framing 6
2.6.2 Wind Loading 6
2.7 Bracing 6
2.8 Fire Rated Walls 6
2.9 Energy Efficiency 7

3 Framing 7

3.1 General 7
3.2 Timber Framing 7
3.2.1 Dimensions 7
3.2.2 Structural Grade 7
3.2.3 Durability 8
3.2.4 Frame Construction 8
3.3 Steel Framing 8
3.3.1 Dimensions and Gauge 8
3.3.2 Durability 8
3.3.3 Frame Construction 8
3.4. Cavity Construction Method 8
3.5 Special Framing Requirements 8
3.6 Tolerances 8

4 Preparation 9

4.1 Flexible Underlay or HomeRAB™ Pre-Cladding 9
4.2 RAB™ Board or Rigid Air Barrier 9
4.3 Vent Strip 9
4.4 Cavity Battens 9
4.5 Intermediate Support 9
4.6 Flashings 10

5 Panel Fixing 10

5.1 General 10
5.2 Fastener Durability 10
5.3 Fastener – Size and Layout 11
5.4 Panel Layout 11

6 Jointing 11

6.1 General 11
6.2 Vertical Joint 11
6.3 Horizontal Joint 12
6.4 External Corner 12
6.5 Internal Corner 12
6.6 Flashing Material Durability 12

7 Finishing 12

7.1 Preparation 12
7.2 Sealants 12
7.3 Coating 13
7.4 Staining 13

8 Care and Maintenance 13

9 Product information 14

9.1 Manufacturing and Classification 14
9.2 Product Mass 14
9.3 Durability 14
9.3.1 Resistance to Moisture/Rotting 14
9.3.2 Control of External Fire Spread 14
9.3.3 Alpine Regions 14

10 Safe Working Practices 15

10.1 Storage and delivery 17
10.2 Tips for safe and easy handling of Axon and EasyLap Panels 17

11 Accessories 18

12 Details 21

Product Warranty 43

KDC - Approved Building Consent Document - 210608 - Minor Variation for cladding change to Axon Board on Cavity - Pg 17 of 58 - 4/04/2022 - aaron.brown

1 Application and Scope

1.1 Application

Axon™ Panel/EasyLap™ Panel is manufactured by James Hardie using advanced proprietary lightweight cement composition of treated cellulose fibre, portland cement, finely ground sand and water. It is classified as light weight wall cladding suitable for residential and light commercial buildings using timber framed buildings.

- Axon Panel/EasyLap Panel is primed on the face to take a suitable paint finish in any colour.
- Axon Panel 133 Smooth - the grooves on the face panel are nominal 10mm wide x 2.25mm deep and spaced at 133mm centres.
- Axon Panel 133 Grained - the grooves on the face panel are nominal 10mm wide x 2.25mm deep and spaced at 133mm centres. Between the grooves is a look of traditional wood-grain texture.
- Axon Panel 400 Smooth - the grooves on the face panel are nominal 10mm wide x 2.25mm deep and spaced at 400mm centres.
- EasyLap Panel provides a durable, shiplap vertical joint panel appearance for residential/commercial building façades. The panel is finished with a site applied roll on textured acrylic paint to create a rendered look with subtle vertical joint.

Specifier

If you are a specifier or other responsible party for a project ensure that the information in this document is appropriate for the application you are planning and that you undertake specific design and detailing for areas which fall outside the scope of these specifications.

Installer

If you are an installer ensure that you follow the design, moisture management principles, and associated details and material selection provided by the designer. All details provided in this document must be read in conjunction with this specification.

Make sure your information is up to date

When specifying or installing Hardie™ fibre cement products, ensure you have the current manual. If you're not sure you do, or you need more information, visit www.jameshardie.co.nz or Ask James Hardie on 0800 808 868.

1.2 Scope

The scope of this specification covers the use of Axon Panel/EasyLap Panel fixed with timber cavity battens to buildings which fall within the scope limitations of 'Acceptable Solution E2/AS1 paragraph 1.1' of the New Zealand Building Code (NZBC) or the buildings covered by a specific engineering design (SED).

This document is intended for use by architects, designers and specifiers who may be involved with the specification of Axon Panel/EasyLap Panel.

Note: Refer to Axon Panel/EasyLap Panel CLD™ Structural Cavity Batten technical specification for direct fixed or when fixing to CLD Structural Cavity Battens.

KDC - Approved Building Consent Document - 210608 - Minor Variation for cladding change to Axon Board on Cavity - Pg 18 of 58 - 4/04/2022 - aaron.brown

1.3 Details

Various Axon Panel/EasyLap Panel fixed to timber cavity batten figures are provided at the rear of this document. All dimensions shown are in millimetres unless noted otherwise. This specification and details in CAD file are also available for download at www.jameshardie.co.nz.

1.4 Specific Design

For use of Axon Panel/EasyLap Panel outside the published scope, the architect, designer or engineer must undertake specific design. For advice on designs outside the scope of this specification, Ask James Hardie on 0800 808 868.

2 Design

2.1 Compliance

Axon Panel/EasyLap Panel complies with E2 of the NZBC as an alternate solution.

Axon Panel/EasyLap Panel claddings have been independently tested/assessed and meets the performance requirements of the NZBC. Axon Panel/Easylap Panel installed as per the details and information published in this technical specification are BRANZ Appraised. Refer to BRANZ Appraisal 1211(2022).

2.2 Responsibility

The specifier or other party responsible for the project must run through a risk matrix analysis to determine which construction method is to be used. The designer must also ensure that the figures published in this specification are appropriate for the intended application and that additional detailing is performed for specific design or any areas that fall outside the scope of this specification. The designers should ensure that the intent of their design meets the requirements of NZBC.

All New Zealand Standards referenced in this manual are current edition and must be complied with.

James Hardie conducts stringent quality checks to ensure that any product manufactured falls within our quality spectrum. It is the responsibility of the builder to ensure that the product meets aesthetic requirements before installation. James Hardie will not be responsible for rectifying obvious aesthetic surface variations following installation.

2.3 Site and Foundation

The site on which the building is situated must comply with the NZBC Acceptable Solution E1/AS1 'Surface Water'.

Foundations design must comply with the requirements of NZS 3604 'Timber-framed buildings' or be as per specific engineering design.

The grade of adjacent finished ground must slope away from the building to avoid any possibility of water accumulation in accordance with the NZBC requirements.

KDC - Approved Building Consent Document - 210608 - Minor Variation for cladding change to Axon Board on Cavity - Pg 19 of 58 - 4/04/2022 - aaron.brown

2.4 Surface Clearances

The clearance between the bottom edge of the cladding and paved/unpaved ground must comply with section 9.1.3 of E2/AS1. The finished floor level must also comply with these requirements. These clearances must be maintained throughout the life of the building .

Axon Panel/EasyLap Panel must overhang the bottom plate on a concrete slab by a minimum of 50mm, as required by NZS 3604.

Axon Panel/EasyLap Panel must have a minimum clearance of 100mm paved ground, and 175mm from unpaved ground.

On roofs and decks, the minimum clearance must be 50mm.

Do not install external cladding such that it may remain in contact with water or ground.

2.5 Moisture Management

It is the responsibility of the specifier to identify moisture related risks associated with any particular building design.

Wall construction design must effectively manage moisture, considering both the interior and exterior environments of the building, particularly in buildings that have a higher risk of wind driven rain penetration or that are artificially heated or cooled.

Walls must include those provisions as required by the NZBC Acceptable Solution E2/AS1 'External Moisture'. In addition all wall openings, penetrations, junctions, connections, window sills, heads and jambs must incorporate appropriate flashings for waterproofing. The other materials, components and installation methods used to manage moisture in external walls, must comply with the requirements of relevant standards, manufactures specifications and the NZBC.

2.6 Structure

2.6.1 Timber Framing

Timber framed buildings must be designed in accordance with the NZS 3604 (Timber-framed buildings). When the framing is provided as per the specific engineering design, the framing stiffness must be equivalent to, or more than, the stiffness requirements of the NZS 3604.

For timber frame walls longer than 12m, it is best practice to allow for construction joints to accommodate movements generated due to timber shrinkage or deflections etc.

2.6.2 Wind Loading

Axon Panel/EasyLap Panel is suitable for use in all wind zones in New Zealand up to and including EH as defined in the NZS 3604.

A specific design is required for all situations where the buildings fall in a specific engineering design (SED) wind zone.

2.7 Bracing

Axon Panel installed to timber cavity batten cannot be used to achieve structural bracing. However bracing can be achieved by useing HomeRAB™ Pre-Cladding or RAB™ Board installed direct to framing instead of a flexible underlay or by using Villaboard Lining bracing system on the internal face. Refer to the Bracing Design Manual by James Hardie for further information.

2.8 Fire Rated Walls

Axon Panel/EasyLap Panel when fixed to timber cavity battens to external walls can achieve fire ratings up to 60/60/60 to comply with C/AS1 of the NZBC, when the walls are constructed in accordance with the current Fire and Acoustic Design Manual by James Hardie.

Axon Panel/EasyLap Panel are suitable for use where 'non-combustible' materials are required on walls close to a boundary.

KDC - Approved Building Consent Document - 210608 - Minor Variation for cladding change to Axon Board on Cavity - Pg 20 of 58 - 4/04/2022 - aaron.brown

2.9 Energy Efficiency

External walls constructed as per this technical specification, using Axon Panel/EasyLap Panel cladding must use suitable bulk insulation to meet the minimum thermal insulation requirements as per Clause H1/AS1 'Energy Efficiency' of the NZBC.

3 Framing

3.1 General

Axon Panels/EasyLap Panels can be installed to timber-framed or steel-framed structures. Fixing to any other framing material is subject to a specific engineering design.

- Stud spacing must not exceed 600mm centres.
- Nog/dwang spacing must not exceed 800mm centres when studs are at 600mm centres.

3.2 Timber Framing

3.2.1 Dimensions

A minimum 70mm wide stud is required at panel edges for cavity construction using Hardie™ Flex nails.

3.2.2 Structural Grade

Timber framing structural grade to be in accordance with NZS 3604.

3.2.3 Durability

The external framing must be treated to a minimum H1.2 treatment. Refer to NZBC Acceptable Solution B2/AS1 'Durability' for further information about the durability requirements.

For timber treatment and allowable moisture content information refer to NZS 3602 (Timber and Wood-Based Products for use in Buildings) and NZS 3640 (Chemical Preservation of Round Sawn Timber) for minimum timber treatment selection and treatment requirements.

Also refer to framing manufacturer's literature for further guidance on timber selection. Framing must be protected from moisture at site in accordance with the recommendation of framing manufacturer's.

Note: Refer to NZS 3602 for the allowable moisture contents in timber.

3.2.4 Frame Construction

The framing must fully support all panel edges. The framing must be rigid and not rely on the cladding panel for stability.

All timber framing sizes and set-out must comply with the NZS 3604 and as specified in this specification.

In case of gable end trusses sitting on top plates of the external wall frame, the frame size must be in accordance with truss design and specification supplied by the frame and truss manufacturer/supplier supported by independent design producer statement.

KDC - Approved Building Consent Document - 210608 - Minor Variation for cladding change to Axon Board on Cavity - Pg 21 of 58 - 4/04/2022 - aaron.brown

3.3 Steel Framing

3.3.1 Dimensions and Gauge

A 38mm minimum stud width is required. Framing members must be 0.55mm minimum to 1.6mm maximum BMT (Base Metal Thickness).

3.3.2 Durability

The steel framing must have the appropriate level of coating to prevent corrosion and to comply with the durability requirements of NZBC.

3.3.3 Frame Construction

Steel framing must comply with NASH handbook/guidelines. Stud and batten spacing must not be more than what has been specified in this specification. Refer to framing manufacturer's specifications or NASH for further guidance on steel frame installation.

3.4 Cavity Construction Method

For cavity construction method the following framing is required:

- When studs are spaced at 600mm centres maximum, the nogs/dwangs must be provided at 800mm centres maximum.
- A minimum 70mm wide stud is required at vertical panel joint.
- When studs are spaced at 400mm centres then the nogs/dwangs may be provided at 1200mm centres.

3.5 Special Framing Requirements

The following are special framing requirements for both timber and steel framing:

- Double studs are required at internal corners, refer to Figure 8.
- Double studs are required at each shiplap vertical joint. Refer to Figures 6 and 7.

3.6 Tolerances

In order to achieve an acceptable wall finish, it is imperative that framing is straight and true.

Framing tolerances must comply with the requirements of the NZS 3604. All framing shall be made flush.

KDC - Approved Building Consent Document - 210608 - Minor Variation for cladding change to Axon Board on Cavity - Pg 22 of 58 - 4/04/2022 - aaron.brown

4 Preparation

4.1 Flexible Underlay or HomeRAB™ Pre-Cladding

Flexible underlay must be provided as per the requirements of the NZBC Acceptable Solution E2/AS1 'External Moisture' Table 23. The flexible underlay must be fixed in accordance with E2/AS1 and the underlay manufacturer's recommendations. Walls which are not lined on the inside face (e.g. garage walls or gable ends) must include a rigid sheathing or an air barrier behind the cladding which complies with the requirements of the NZBC Acceptable Solution E2/AS1 Table 23. HomeRAB™ Pre-Cladding is suitable for use in these applications. It must be installed in accordance with HomeRAB™ Pre-Cladding and RAB™ Board installation manual.

4.2 RAB™ Board or Rigid Air Barrier

For specific design projects where the wind pressure is higher than 1.5kPa, or when an EH windzone, RAB™ Board must be used instead of flexible underlay. RAB™ Board is suitable to withstand wind pressures up to 4.5kPa.

To achieve the temporary weathertightness using HomeRAB™ Pre-Cladding or RAB™ Board, windows/doors can be temporarily installed. Refer to HomeRAB™ Pre-Cladding and RAB™ Board installation manual for information regarding its installation.

4.3 Vent Strip

The Hardie™ uPVC cavity vent strip must be installed at the bottom of all walls constructed using the drained and ventilated cavity construction method. It is important that the openings in the vent strip are kept clear and unobstructed to allow free drainage and ventilation of cavities. Hardie™ uPVC vent strip has an opening area of 1000mm^2/m length.

4.4 Cavity Battens

Buildings with a risk score of 7-20 calculated in accordance with Table 3 of Acceptable Solution E2/AS1 of the NZBC, require Axon Panel/EasyLap Panel to be installed on a cavity. The battens provide airspace between the frame and the panel and are considered a "packer" only in this specification.

The timber cavity battens must be minimum H3.1 treated in accordance with NZS 3640 (Chemical preservation of rough and sawn timber) to comply with the durability requirements of B2/AS1.

Cavity battens must comply with E2/AS1 and:

- Be minimum 18mm thick
- Be as wide as the width of studs
- Be provided at 300mm centres where studs are fixed at 600mm centres.
- Be fixed by the cladding fixings to the main framing over the flexible underlay. Therefore until claddings are fixed the battens only need to be fixed to framing by 40 x 2.8mm nails at 800mm centres.

4.5 Intermediate Support

Where studs are at 600mm centres an intermediate means of restraining the building underlay and insulation from bulging into the cavity shall be installed. An acceptable method to achieve this is using one of the following options:

- Intermediate cavity batten between the studs; or
- 75mm galvanized mesh; or
- Polypropylene tape at 300mm centres fixed horizontally and drawn taut

KDC - Approved Building Consent Document - 210608 - Minor Variation for cladding change to Axon Board on Cavity - Pg 23 of 58 - 4/04/2022 - aaron.brown

No intermediate supports/battens are required:

- When studs are spaced at 400mm centres; or
- When rigid air barriers instead of building underlays are used.

4.6 Flashings

All wall openings, penetrations, intersections, connections, window sills, heads and jambs must be flashed prior to panel installation. Please refer to moisture management requirements in Clause 2.5.

The flexible underlays must be appropriately incorporated with penetration and junction flashings. Materials must be lapped in such a way that water tracks down to the exterior on the face of flexible underlay.

The selected flashing materials must comply with the durability requirements of the NZBC. For information refer to Table 20 of E2/AS1.

5 Panel Fixing

5.1 General

Axon Panel/EasyLap Panel must be kept dry and under cover whilst in storage or prior to/during the installation. Every endeavour must be made to keep framing dry once panel fixing commences. All site cut panel edges must be sealed prior to installation.

The shiplap jointing of panels is only suitable for vertical fixing of panels. Do not fix in the groove of Axon Panel. Minimum sheet width around window/door openings or corners etc. to be 200mm.

This specifications covers the fixing of Axon Panel/EasyLap Panel to timber cavity battens fixed over timber frame. When fixing to a steel frame, Ask James Hardie 0800 808 868.

5.2 Fastener Durability

Fasteners must meet the minimum durability requirements of the NZBC. Refer to Table 2 for fixing materials requirements to be used in relation to the exposure conditions.

Table 2

Exposure conditions and nail selection prescribed by NZS 3604		
Zone	**Application**	
D (sea spray) and geothermal hot spots	General	Stainless steel 304/316
	Fire	
*C and B	General	Hot dip galvanised**
	Fire	

* Zone C areas where local knowledge dictates that increased durability is required, appropriate selection shall be made Microclimatic conditions as detailed in NZS 3604, Paragraph 4.2.4 require SED.
**Hot dip galvanised must comply with AS/NZS 4680.
Also refer to the NZBC Acceptable Solution E2/AS1 Table 20 and 21 for information regarding the selection of suitable fixing materials and their compatibility with other materials.

KDC - Approved Building Consent Document - 210608 - Minor Variation for cladding change to Axon Board on Cavity - Pg 24 of 58 - 4/04/2022 - aaron.brown

5.3 Fastener – Size and Layout

Axon Panel/EasyLap Panel must be fixed to framing using the fixings as specified in Table 3 below and follow the edge distance required for nails as shown in the details. Fixings must be finished flush with the panel surface. Refer to Figures 6 and 7.

Table 3

Panel fixing	
Cavity construction over flexible underlay	
60 x 3.15mm Hardie™ Flex nails.	Fix at 200mm centres to all vertical framing. Stud width 70mm min required at vertical joint.
Cavity construction over HomeRAB™ Pre-Cladding or RAB™ Board	
75 x 3.15mm Hardie™ Flex nails.	Fix at 200mm centres to all vertical framing. Stud width 70mm min required at vertical joint.

For other fixing options Ask James Hardie on 0800 808 868.

Note: Special fixing arrangements are required for bracing and fire-resistance rated wall systems. For more information Ask James Hardie on 0800 808 868.

- When fixing the panels using nail guns, refer to the nail gun manufacturer for information about nails and the type of nail gun to be used.

Note: Do not use 'D' head nails.

5.4 Panel Layout

All panel edges must be supported by the framing. The shiplap joint must be formed vertically. The framing centres must be checked before the panel installation. Refer to Figure 3.

6 Jointing

6.1 General

Axon Panels/EasyLap Panels are fixed to form a shiplap joint at vertical edges. The panels have factory made edges to suit this jointing.

6.2 Vertical Joint

Axon Panels/EasyLap Panels are shiplap jointed keeping a gap of 1-2mm between the panels. A 50mm wide 3259 Inseal sealing tape is used under the joint. A flexible sealant must be applied to the full length of the joint before the panels are jointed. The edge distance for a Hardie™ Flex nail must be 18mm min. Refer to Figures 6 and 7.

KDC - Approved Building Consent Document - 210608 - Minor Variation for cladding change to Axon Board on Cavity - Pg 25 of 58 - 4/04/2022 - aaron.brown

6.3 Horizontal Joint

At floor joist levels a horizontal joint must be provided to accommodate the movement resulting from timber joist shrinkage and settlement. A Hardie™ aluminium horizontal 'h' mould is used to form a horizontal joint. Use the aluminium 'h' mould jointer to cover over the butt joint of flashings. A purpose made metal 'Z' flashing could also be used to flash the horizontal joint. Refer to Figure 16.

6.4 External Corner

An aluminium box corner flashing is used to form the external box corner. The site cut sheet edges are sealed before butting them into the box corner.

On a two storey construction the aluminium box corner is finished under the aluminium 'h' mould. A Hardie™ 9mm aluminium 'h' mould external corner must be used over the corner when in this situation. Refer to Figures 9 and 18.

6.5 Internal Corner

The internal corner is formed using the uPVC corner under flashing or an 80mm wide Inseal sealing strip behind the panel edges. The joint is filled with the flexible sealant. Refer to Figure 8.

6.6 Flashing Material Durability

Please refer to Table 20 of E2/AS1 of the NZBC regarding the durability requirements of various flashing materials.

7 Finishing

7.1 Preparation

Painting of Axon Panel/EasyLap Panel is required to meet the durability requirements of the NZBC and James Hardie product warranties.

Axon Panel/EasyLap Panel must be dry and free from dirt before painting.

For best aesthetic results a low sheen paint is recommended. Dark paints can be used when using the aluminium flashings.

7.2 Sealants

All sealants used must comply with the relevant requirements of the NZBC. The application and usage must be in accordance with manufacturer's instructions. Check with sealant manufacturer prior to coating over sealants. Some sealant manufacturers do not recommend coating over their product.

KDC - Approved Building Consent Document - 210608 - Minor Variation for cladding change to Axon Board on Cavity - Pg 26 of 58 - 4/04/2022 - aaron.brown

7.3 Coating

Axon Panels/EasyLap Panels are supplied pre-primed. Panels must be painted within 90 days of installation. Use only quality exterior paints complying with AS 3730. Manufacturer's specification for the selected paint must be followed. Note that certain special paints require an undercoat before applying the finish coat. Refer to the paint manufacturer for preparation required before commencing the coating work. Axon Panel/EasyLap Panels can be painted with dark colour paints. When using uPVC flashings, the LRV of colour should be 40% or higher.

7.4 Staining

Stains containing linseed oil are specifically designed for wood and may not be suitable for fibre cement cladding products, primed or unprimed. Semi-transparent stains can vary in uniformity of appearance depending on method of application and conditions, requiring a high level of skill and craftsmanship to achieve a uniform appearance. Clear coats have not proven durable in exterior exposure and James Hardie considers them a maintenance item that may require application of a refurbishing sealer at regular intervals. James Hardie does not warrant the appearance and durability of the use of semi-transparent stains and clear coats.

For further information contact the stain manufacturers. Refer to Section 11 for stain manufacturer details.

8 Care and Maintenance

The extent and nature of maintenance will depend on the geographical location and exposure of the building. As a guide, it is recommended that basic normal maintenance tasks shall include but not be limited to:

- Washing down exterior surfaces every 6-12 months using low pressure water and a brush, and every 3-4 months in extreme coastal conditions or sea spray zones. Refer to your paint manufacturer for wash down requirements and do not use a water blaster to wash down the cladding.
- Re-applying of exterior protective finishes if necessary. Always refer to your paint manufacturer for re-coating requirements.
- Maintaining the exterior envelope and connections including joints, penetrations, flashings and sealants that may provide a means of moisture entry beyond the exterior cladding.
- Cleaning out gutters, blocked pipes and overflows as required
- Pruning back vegetation that is close to or touching the building
- The clearance between the bottom edge of Axon Panel/EasyLap Panel and the finished ground must always be maintained.

KDC - Approved Building Consent Document - 210608 - Minor Variation for cladding change to Axon Board on Cavity - Pg 27 of 58 - 4/04/2022 - aaron.brown

9 Product information

9.1 Manufacturing and Classification

Axon Panel/EasyLap Panel is a cellulose fibre reinforced cement building product. The basic composition is portland cement, ground sand, cellulose fibre and water. The panels are easily identified by the name 'Axon Panel' 'EasyLap Panel' respectively printed at regular intervals on the back face of panel.

Axon Panel/EasyLap Panel is manufactured to AS/NZS 2908.2 'Cellulose-Cement Products Part 2: Flat Sheets' (ISO 8336 'Fibre Cement Flat Panels') standards in New Zealand. James Hardie is an ISO 9001 certified manufacturer.

Axon Panel/EasyLap Panel is classified Type A, Category 2 in accordance with AS/NZS 2908.2 "Cellulose-Cement Products".

For Safety Data Sheets (SDS) visit www.jameshardie.co.nz or Ask James Hardie on 0800 808 868.

9.2 Product Mass

Axon Panel/EasyLap Panel is manufactured in 9.0 mm thickness and has a mass of 12.1kg/m^2 at EMC.

Axon Panel/EasyLap Panel cladding is defined as a Light Weight Wall Cladding (not exceeding 30kg/m^2) as per NZS 3604.

9.3 Durability

Axon Panel/EasyLap Panel installed as per this technical specification will meet the durability requirements for claddings as required under clause 'B2-Durability' of the NZBC.

9.3.1 Resistance to Moisture/Rotting

Axon Panel/EasyLap Panel has demonstrated resistance to permanent moisture induced deterioration (rotting) and has passed the following tests in accordance with AS/NZS 2908.2:

- Heat Rain (Clause 6.5).
- Water Permeability (Clause 8.2.2).
- Warm Water (Clause 8.2.4).
- Soak Dry (Clause 8.2.5).

9.3.2 Control of External Fire Spread

Axon Panel/EasyLap Panel is suitable for use in external wall cladding applications where 'Non-Combustible Materials' are specified and complies with the requirements of Section 5.4 of C/AS1 and 5.8.1 (b) of C/AS2 of the NZBC.

Refer to Fire and Acoustic Design Manual by James Hardie for construction details.

9.3.3 Alpine Regions

In regions subject to freeze/thaw conditions, Axon Panel/EasyLap Panel must not be in direct contact with snow or ice build up for extended periods, e.g. external walls in alpine regions must be protected where snow drifts over winter are expected.

The Axon Panel/EasyLap Panel has been tested in accordance with AS/NZS 2908.2 Clause 8.2.3.

KDC - Approved Building Consent Document - 210608 - Minor Variation for cladding change to Axon Board on Cavity - Pg 28 of 58 - 4/04/2022 - aaron.brown

10 Safe Working Practices

WARNING - DO NOT BREATHE DUST AND CUT ONLY IN WELL VENTILATED AREA

Hardie™ fibre cement products products contain sand, a source of respirable crystalline silica

May cause cancer if dust from product is inhaled. Causes damage to lungs and respiratory system through prolonged or repeated inhalation of dust from product.

Intact fibre cement products are not expected to result in any adverse toxic effects. The hazard associated with fibre cement arises from the respirable crystalline silica present in dust generated by activities such as cutting, rebating, drilling, routing, sawing, crushing, or otherwise abrading fibre cement, and when cleaning up, disposing of or moving dust.

When doing any of these activities in a manner that generates dust, follow James Hardie instructions and best practices to reduce or limit the release of dust.

If using a dust mask or respirator, use an AS/NZS 1716 P1 filter and refer to Australian/New Zealand Standard 1715:2009 Selection, Use and Maintenance of Respiratory Protective Equipment for more extensive guidance and more options for selecting respirators for workplaces. For further information, refer to our installation instructions and Safety Data Sheets available at www.jameshardie.co.nz.

FAILURE TO ADHERE TO OUR WARNINGS, SAFETY DATA SHEETS, AND INSTALLATION INSTRUCTIONS MAY LEAD TO SERIOUS PERSONAL INJURY OR DEATH.

Crystalline Silica is

- Commonly known as sand or quartz
- Found in many building products e.g. concrete, bricks, grout, wallboard, ceramic tiles, and all fibre cement materials

Why is Crystalline Silica a health hazard?

- Silica can be breathed deep into the lungs when present in the air as a very fine (respirable) dust
- Exposure to silica dust without taking the appropriate safety measures to minimise the amount being breathed in, can lead to a potentially fatal lung disease – silicosis – and has also been linked with other diseases including cancer. Some studies suggest that smoking may increase these risks
- The most hazardous dust is the dust you cannot see!

When is Crystalline Silica a health hazard?

- It's dangerous to health if safety protocols to control dust are not followed when cutting, drilling or rebating a product containing crystalline silica and when cleaning up
- Products containing silica are harmless if intact (e.g. an un-cut sheet of wall board)

KDC - Approved Building Consent Document - 210608 - Minor Variation for cladding change to Axon Board on Cavity - Pg 29 of 58 - 4/04/2022 - aaron.brown

Avoid breathing in crystalline silica dust

Safe working practices

- ✕ NEVER use a power saw indoors or in a poorly ventilated area
- ✕ NEVER dry sweep
- ✓ ALWAYS use M Class or higher vacuum or damp down dust before sweeping up
- ✕ NEVER use grinders
- ✓ ALWAYS use a dust reducing circular saw equipped with a sawblade specifically designed to minimise dust creation when cutting fibre cement – preferably a sawblade that carries the Hardie™ Blade name or one with at least equivalent performance – connected to an M Class or higher vacuum
- ✓ Before cutting warn others in the area to avoid dust
- ✓ ALWAYS follow tool manufacturers' safety recommendations
- ✓ ALWAYS expose only the minimum required depth of blade for the thickness of fibre cement to be cut
- ✓ ALWAYS wear a properly-fitted, approved dust mask or respirator P1 or higher in accordance with applicable government regulations and manufacturer instructions
- ✓ Consider rotating personnel across cutting tasks to further limit respirable silica exposures.

When cutting Axon or EasyLap Panels:

- ✓ Work outdoors only
- ✓ Make sure you work in a well ventilated area
- ✓ Position cutting station so wind will blow dust away from yourself and others in the working area
- ✓ Rotate employees across cutting task over duration of shift
- ✓ Cut products with a Hardie™ Blade Saw Blade (or equivalent) and a dust reducing circular saw connected to a M Class or higher vacuum
- ✓ When sawing, sanding, rebating, drilling or machining fibre cement products, always:
  - Wear your P1 or higher (correctly fitted in accordance with manufacturers' instructions), ask others to do the same.
  - Keep persons on site at least 2 metres and as far as practicable away from the cutting station while the saw is in operation
  - If you are not clean shaven, then use a powered air respirator with a loose fitting head top
  - Wear safety glasses
  - Wear hearing protection
- ✓ Make sure you clean up BUT never dry sweep. Always hose down with water/wet wipe or use an M Class or higher vacuum

Working Instructions

Hardie™ Blade Saw Blade

The Hardie™ Blade Saw Blade used with a dust-reducing saw is ideal for fast, clean cutting of Hardie™ fibre cement products. A dust-reducing saw uses a dust collector connected to a M Class or higher vacuum. When sawing, clamp a straight edge to the sheet as a guide and run the saw base plate along the straight edge when making the cut.

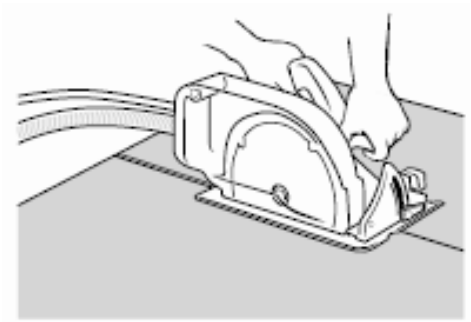

KDC - Approved Building Consent Document - 210608 - Minor Variation for cladding change to Axon Board on Cavity - Pg 30 of 58 - 4/04/2022 - aaron.brown

Hole-Forming

For smooth clean cut circular holes:

- Mark the centre of the hole on the sheet
- Pre-drill a 'pilot' hole
- Using the pilot hole as a guide, cut the hole to the appropriate diameter with a hole saw fitted to a heavy duty electric drill

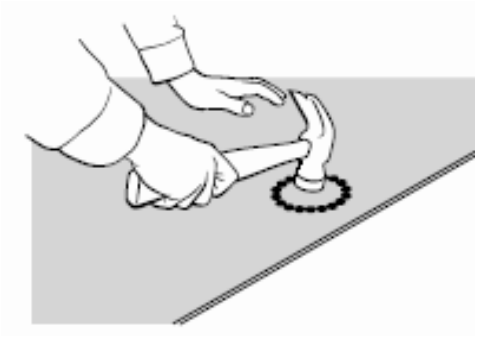

For irregular holes:

- Small rectangular or circular holes can be cut by drilling a series of small holes around the perimeter of the hole then tapping out the waste piece from the sheet face
- Tap carefully to avoid damage to sheets, ensuring that the sheet edges are properly supported

10.1 Storage and delivery

Keeping products and people safe

Off loading

✓ Hardie™ fibre cement products should be off-loaded carefully by hand or by forklift

✓ Hardie™ fibre cement products should not be rolled or dumped off a truck during the delivery to the jobsite

Storage

Hardie™ fibre cement products should be stored:

✓ In their original packaging

✓ Under cover where possible or otherwise protected with a waterproof covering to keep products dry

✓ Off the ground – either on a pallet or adequately supported on timber or other spacers

✓ Flat so as to minimise bending

Hardie™ fibre cement products must not be stored:

✗ Directly on the ground

✗ In the open air exposed to the elements

James Hardie is not responsible for damage due to improper storage and handling.

10.2 Tips for safe and easy handling of Axon and EasyLap Panels

✗ Do not lift planked products flat and in the middle

✓ Carry the products on the edge

✓ If only one person is carrying the product, hold it in the middle and spread arms apart to better support the product

✓ If two people are carrying the plank, hold it near each end and on edge

✓ Exercise care when handling weatherboard products to avoid damaging the edges/corners

KDC - Approved Building Consent Document - 210608 - Minor Variation for cladding change to Axon Board on Cavity - Pg 31 of 58 - 4/04/2022 - aaron.brown

11 Accessories

Table 4

Axon Panel information					
Product	**Description**	**Thickness (mm)**	**Size**		**Product Code**
			Length (mm)	**Width (mm)**	
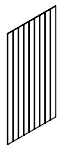	**Axon Panel 133 Smooth** Is a shiplap jointed panel to hide the panel joints. The panel is face primed. The panel has grooves at 133mm centres. The panel must be installed vertically. Nom. Panel Mass: 12.1kg/m^2	9	2450	1200	**403780**
			2750	1200	**403781**
			3000	1200	**403782**
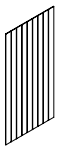	**Axon Panel 133 Grained** Is a shiplap jointed panel to hide the panel joints. The panel is face primed. The panel has grooves at 133mm centres. The panel must be installed vertically. Nom. Panel Mass: 12.1kg/m^2	9	3000	1200	**404512**
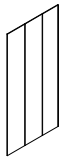	**Axon Panel 400 Smooth** Is a shiplap jointed panel to hide the panel joints. The panel is face primed. The panel has grooves at 400mm centres. The panel must be installed vertically. Nom. Panel Mass: 12.1kg/m2	9	2450	1200	**404414**
			2750	1200	**404415**
			3000	1200	**404416**

Note: The actual width of the panel is 1203mm. All dimensions and masses provided are approximate only and are subject to manufacturing tolerances.

EasyLap Panel information					
Product	**Description**	**Thickness (mm)**	**Size**		**Product Code**
			Length (mm)	**Width (mm)**	
	EasyLap Panel A shiplap edge panel for subtle vertical joints To be finished with site applied acrylic texture finishes.	9	2450	1200	**404764**
			2750	1200	**404763**

Note: All dimensions and masses provided are approximate only and subject to manufacturing tolerances.

KDC - Approved Building Consent Document - 210608 - Minor Variation for cladding change to Axon Board on Cavity - Pg 32 of 58 - 4/04/2022 - aaron.brown

Accessories/tools supplied by James Hardie			
Accessories	**Description and Material Code**	**Quantity/Size (approx)**	**Product Code**
	**Hardie™ 9mm Panel Aluminium External Box Corner** A box corner mould to form the external joints. 9mm etch prime.	2450mm long 2750mm long 3000mm long 4000mm long	**304509** **304510** **305150** **305808**
	**Hardie™ 9mm Panel Aluminium Horizontal 'h' Mould** A horizontal flashing to flash the horizontal joints. 9mm etch prime.	3000mm long	**304508**
	**Aluminium 'h' Mould Jointer** A jointer to cover the butt joint of 'h' mould.	100mm long	**304512**
	**uPVC Corner Under Flashing** A 50 x 50mm corner under flashing for internal and external joints	3000mm long	**303745**
	**uPVC Vent Strip** Used to provide protection from vermin entering cavity space.	3000mm long	**302490**
	**INSEAL® 3259 Tape** Black 48mm tape to be used under the vertical shiplap joint. Black 80mm tape to be used at corners.	50m roll 80m roll	**300767** **300769**
Tools			
	**Hardie™ Blade Saw Blade** Diamond tip 184mm diameter fibre cement circular saw blade. Spacers not included.	Each	**300660**
	**Hardie™ Flex Stainless Steel 316 Nails** For fixing panels through cavity battens. 60 x 3.15mm	5kg	**302782**
	**Hardie™ Flex Hot Dip Galv. Nails** For fixing panels through cavity battens. 60 x 3.15mm	5kg	**302784**
	**Hardie™ Flex Stainless Steel 316 Nails** For fixing panels through cavity battens. 75 x 3.15mm	5kg	**304253**
	**Hardie™ Flex Hot Dip Galv. Nails** For fixing panels through cavity battens. 75 x 3.15mm	5kg	**304251**

KDC - Approved Building Consent Document - 210608 - Minor Variation for cladding change to Axon Board on Cavity - Pg 33 of 58 - 4/04/2022 - aaron.brown

Accessories/tools not supplied by James Hardie

James Hardie recommends the following products for use in conjunction with Axon Panel/EasyLap Panel. James Hardie does not supply these products and does not provide a warranty for their use. Please contact component manufacturer for information on their warranties and further information on their products.

Accessories	Description
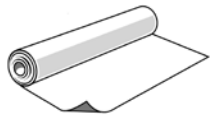	**Flexible underlay** To comply with Table 23 of E2/AS1.
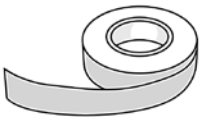	**Flexible tape** A flexible self-adhesive tape used in preparation of a window. Refer to the Window installation section in this manual for more information. e.g. Tyvek®, Protecto® or Thermakraft™ or similar.
	**Joint sealant** Paintable flexible sealants are recommended for filling the joints. Refer to Section 7.2 for information.
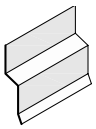	**Head flashing** Required over window heads to be supplied by window installer. Material must comply with Table 20 and 21 of E2/AS1.
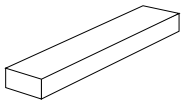	**Timber cavity batten** H3.1 minimum treated
	**Stain** Timbakote® Tel: 0800 846 225

KDC - Approved Building Consent Document - 210608 - Minor Variation for cladding change to Axon Board on Cavity - Pg 34 of 58 - 4/04/2022 - aaron.brown

12 Details

The following generic details have been provided in this document for cavity construction methods.

Table 5

Panel fixing		
Description	**Cavity Construction**	
	Figure No.	**Page No.**
Typical Framing Setout	Figure 1	22
Batten Fixing	Figure 2	23
Typical Panel Fixing Setout	Figure 3	24
Foundation Detail	Figure 4	25
Enclosed Deck	Figure 5	25
Axon Panel cavity shiplap joint	Figure 6	26
EasyLap Panel shiplap joint	Figure 7	26
Internal Corner Detail	Figure 8	27
External Corner Detail	Figure 9	27
Soffit Detail	Figure 10	28
Window head	Figure 11	29
Window Sill	Figure 12	30
Window jamb	Figure 13	31
Window jamb with scriber	Figure 14	31
Alternative Head Flashing Termination Against Batten	Figure 15	32
Horizontal joint detail	Figure 16	33
Aluminium 'h' Mould Jointer	Figure 17	33
Corner at 'h' Mould Joint Detail	Figure 18	34
Pipe Penetration	Figure 19	35
Cavity Interstorey Drainage	Figure 20	36
One piece apron flashing joint	Figure 21	37
Enclosed deck balustrade to wall junction	Figure 22	38
Balustrade to wall	Figure 23	39
Parapet	Figure 24	40
Roof to Wall Junction Detail	Figure 25	41

KDC - Approved Building Consent Document - 210608 - Minor Variation for cladding change to Axon Board on Cavity - Pg 35 of 58 - 4/04/2022 - aaron.brown

Figure 1: Cavity fixed typical framing setout

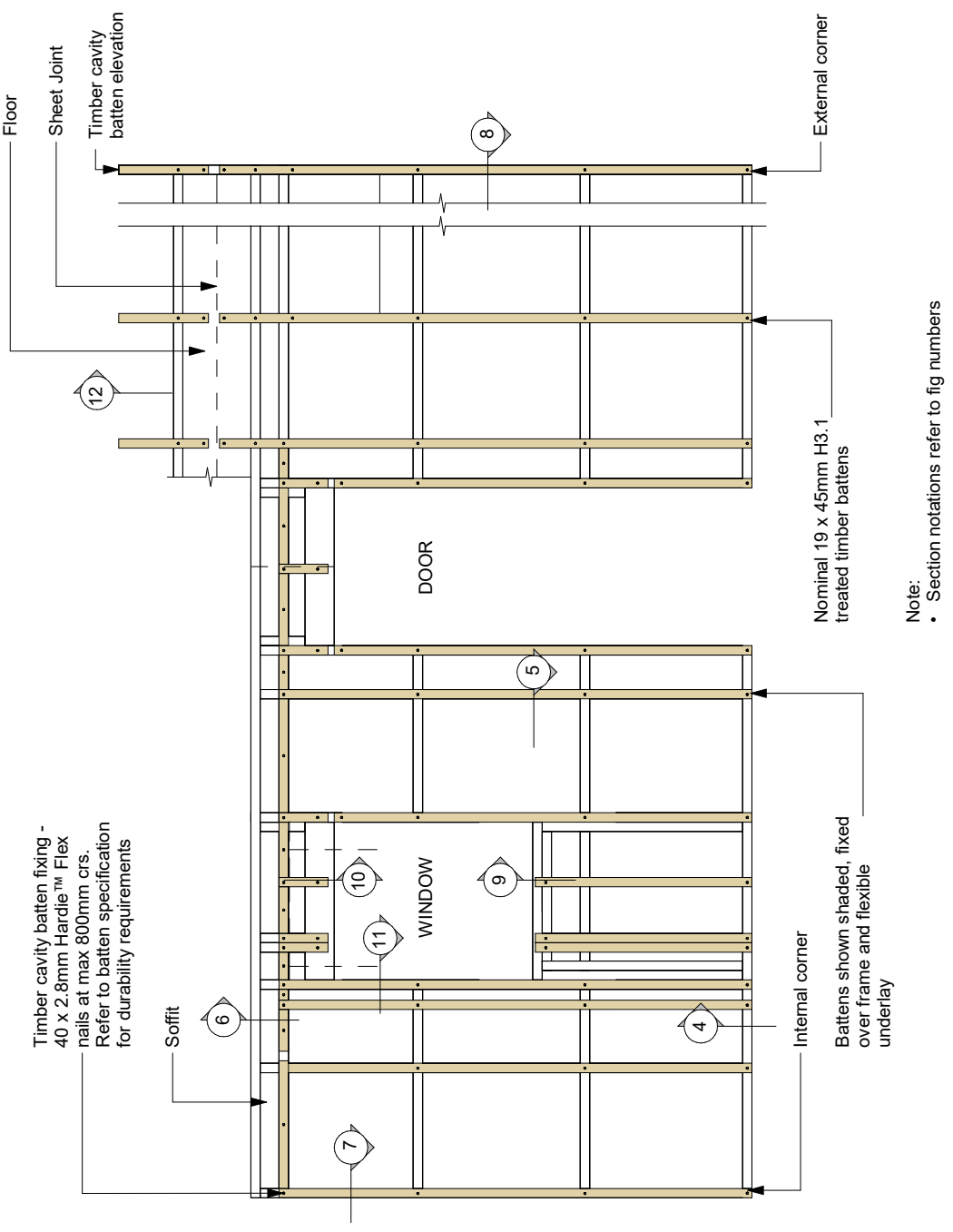

KDC - Approved Building Consent Document - 210608 - Minor Variation for cladding change to Axon Board on Cavity - Pg 36 of 58 - 4/04/2022 - aaron.brown

Figure 2: Cavity batten fixing

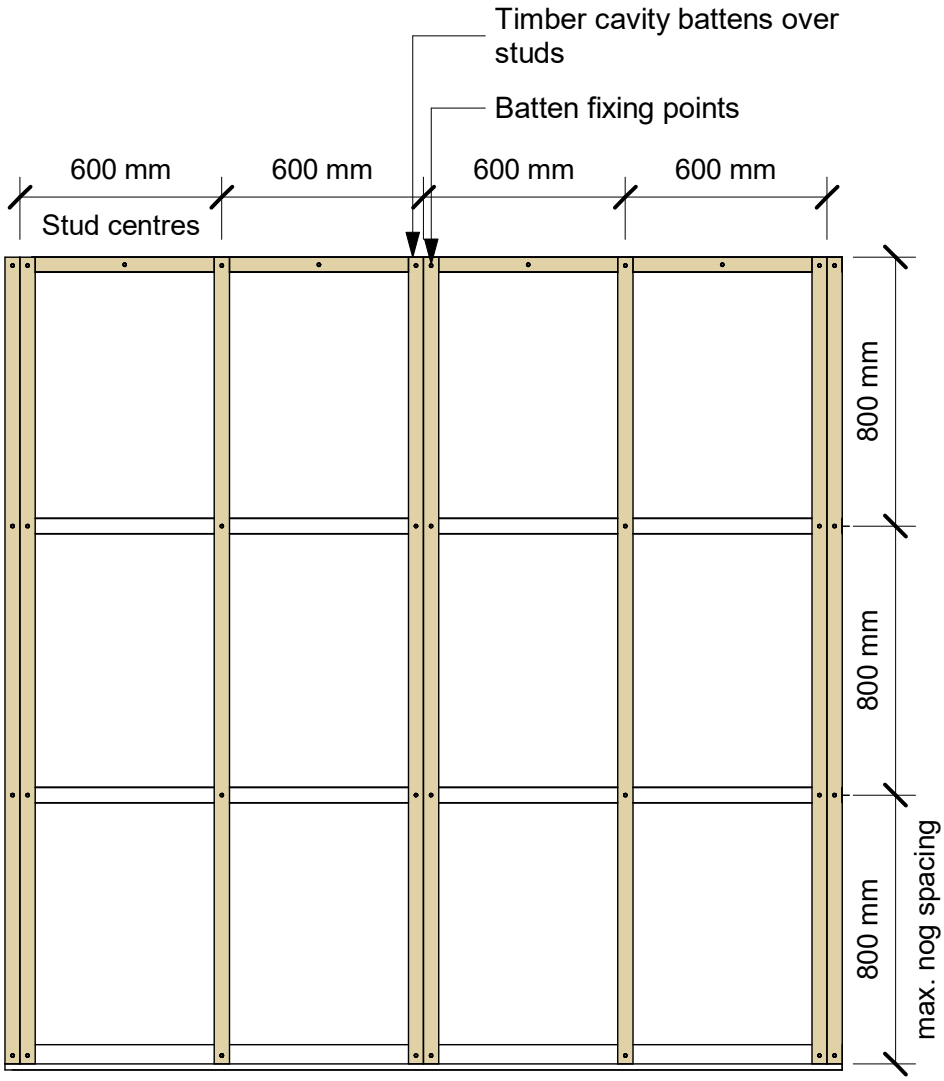

Note:

- Check Figure 5 for framing and batten requirements for vertical joint

KDC - Approved Building Consent Document - 210608 - Minor Variation for cladding change to Axon Board on Cavity - Pg 37 of 58 - 4/04/2022 - aaron.brown

Figure 3: Cavity fixed typical panel fixing setout

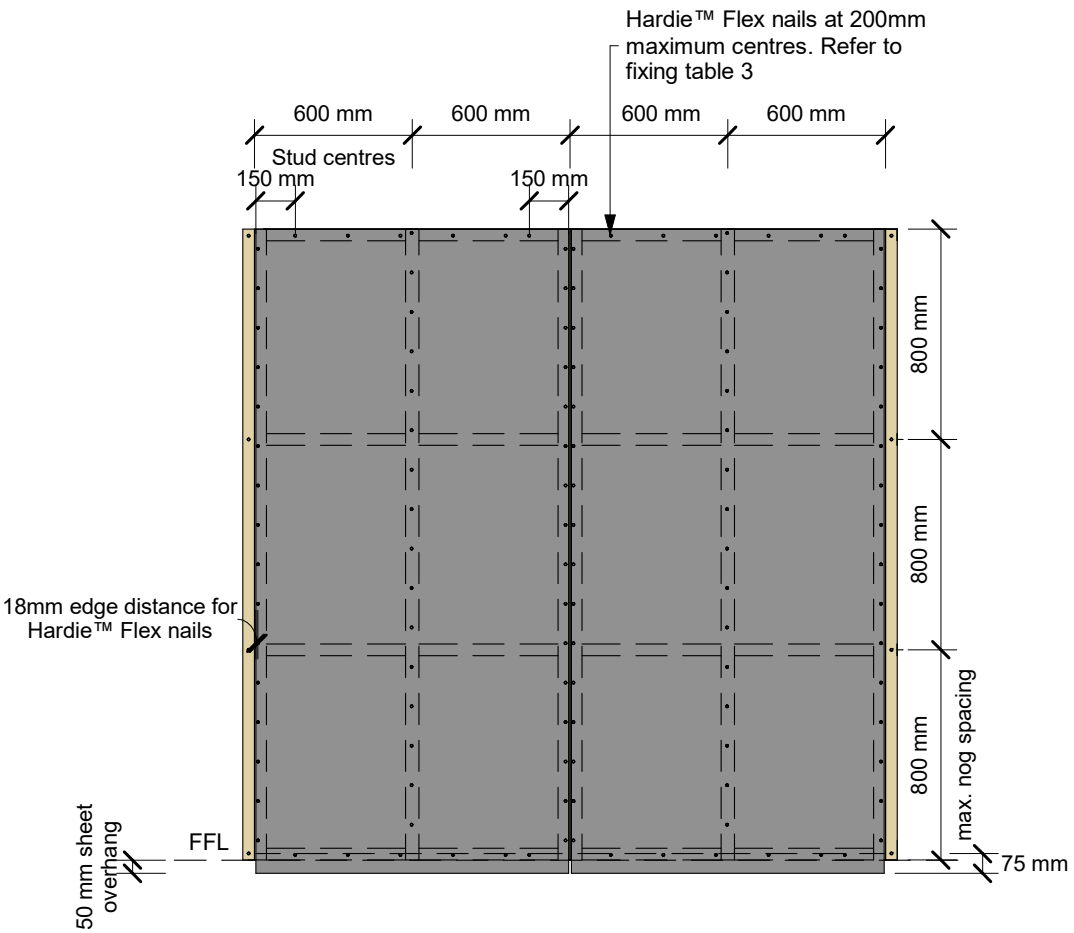

KDC - Approved Building Consent Document - 210608 - Minor Variation for cladding change to Axon Board on Cavity - Pg 38 of 58 - 4/04/2022 - aaron.brown

Figure 4: Cavity fixed foundation detail

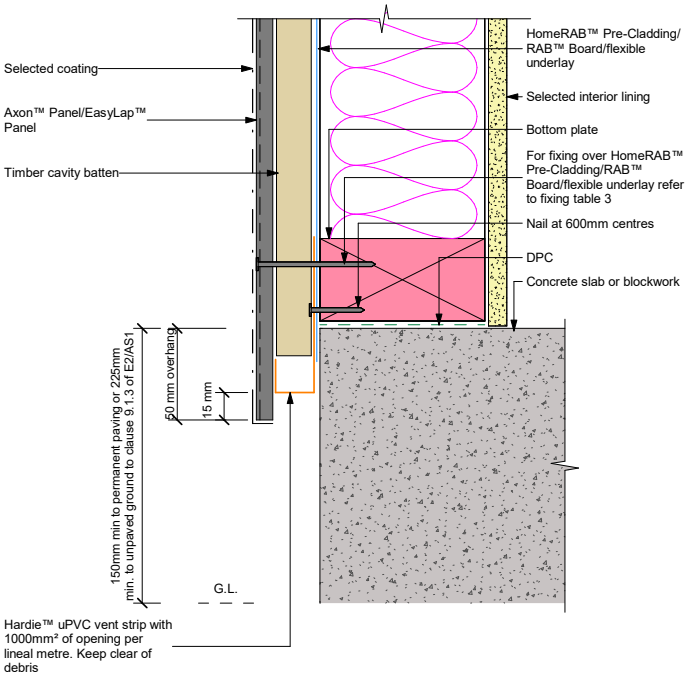

Note: Refer to Section 2.4 for further information

Figure 5: Cavity fixed enclosed deck detail

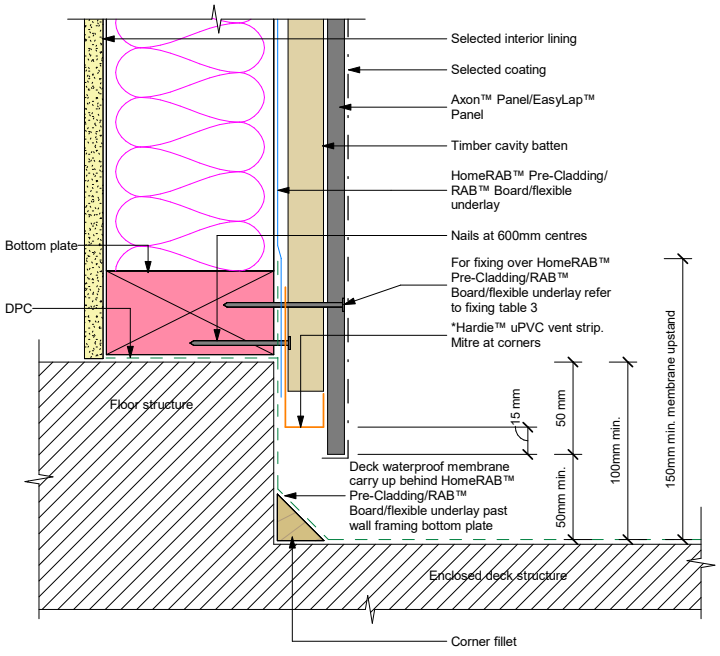

*Drain holes in Hardie™ uPVC vent strip to achieve the required ventilation openings of 1000mm² per lineal metre

KDC - Approved Building Consent Document - 210608 - Minor Variation for cladding change to Axon Board on Cavity - Pg 39 of 58 - 4/04/2022 - aaron.brown

Figure 6: Axon Panel cavity shiplap joint

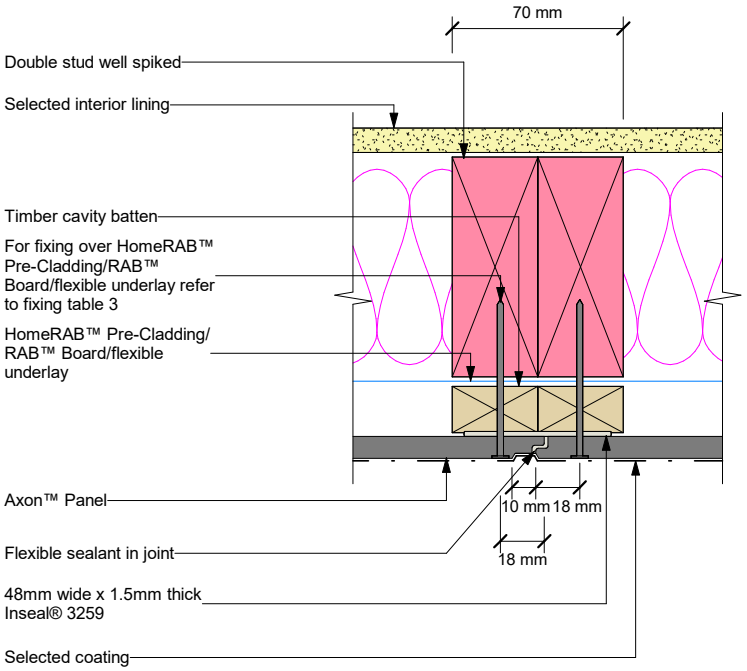

Figure 7: EasyLap Panel cavity shiplap joint

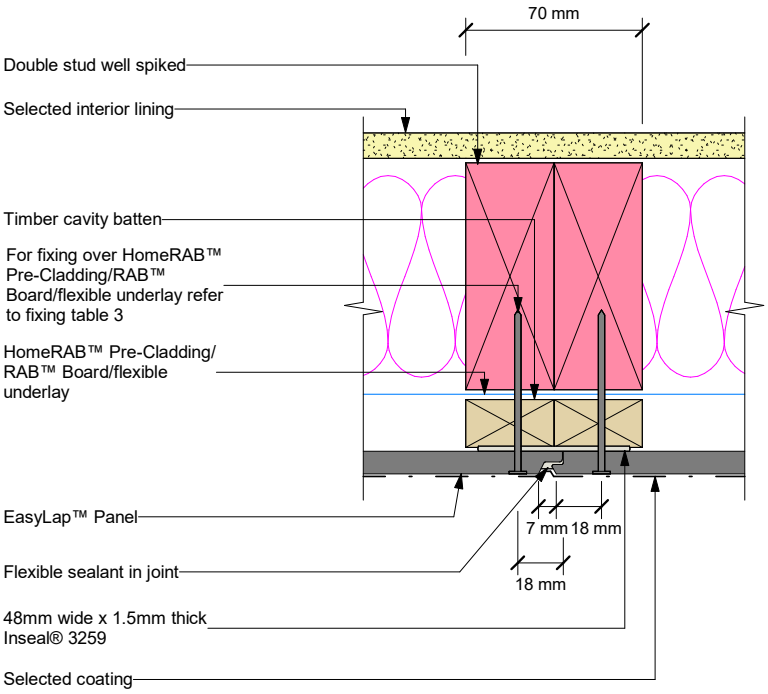

KDC - Approved Building Consent Document - 210608 - Minor Variation for cladding change to Axon Board on Cavity - Pg 40 of 58 - 4/04/2022 - aaron.brown

Figure 8: Cavity internal corner detail

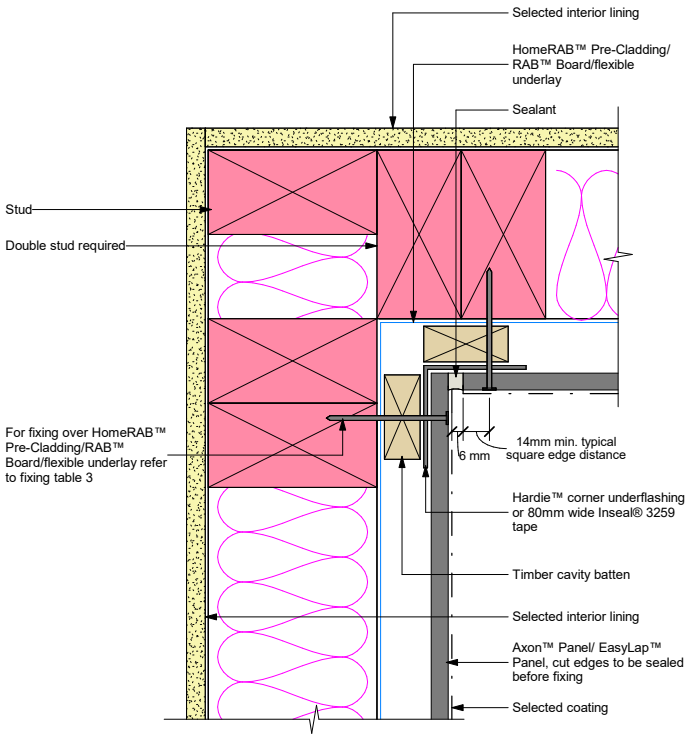

Figure 9: Cavity external corner

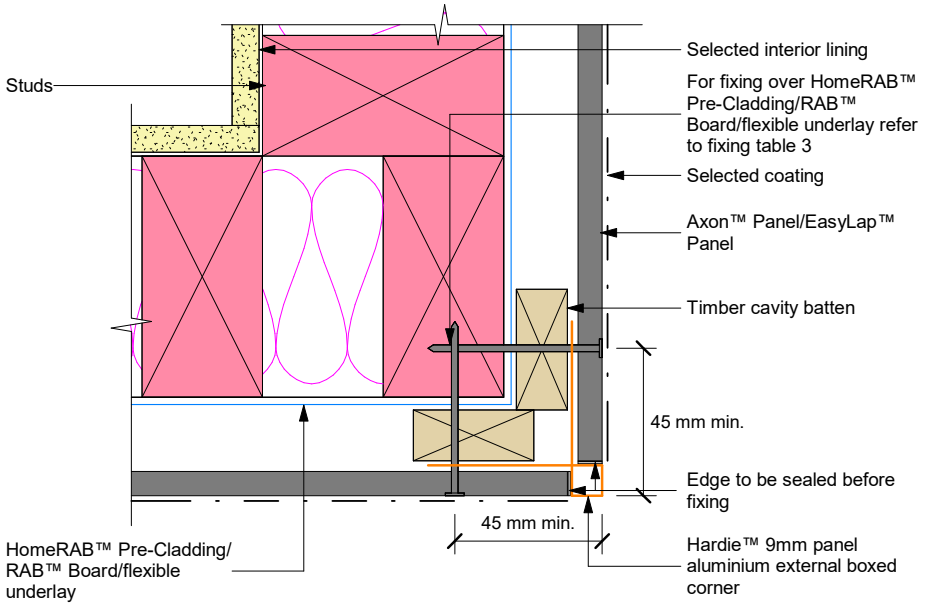

Note:
- Refer to Figure 27 for jointing with 'h' mould
- Do not run corner mould continuous over floor joists.

KDC - Approved Building Consent Document - 210608 - Minor Variation for cladding change to Axon Board on Cavity - Pg 41 of 58 - 4/04/2022 - aaron.brown

Figure 10: Cavity soffit detail

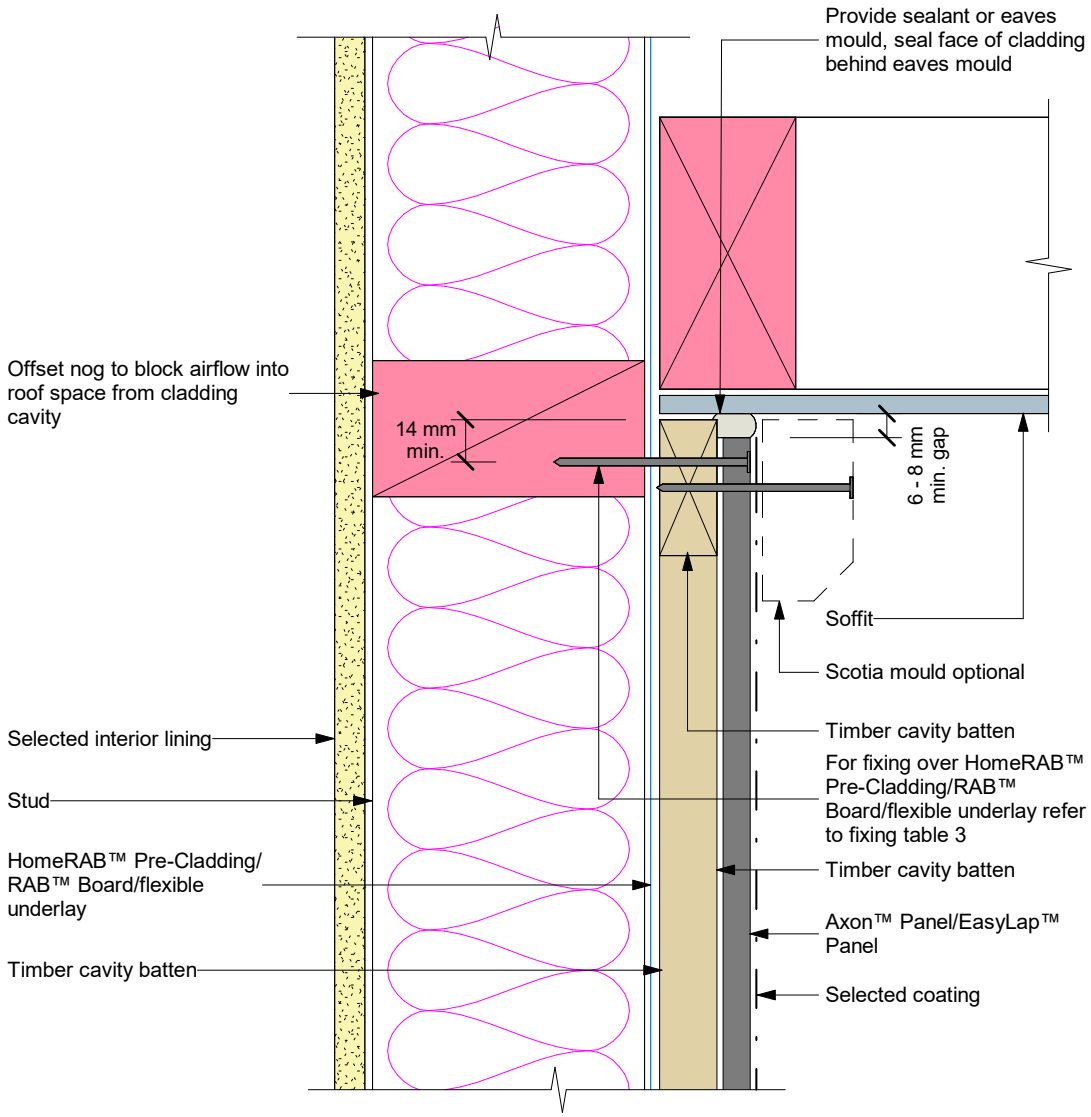

Note: Site cut edges to be primed

KDC - Approved Building Consent Document - 210608 - Minor Variation for cladding change to Axon Board on Cavity - Pg 42 of 58 - 4/04/2022 - aaron.brown

Figure 11: Cavity window head

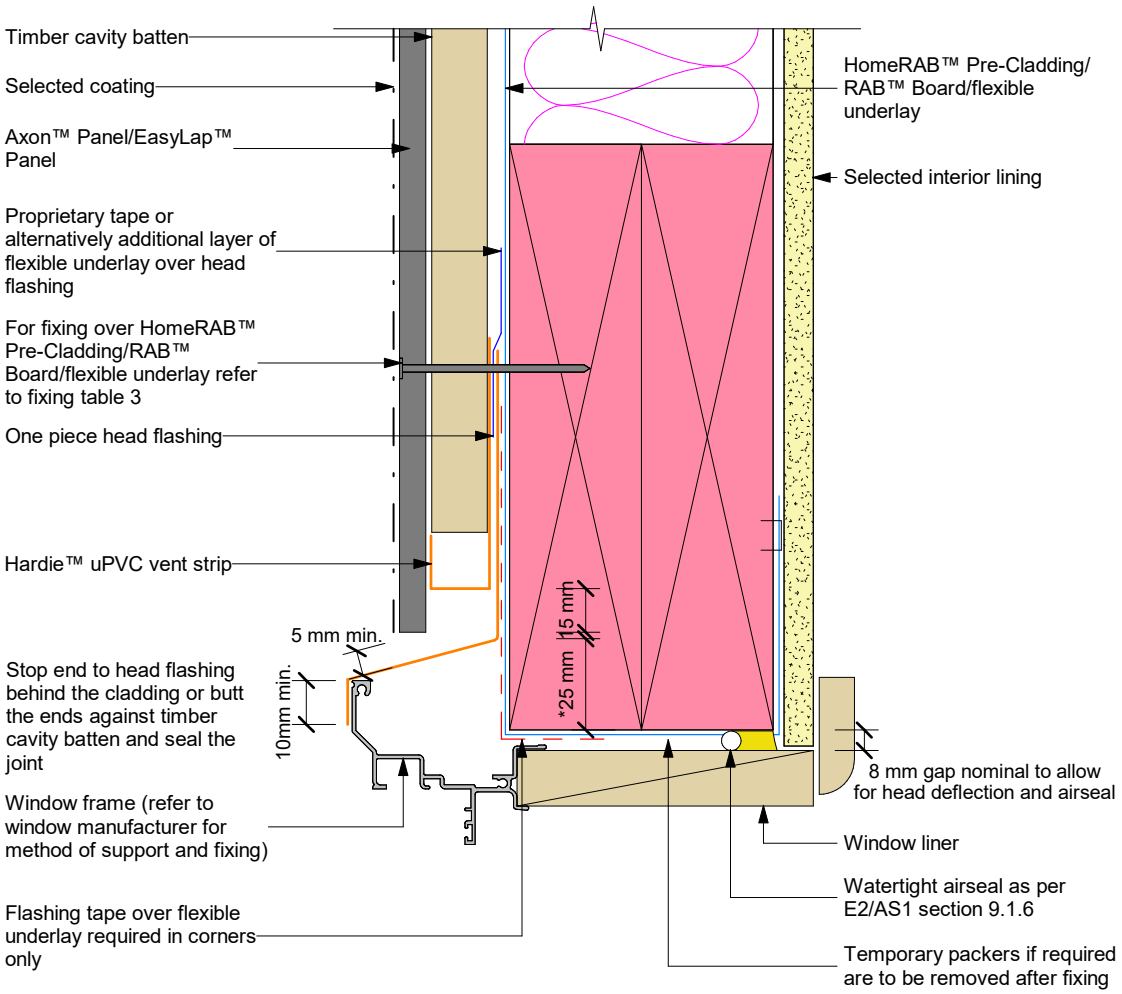

Note:

- When HomeRAB™ Pre-Cladding/ RAB™ Board is used flashing tape to be applied to the entire window opening
- Sealant must be installed between head flashing and window flange in VH and EH wind zones and SED projects
- Alternatively, the head flashing can be formed with stop ends as per E2/AS1

KDC - Approved Building Consent Document - 210608 - Minor Variation for cladding change to Axon Board on Cavity - Pg 43 of 58 - 4/04/2022 - aaron.brown

Figure 12: Cavity window sill

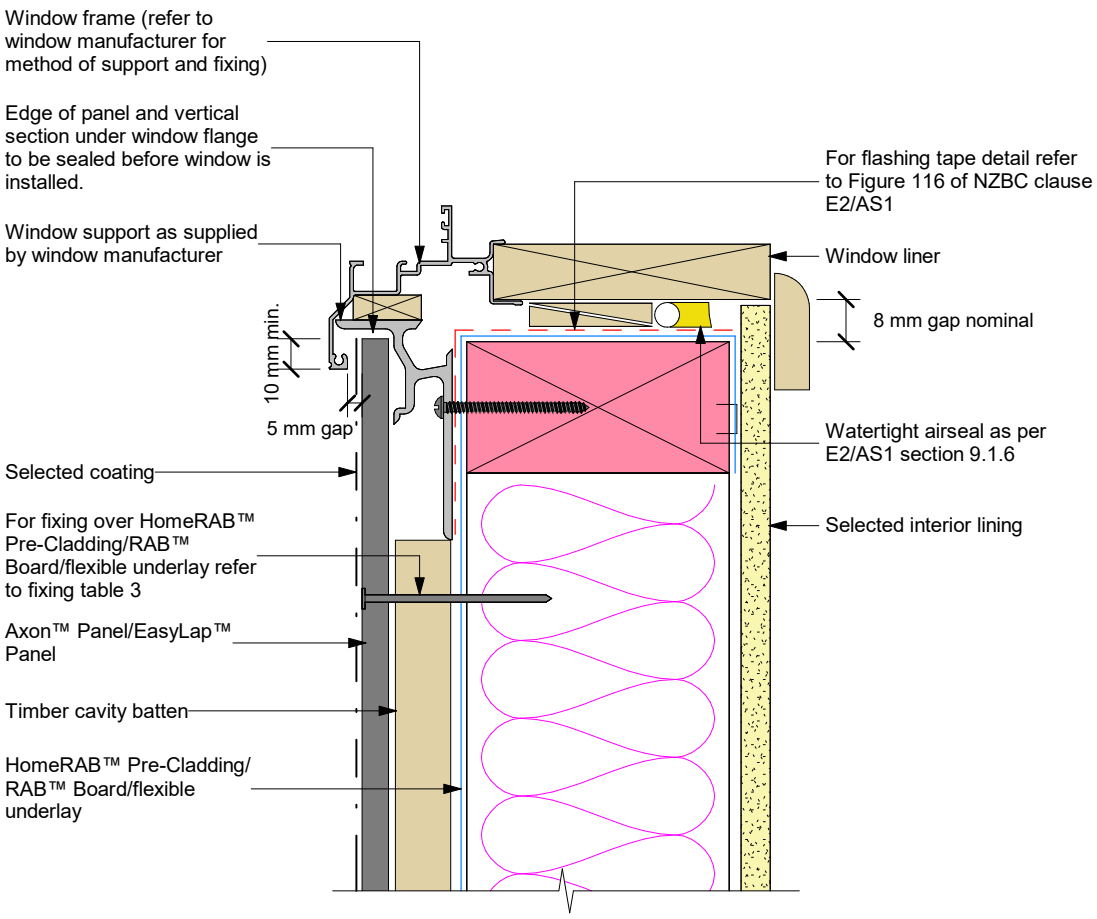

General notes for materials selection

* Flexible underlay must comply with acceptable solution E2/AS.
* Flashing tape must have proven compatibility with the selected flexible underlay and other materials with which it comes into contact.
* When HomeRAB™ Pre-Cladding/ RAB™ Board are used flashing tape to be applied to the entire opening.

Refer to the manufacturer or supplier for technical information for these materials.

KDC - Approved Building Consent Document - 210608 - Minor Variation for cladding change to Axon Board on Cavity - Pg 44 of 58 - 4/04/2022 - aaron.brown

Figure 13: Cavity window jamb

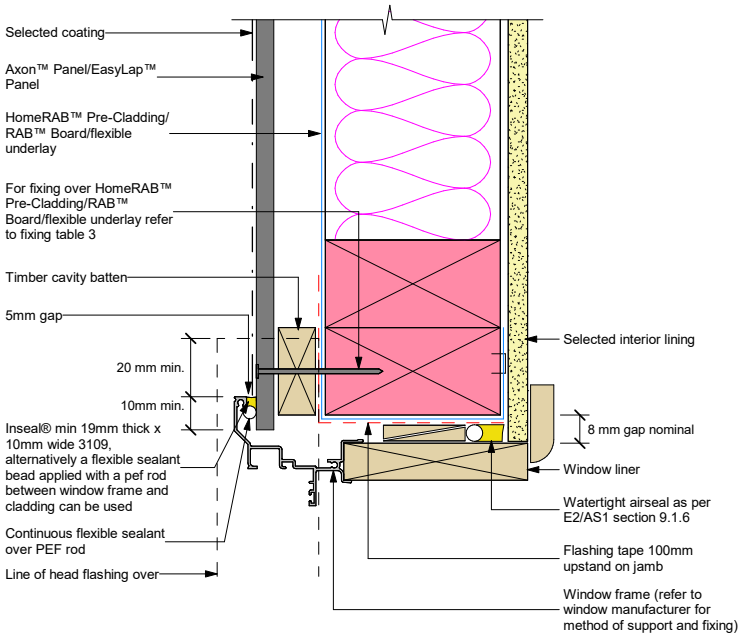

Note: When HomeRAB™ Pre-Cladding/ RAB™ Board is used flashing tape or flexible underlay to be applied to the entire window opening.

Figure 14: Cavity window jamb with scriber

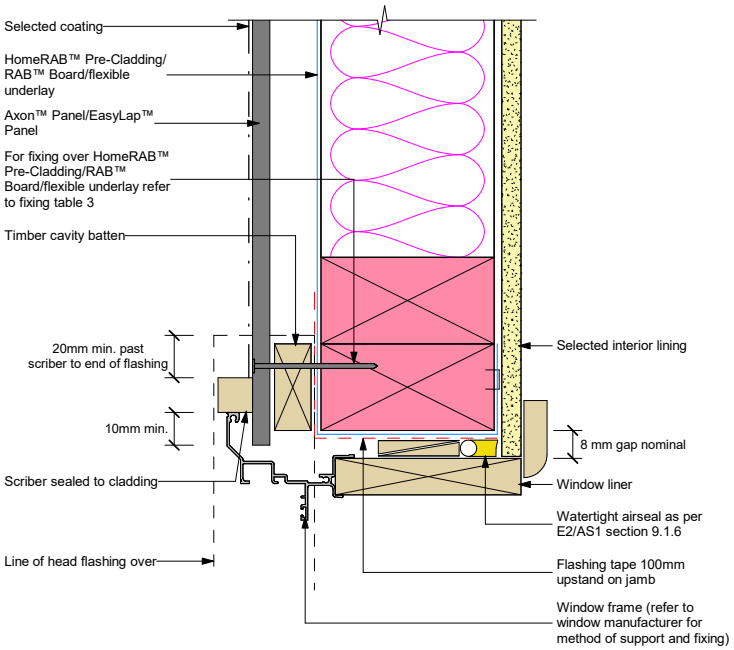

Note: When HomeRAB™ Pre-Cladding/RAB™ Board is used flashing tape to be applied to the entire window opening.

KDC - Approved Building Consent Document - 210608 - Minor Variation for cladding change to Axon Board on Cavity - Pg 45 of 58 - 4/04/2022 - aaron.brown

Figure 15: Cavity alternative head flashing termination against batten

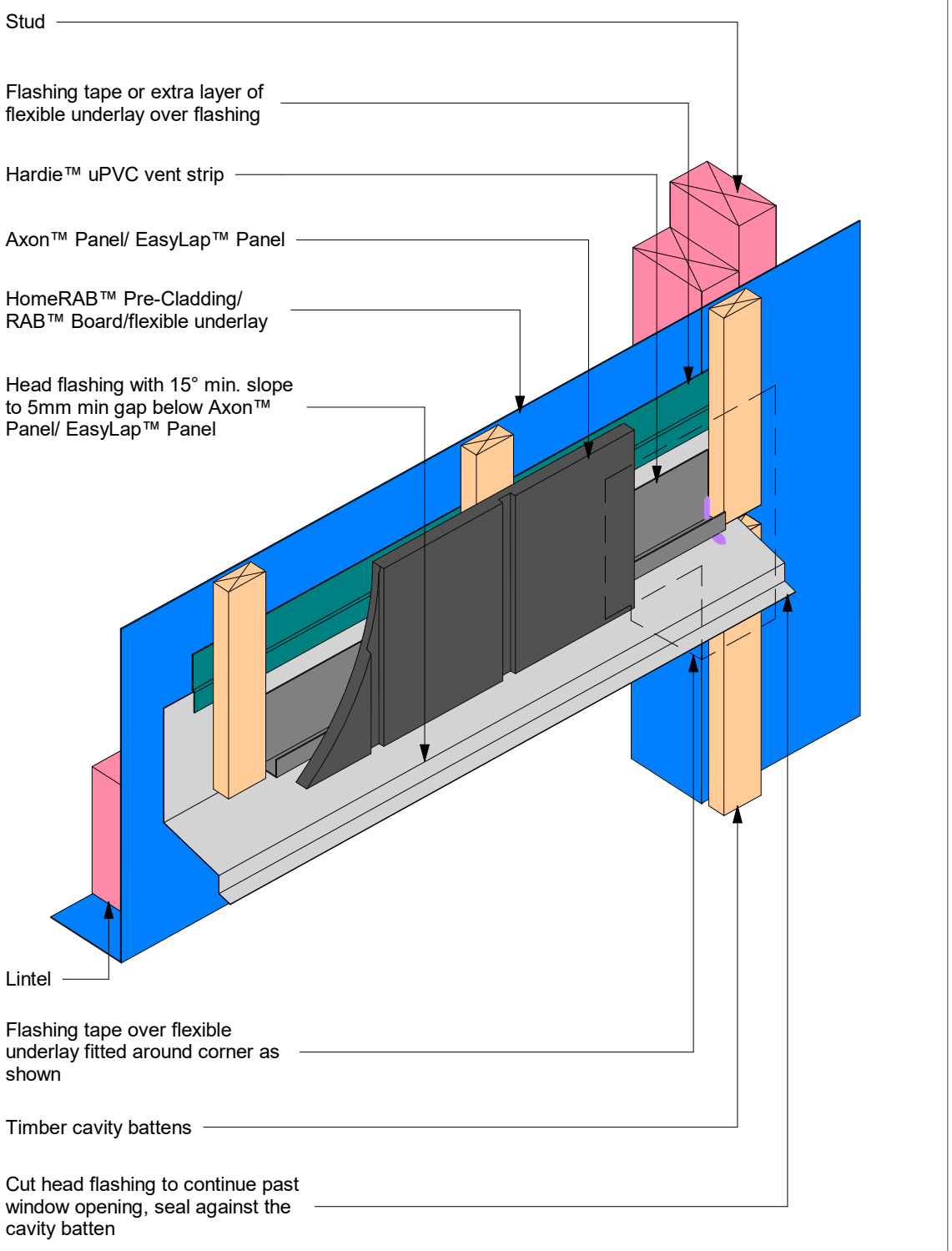

KDC - Approved Building Consent Document - 210608 - Minor Variation for cladding change to Axon Board on Cavity - Pg 46 of 58 - 4/04/2022 - aaron.brown

Figure 16: Cavity horizontal joint detail

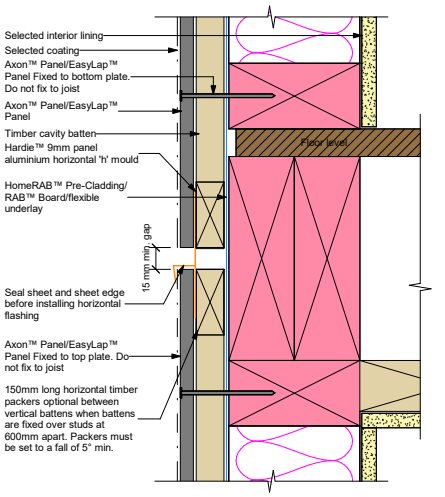

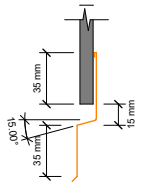

Note: When 50 year durability is required refer Table 20 of NZBC E2/AS1 document.

Alternative Flashing Option

Figure 17: Cavity aluminium 'h' mould jointer

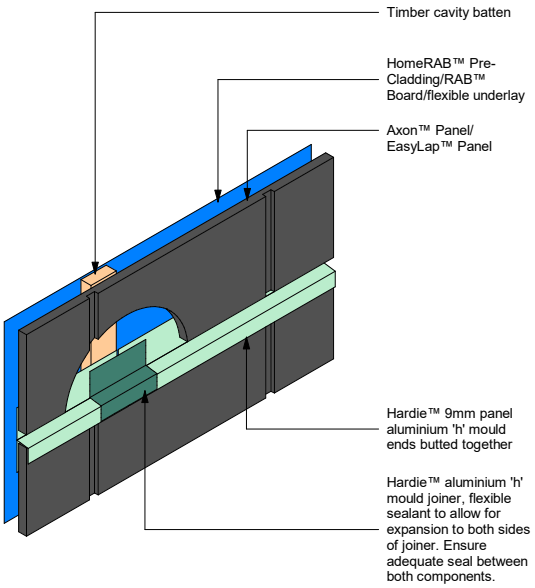

KDC - Approved Building Consent Document - 210608 - Minor Variation for cladding change to Axon Board on Cavity - Pg 47 of 58 - 4/04/2022 - aaron.brown

Figure 18: Cavity corner at 'h' mould joint detail

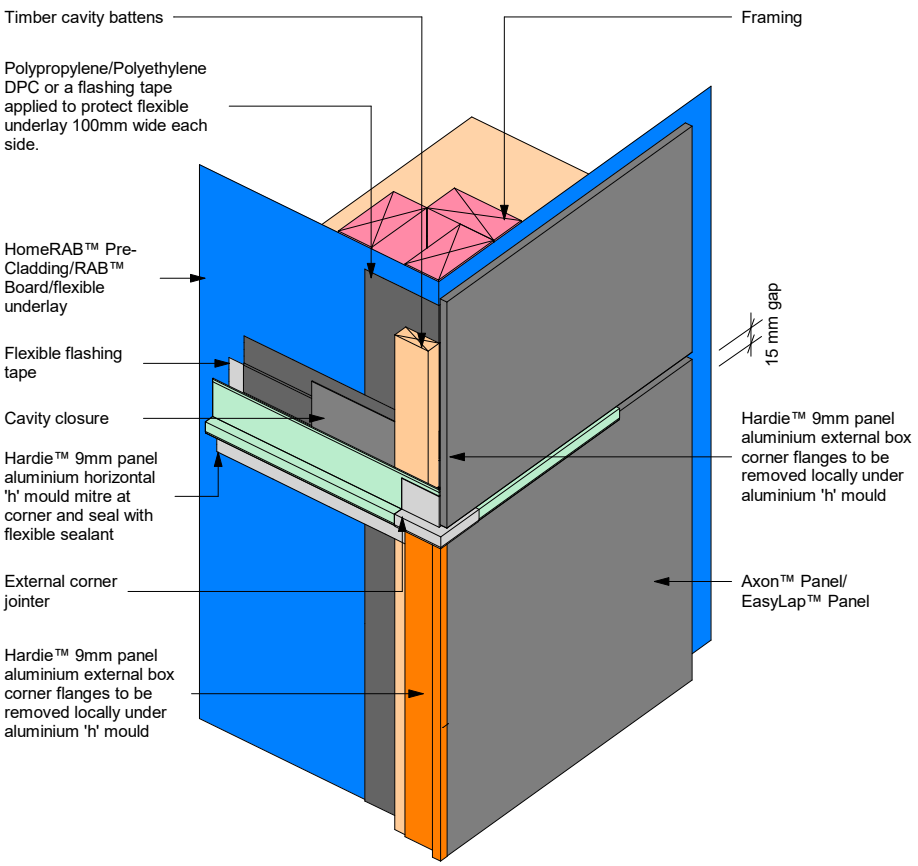

Note: Site cut edges to be primed

KDC - Approved Building Consent Document - 210608 - Minor Variation for cladding change to Axon Board on Cavity - Pg 48 of 58 - 4/04/2022 - aaron.brown

Figure 19: Cavity pipe penetration

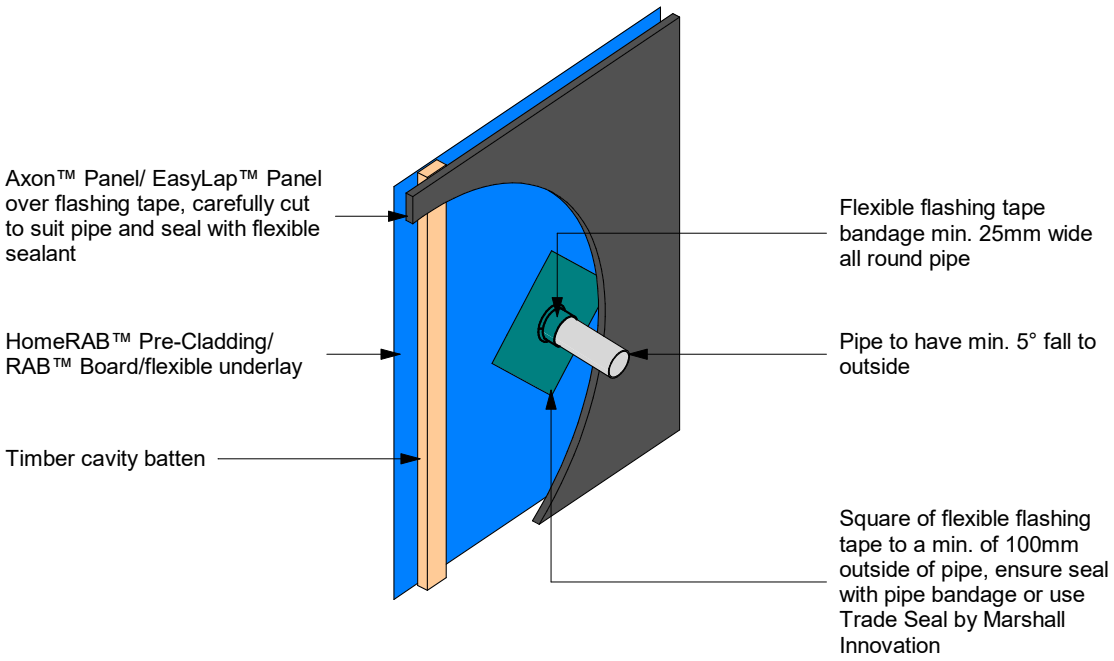

Note: Site cut edges to be primed

KDC - Approved Building Consent Document - 210608 - Minor Variation for cladding change to Axon Board on Cavity - Pg 49 of 58 - 4/04/2022 - aaron.brown

Figure 20: Cavity interstorey drainage

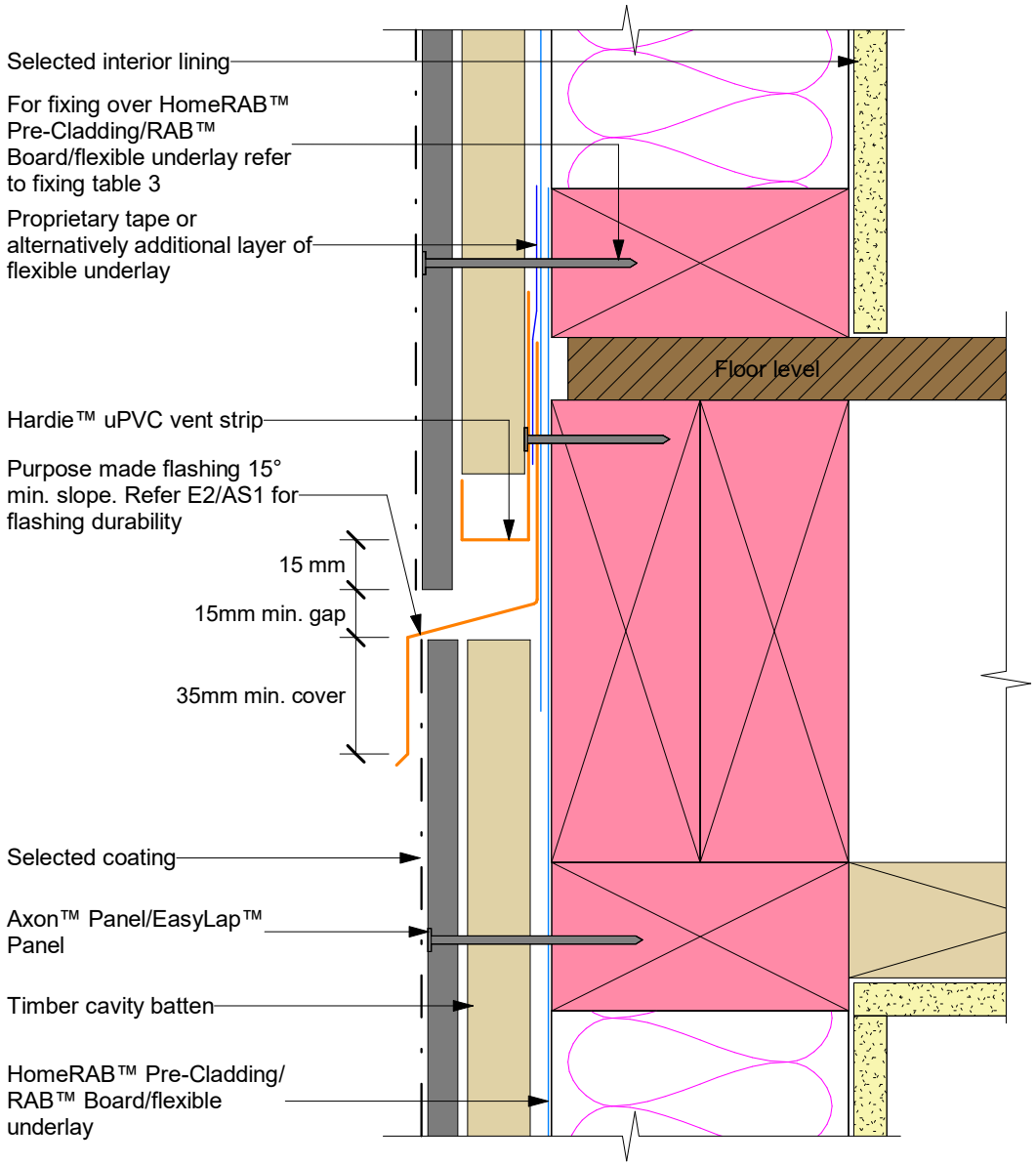

Note:

* Check architect's plans for the type of flashing to be used.
* Check fixing centres and edge distances.
* Cut edges need to be primed with sealer.
* When 50 year durability is required refer Table 20 E2/AS1.
* The flashing to be placed in the centre of the floor joists. Do not fix CLD™ Structural Cavity Battens or panels into floor joists.

KDC - Approved Building Consent Document - 210608 - Minor Variation for cladding change to Axon Board on Cavity - Pg 50 of 58 - 4/04/2022 - aaron.brown

Figure 21: Cavity one piece apron flashing joint

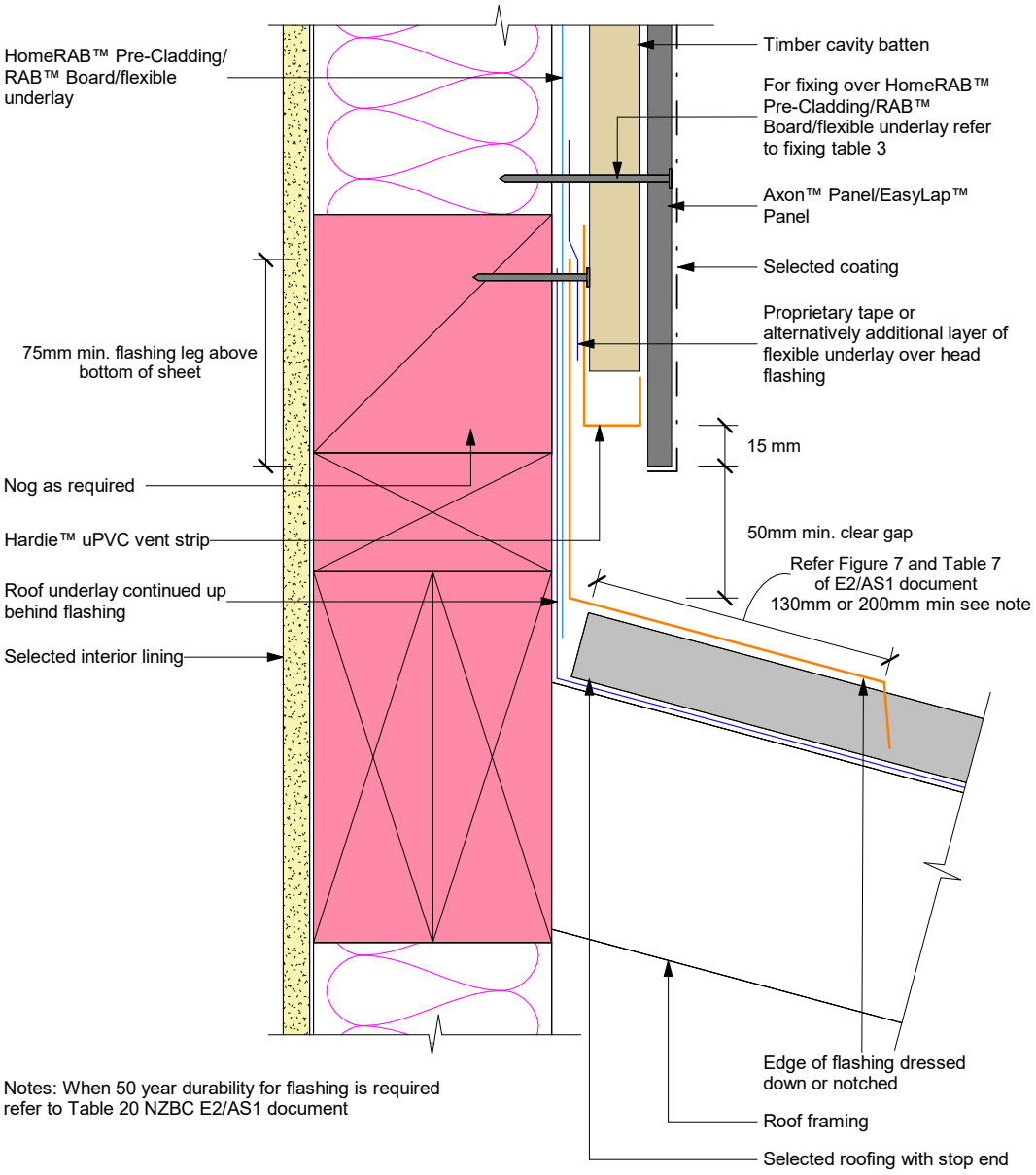

Notes: When 50 year durability for flashing is required refer to Table 20 NZBC E2/AS1 document

KDC - Approved Building Consent Document - 210608 - Minor Variation for cladding change to Axon Board on Cavity - Pg 51 of 58 - 4/04/2022 - aaron.brown

Figure 22: Cavity enclosed deck balustrade to wall junction

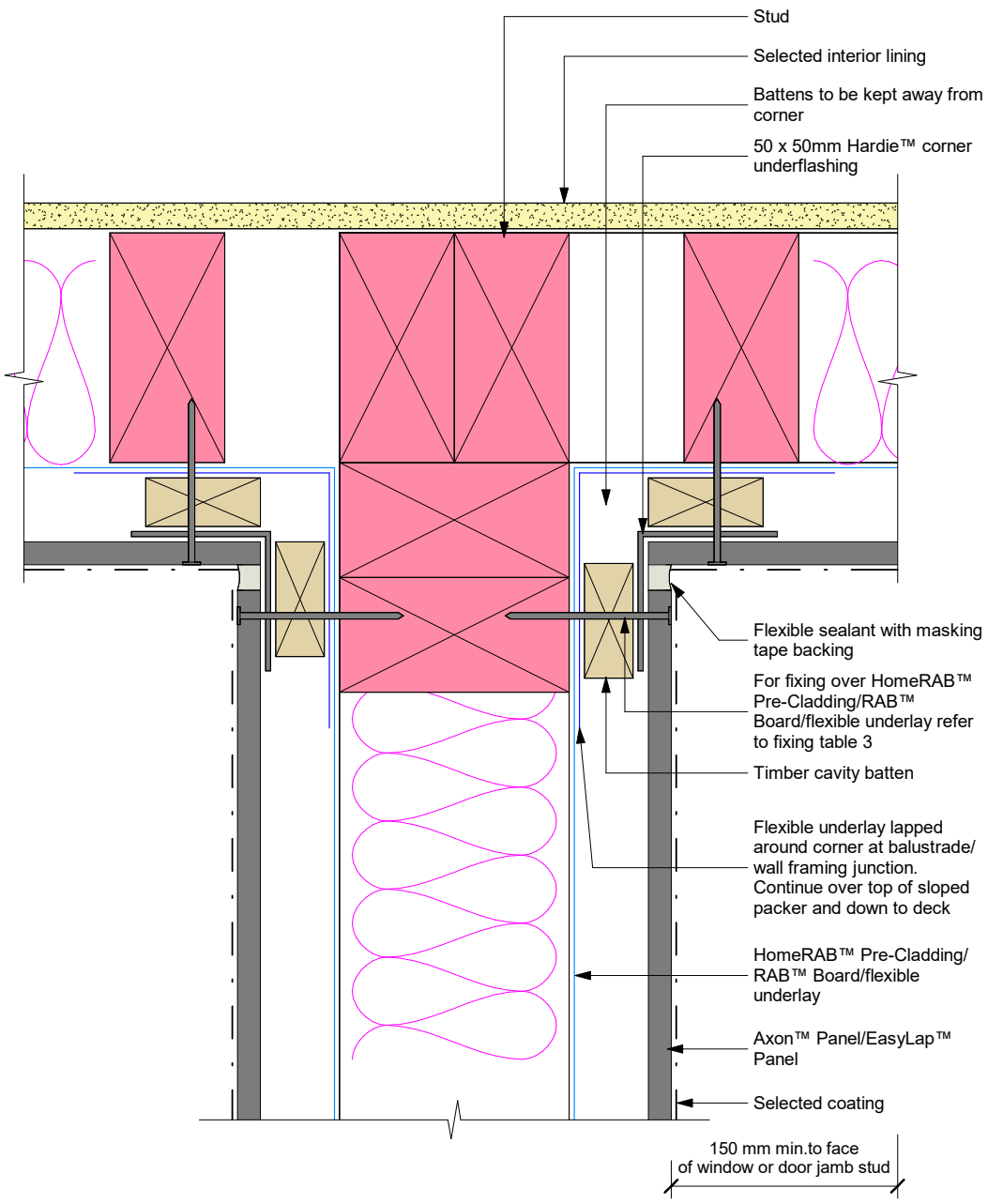

KDC - Approved Building Consent Document - 210608 - Minor Variation for cladding change to Axon Board on Cavity - Pg 52 of 58 - 4/04/2022 - aaron.brown

Figure 23: Cavity balustrade to wall

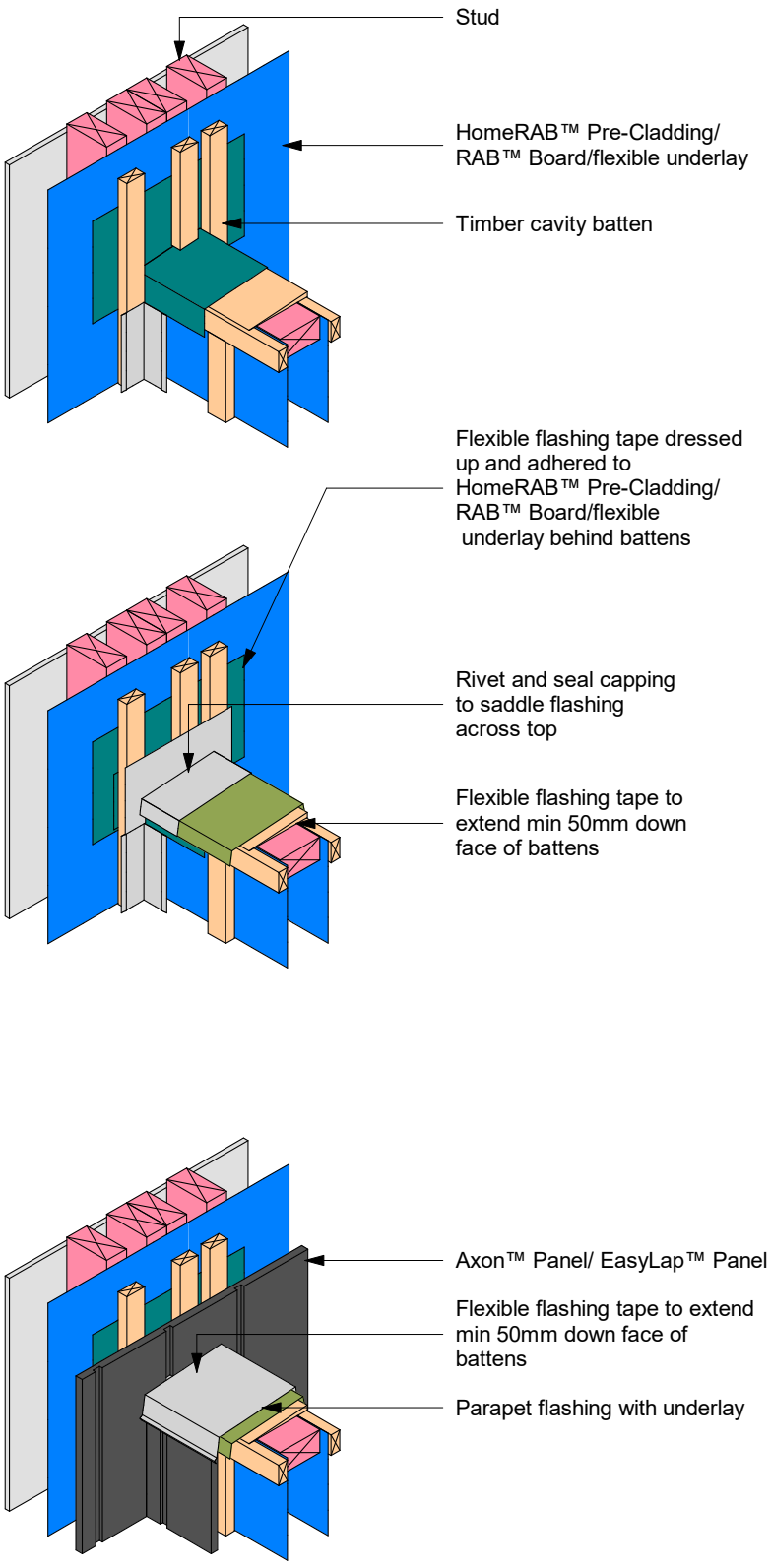

KDC - Approved Building Consent Document - 210608 - Minor Variation for cladding change to Axon Board on Cavity - Pg 53 of 58 - 4/04/2022 - aaron.brown

Figure 24: Cavity parapet flashing

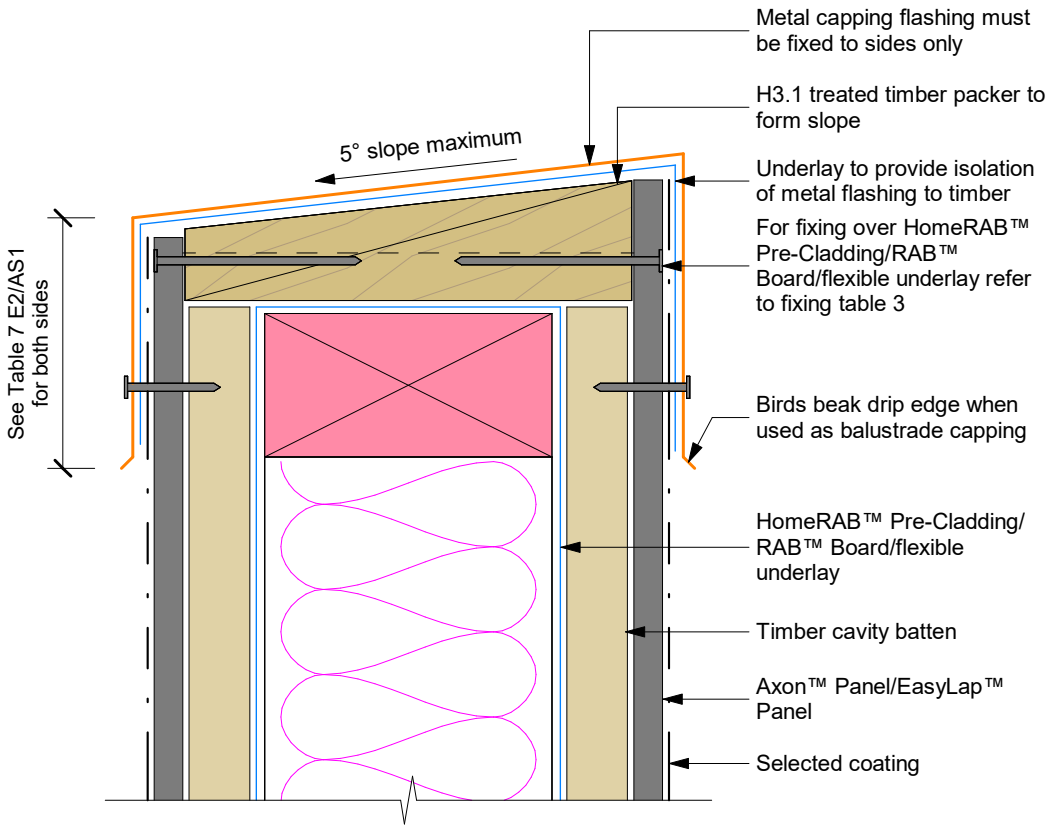

KDC - Approved Building Consent Document - 210608 - Minor Variation for cladding change to Axon Board on Cavity - Pg 54 of 58 - 4/04/2022 - aaron.brown

Figure 25: Cavity roof to wall junction detail

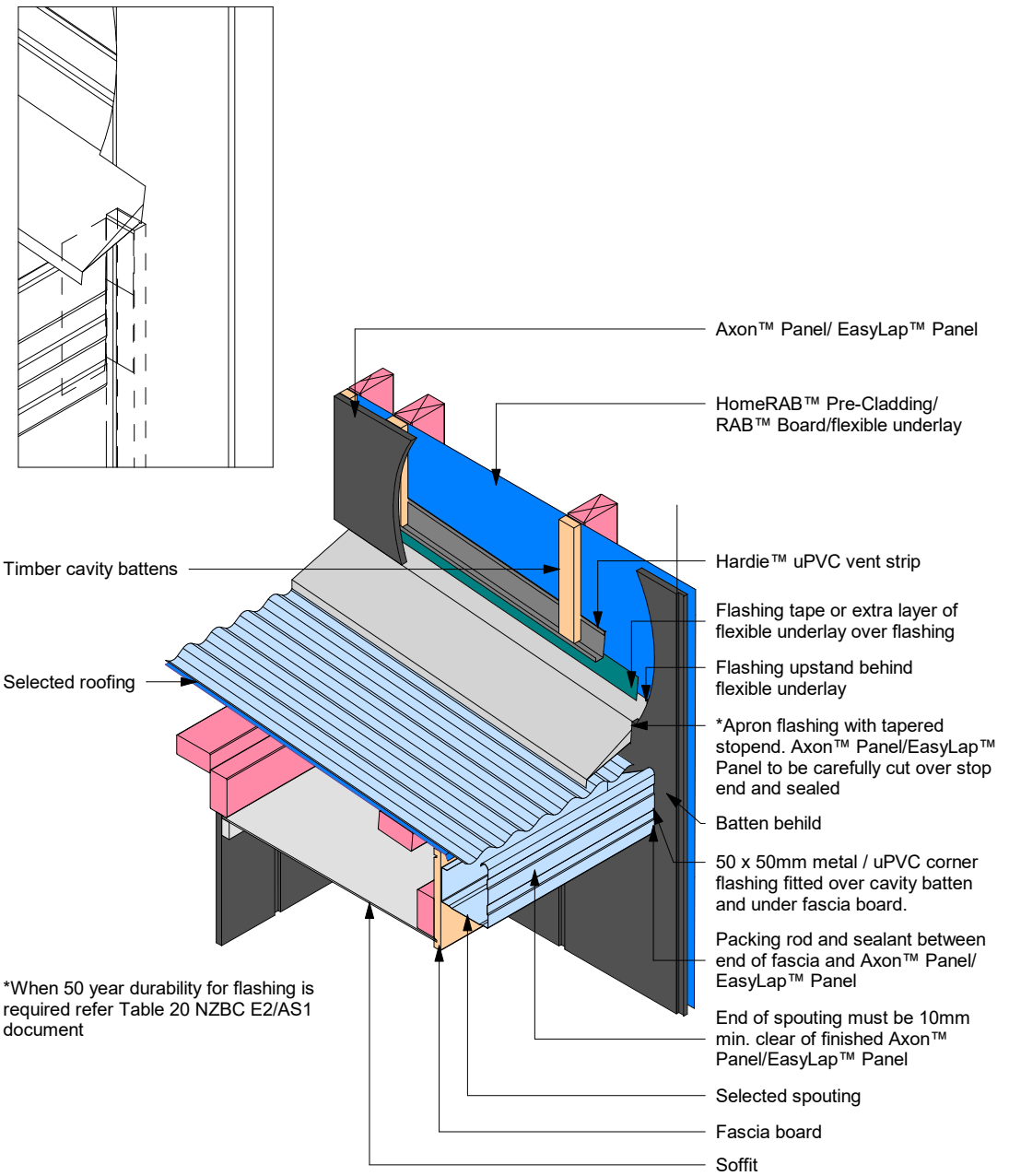

Note: Site cut edges to be primed

Axon™ Panel

Product Warranty

James Hardie New Zealand Limited ("James Hardie") warrants for a period of 15 years from the date of purchase that the Axon™ Panel (the "Product"), will be free from defects due to defective factory workmanship or materials and, subject to compliance with the conditions below, will be resistant to cracking, rotting, fire and damage from termite attacks to the extent set out in James Hardie's relevant published literature current at the time of installation. James Hardie warrants for a period of 15 years from the date of purchase that the accessories supplied by James Hardie will be free from defects due to defective factory workmanship or materials.

Nothing in this document shall exclude or modify any legal rights a customer may have under the Consumer Guarantees Act or otherwise which cannot be excluded or modified at law.

CONDITIONS OF WARRANTY:

The warranty is strictly subject to the following conditions:

a) James Hardie will not be liable for breach of warranty unless the claimant provides proof of purchase and makes a written claim either within 30 days after the defect would have become reasonably apparent or, if the defect was reasonably apparent prior to installation, then the claim must be made prior to installation.

b) This warranty is not transferable.

c) The Product must be installed and maintained strictly in accordance with the relevant James Hardie literature current at the time of installation and must be installed in conjunction with the components or products specified in the literature. Further, all other products, including coating and jointing systems, applied to or used in conjunction with the Product must be applied or installed and maintained strictly in accordance with the relevant manufacturer's instructions and good trade practice.

d) The project must be designed and constructed in strict compliance with all relevant provisions of the current New Zealand Building Code ("NZBC"), regulations and standards.

e) The claimant's sole remedy for breach of warranty is (at James Hardie's option) that James Hardie will either supply replacement product, rectify the affected product or pay for the cost of the replacement or rectification of the affected product.

f) James Hardie will not be liable for any losses or damages (whether direct or indirect) including property damage or personal injury, consequential loss, economic loss or loss of profits, arising in contract or negligence or howsoever arising. Without limiting the foregoing James Hardie will not be liable for any claims, damages or defects arising from or in any way attributable to poor workmanship, poor design or detailing, settlement or structural movement and/or movement of materials to which the Product is attached, incorrect design of the structure, acts of God including but not limited to earthquakes, cyclones, floods or other severe weather conditions or unusual climatic conditions, efflorescence or performance of paint/coatings applied to the Product, normal wear and tear, growth of mould, mildew, fungi, bacteria, or any organism on any Product surface or Product (whether on the exposed or unexposed surfaces).

g) All warranties, conditions, liabilities and obligations other than those specified in this warranty are excluded to the fullest extent allowed by law.

h) If meeting a claim under this warranty involves re-coating of Products, there may be slight colour differences between the original and replacement Products due to the effects of weathering and variations in materials over time.

Disclaimer: The recommendations in James Hardie's literature are based on good building practice, but are not an exhaustive statement of all relevant information and are subject to conditions (c), (d), (f) and (g) above. James Hardie has tested/assessed the performance of the Axon™ Panel when installed in accordance with the Axon™ Panel technical specification, in accordance with the standards and verification methods required by the NZBC and those test results demonstrate the product complies with the performance criteria established by the NZBC. However, as the successful performance of the relevant system depends on numerous factors outside the control of James Hardie (e.g. quality of workmanship and design) James Hardie shall not be liable for the recommendations made in its literature and the performance of the relevant system, including its suitability for any purpose or ability to satisfy the relevant provisions of the NZBC, regulations and standards, as it is the responsibility of the building designer to ensure that the details and recommendations provided in the relevant James Hardie installation manual are suitable for the intended project and that specific design is conducted where appropriate.

© 2022. James Hardie New Zealand Limited. TM and ® denotes a Trademark or Registered Mark owned by James Hardie Technology Limited.

KDC - Approved Building Consent Document - 210608 - Minor Variation for cladding change to Axon Board on Cavity - Pg 55 of 58 - 4/04/2022 - aaron.brown

EasyLap™ Panel

Product Warranty

James Hardie New Zealand Limited ("James Hardie") warrants for a period of 15 years from the date of purchase that the EasyLap™ Panel (the "Product"), will be free from defects due to defective factory workmanship or materials and, subject to compliance with the conditions below, will be resistant to cracking, rotting, fire and damage from termite attacks to the extent set out in James Hardie's relevant published literature current at the time of installation. James Hardie warrants for a period of 15 years from the date of purchase that the accessories supplied by James Hardie will be free from defects due to defective factory workmanship or materials.

Nothing in this document shall exclude or modify any legal rights a customer may have under the Consumer Guarantees Act or otherwise which cannot be excluded or modified at law.

CONDITIONS OF WARRANTY:

The warranty is strictly subject to the following conditions:

a) James Hardie will not be liable for breach of warranty unless the claimant provides proof of purchase and makes a written claim either within 30 days after the defect would have become reasonably apparent or, if the defect was reasonably apparent prior to installation, then the claim must be made prior to installation.

b) This warranty is not transferable.

c) The Product must be installed and maintained strictly in accordance with the relevant James Hardie literature current at the time of installation and must be installed in conjunction with the components or products specified in the literature. Further, all other products, including coating and jointing systems, applied to or used in conjunction with the Product must be applied or installed and maintained strictly in accordance with the relevant manufacturer's instructions and good trade practice.

d) The project must be designed and constructed in strict compliance with all relevant provisions of the current New Zealand Building Code ("NZBC"), regulations and standards.

e) The claimant's sole remedy for breach of warranty is (at James Hardie's option) that James Hardie will either supply replacement product, rectify the affected product or pay for the cost of the replacement or rectification of the affected product.

f) James Hardie will not be liable for any losses or damages (whether direct or indirect) including property damage or personal injury, consequential loss, economic loss or loss of profits, arising in contract or negligence or howsoever arising. Without limiting the foregoing James Hardie will not be liable for any claims, damages or defects arising from or in any way attributable to poor workmanship, poor design or detailing, settlement or structural movement and/or movement of materials to which the Product is attached, incorrect design of the structure, acts of God including but not limited to earthquakes, cyclones, floods or other severe weather conditions or unusual climatic conditions, efflorescence or performance of paint/coatings applied to the Product, normal wear and tear, growth of mould, mildew, fungi, bacteria, or any organism on any Product surface or Product (whether on the exposed or unexposed surfaces).

g) All warranties, conditions, liabilities and obligations other than those specified in this warranty are excluded to the fullest extent allowed by law.

h) If meeting a claim under this warranty involves re-coating of Products, there may be slight colour differences between the original and replacement Products due to the effects of weathering and variations in materials over time.

Disclaimer: The recommendations in James Hardie's literature are based on good building practice, but are not an exhaustive statement of all relevant information and are subject to conditions (c), (d), (f) and (g) above. James Hardie has tested/assessed the performance of the EasyLap™ Panel when installed in accordance with the EasyLap™ Panel technical specification, in accordance with the standards and verification methods required by the NZBC and those test results demonstrate the product complies with the performance criteria established by the NZBC. However, as the successful performance of the relevant system depends on numerous factors outside the control of James Hardie (e.g. quality of workmanship and design) James Hardie shall not be liable for the recommendations made in its literature and the performance of the relevant system, including its suitability for any purpose or ability to satisfy the relevant provisions of the NZBC, regulations and standards, as it is the responsibility of the building designer to ensure that the details and recommendations provided in the relevant James Hardie installation manual are suitable for the intended project and that specific design is conducted where appropriate.

© 2022. James Hardie New Zealand Limited. TM and ® denotes a Trademark or Registered Mark owned by James Hardie Technology Limited.

KDC - Approved Building Consent Document - 210608 - Minor Variation for cladding change to Axon Board on Cavity - Pg 56 of 58 - 4/04/2022 - aaron.brown

KDC - Approved Building Consent Document - 210608 - Minor Variation for cladding change to Axon Board on Cavity - Pg 57 of 58 - 4/04/2022 - aaron brown



JamesHardie™

Ask James Hardie™ | Call 0800 808 868 | jameshardie.co.nz

© 2022. James Hardie New Zealand Limited. TM and ® denotes a Trademark or Registered Mark owned by James Hardie Technology Limited.
Inseal®, Tyvek®, Protecto®, Thermakraft(TM) and Timbakote® are trademarks of their respective owners.

Product Technical Statement

Product Description: Axon™ Panel is a 9mm thick vertical grooved ship-lapped edge panel manufactured using low density fibre cement formulation.

Scope of Use: Axon Panel installed using CLD™ Structural Cavity Battens or timber cavity battens is suitable for use as external wall cladding in residential buildings within the scope of E2/AS1, or in residential/commercial buildings exposed to design wind pressure up to 2.5kPa (ULS) maximum covered by a specific engineering design (SED).

Axon Panel can also be installed direct to the framing (without cavity) for residential buildings within or up to the risk score 6 calculated as per Table-2 of E2/AS1. Axon Panel can also be used for external wall bracing applications in residential buildings as per NZS 3604.

Limitations: Axon Panel must not be installed horizontally or in curved wall applications or in situations where it stays in contact with ground moisture.

Compliance with NZBC: The following clauses of the NZBC are applicable to Axon Panel and it complies with these requirements as explained below;

Structure - B1: Uniform Distributed Load tests have been completed at a NATA accredited James Hardie laboratory.

Axon Panel installed as per its technical specifications is suitable for use up to design wind pressures of 2.5kPa and meets the requirements of Clause-B1.3.1, B1.3.2 and B1.3.3 of NZBC.

Axon™ Panels have been tested as per BRANZ P21 test method and are suitable for structural bracing.

Durability - B2**:** Axon Panel and CLD Structural Cavity Battens have been tested at a NATA accredited laboratory in accordance with AS/NZS 2908.2 and meets the durability performance requirements as per Clause B2.3.1(a) and B2.3.2 of NZBC.

Fire Performance - C: Axon Panel has been assessed and is classified as 'non-combustible' material and is suitable for use on external walls close to boundaries.

External Moisture - E2: Axon Panel has been tested as per the details published for weathertightness as per E2/VM1 (as contained within NZBC Clause E2).

Hazardous Building Materials - F2*:* Axon Panel complies with the requirements of F2.3.1 and will not present a health hazard when handled as per its technical specifications.

Energy Efficiency - H1: Axon Panel walls constructed using bulk insulation meets the construction R-Value requirements as per Table 1 of Clause H1.

Installation: Axon Panel must be installed in accordance with the current Axon Panel Technical Specification. The specification and details are available at James Hardie web site www.jameshardie.co.nz or Ask James Hardie™ at 0800 808 868 for further information.

Warranty: Axon Panel has a product warranty of 15 years when installed and maintained as per the current technical specification.

Copy right April 2019. © James Hardie New Zealand Limited. ™ and ® Denotes a trademark or registered trademark owned by James Hardie Technology Limited.

KDC - Approved Building Consent Document - 210608 - Minor Variation for cladding change to Axon Board on Cavity - Pg 58 of 58 - 4/04/2022 - aaron.brown






HOT CHILI PEPPERS REUP



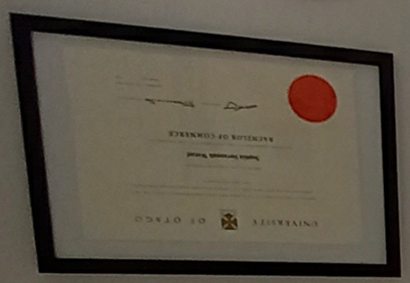


















WARNING: HIGH VOLTAGE
DISCONNECT POWER BEFORE
REMOVING THIS COVER

Compliance and Electrical Safety Certificate
Unique ID: 5218.1/E243604

This form has been designed to be used by licensed electrical workers to certify that installations or Part installations under Part 1 or Part 2 of AS/NZS 3000 are safe to be connected to the specified system of electrical supply.

(1) Location of Installation or Part Installation

Address: 752 Settlement Road, RD 5, Hakaru, Wellsford 0975

(2) Customer / Occupier / Owner Information

Name: Gina Utting

Address: 752 Settlement Road, RD 5, Hakaru, Wellsford 0975

Email: ginautting@gmail.com Phone:

(3) Electrical Worker Information

Name: Carl Gordon Registration/Practising Licence No.: E243604

Organisation: Carl Gordon Electrical Ltd

Phone: 022 071 0245 Email: carl@cge.co.nz

Name of person(s) being supervised: Ben Leese

(4) Work Details

This work is: ☐ Is New Work ☑ Is Addition ☐ Is Alteration ☐ Is Maintenance

The prescribed electrical work is: ☐ Home Owner ☐ Low Risk ☑ General ☐ High Risk

Reference Standards: ☐ Part 1 of AS/NZS 3000 ☑ Part 2 of AS/NZS 3000 ☐ AS/NZS 3012

☐ Additional Standards

Indicate the number of each item installed or altered:

Lighting Outlets: 11 Socket Outlets: 11 Ranges: Water Heaters: 1

Work Done: Garage/sleeput electrical installation. Wire and install 11 light fittings, 11 double socket outlets, 2 socket outlets for garage doors, 1 extraction fan, 1 hot water cylinder. Install single phase sub main from house to garage with sub board in garage. Install RCD protection on all lighting and socket outlet circuits.

The work was done within the period: Date Commenced: 14/12/2022 Date Completed: 14/12/2022

(5) Certification of Work

I certify that the completed prescribed electrical work to which this certificate applies, has been done lawfully and safely and the information in the certificate is correct in that the installation, or part of the installation:

☑ Relies on manufacturer's instructions ☐ Attached/Ref

☑ Relies on Declaration of Conformity ☐ Attached/Ref

☐ Accordance with certified design ☐ Attached/Ref

Reference:

☑ Tested in accordance with ESR2010

☑ Earthing system that is correctly rated

☑ Fittings safe to connect

☑ Safe to connect to a power supply

Test Results	
Continuity of Earthing System:	
Insulation Resistance:	299+ M Ohm
Polarity – Correct Circuit Connections:	
Verification of Impedance:	
Bonding:	
Other:	

Signature: Date: 14/12/2022

(6) Electrical Safety Certificate

(to be completed by the person who connects the installation, or part installation to the power supply)

I certify that the installation, or part of the installation as described above, to which this Electrical Safety Certificate applies is connected to a power supply and is safe to use. If maintenance, alteration or addition, has not adversely affected any other part of the installation.

Name: Carl Gordon Registration/Practising Licence No: E243604

Signature: Issue Date: 14/12/2022 Connection Date: 14/12/2022

KAIPARA DISTRICT
Kaipara te Oranganui • Two Oceans Two Harbours

Onsite application for minor variations to approved plans

This application is to advise Kaipara District Council that the following minor variation is proposed to be undertaken on the building situated at the address listed below. Please refer to the government's website for guidance information about what constitutes a minor variation. https://www.building.govt.nz It is the owners (or their authorised agents) responsibility to notify Council of any changes to the approved plans; this variation must be provided to, **and** be approved by the Building Inspector on site. All changes must be approved before work proceeds.

Building consent Nº.	BC210608.1	Reference Nº.		Plan Nº.	Shts 2-4, 6 & 8.
Site Address:	752 Settlement Road Kaiwaka				
Owner/agents name:	Gina Utting				
Postal address:	752 Settlement Road Kaiwaka Postcode:				
Email address	ginautting@gmail.com				
Applicants role in project	Owner				
Contact telephone	0212670724				

Record of variation: *(please identify location and provide a detailed description of the variation)*

☑ Two copies of plans must accompany application *(must be handed to Inspector for inspection to proceed)*

☑ A certificate of design work is required for minor variations where Restricted Building Work is involved.

☑ Product Variations must be agreed to by the owner in writing (insulation, plasterboard changes etc.)

Note: *Owners need to be made aware of product variations and the BCA requires written evidence of this. Significant change is not a minor variation but a formal amendment. No work may proceed for formal amendments until processed, stamped approved plans are on site. If work has been completed, no consent can be issued as this is a breach of the Building Act. In this case, infringement & C.O.A requirements may apply.*

Description of change:
Due to unavailability of consented cladding (Shadowclad) the cladding is changed to Hardies Axon Board on cavity. Paint finish. Refer sheets 2,3,4, 6 and 8/ Rev B.

Owner signature:			
Agents signature:	R Swain	Date:	16.3.220

Please use this table for describing changes to bracing elements, window sizes, etc.

3120.18
Document1

IM:vrh

KDC - Approved Building Consent Document - 210608 - Minor Variation for cladding change to Axon Board on Cavity - Pg 1 of 58 - 4/04/2022 - aaron.brown

KAIPARA DISTRICT

Was	*Reason for changes: altered, removed, replaced, deleted*	*Now*

☐ Reduced scope of work (if ticked, please describe items that will not be constructed.

Council use only:

The variation is minor and does not materially affect compliance ☑ Yes ☐ No

Work may proceed ☑ Yes ☐ No

Variation ☑ Approved ☐ Declined

Inspector's signature: _____ Date: 4th April 2022

Inspector's name: Aaron Brown

Note: If the scope of work has been reduced, please check the computer to see whether an update is required to the description of work.

KDC - Approved Building Consent Document - 210608 - Minor Variation for cladding change to Axon Board on Cavity - Pg 2 of 58 - 4/04/2022 - aaron.brown

KDC - Approved Building Consent Document - 210608 - Minor Variation for cladding change to Axon Board on Cavity - Pg 3 of 58 - 4/04/2022 - aaron.brown

Memorandum from licensed building practitioner: Certificate of design work

Section 45 and section 30C, Building Act 2004

Please fill in the form as fully and correctly as possible.

If there is insufficient room on the form for requested details, please continue on another sheet and attach the additional sheet(s) to this form.

THE BUILDING	
Street address: 752 Settlement Rd	
Suburb: Kaiwaka	
Town/City: Auckland	Postcode:

THE OWNER(S)	
Name(s): Gina Utting	
Mailing address: 752 Settlement Rd	
Suburb: Kaiwaka	PO Box/Private Bag:
Town/City: Auckland	Postcode:
Phone number:	Email address: ginautting@gmail.com

KDC - Approved Building Consent Document - 210608 - Minor Variation for cladding change to Axon Board on Cavity - Pg 4 of 58 - 4/04/2022 - aaron.brown

BASIS FOR PROVIDING THIS MEMORANDUM

I am providing this memorandum in my role as the: Please tick the option that applies ✓

- ☑ **sole** designer of all of the RBW design outlined in this memorandum – I carried out all of the RBW design work myself – no other person will be providing any additional memoranda for the project
- ☐ **lead** designer who carried out some of the RBW design myself but also supervised other designers – this memorandum covers their RBW design work as well as mine, and **no other** person will be providing any additional memoranda for the project
- ☐ **lead** designer for all but specific elements of RBW – this memorandum only covers the RBW design work that I carried out or supervised and the **other** designers will provide their own memorandum relating to their specific RBW design
- ☐ **specialist** designer who carried out specific elements of RBW design work as outlined in this memorandum – other designers will be providing a memorandum covering the remaining RBW design work

IDENTIFICATION OF DESIGN WORK THAT IS RESTRICTED BUILDING WORK (RBW)

I Russell Swain carried out / supervised the following design work that is restricted building work

PRIMARY STRUCTURE: B1

Design work that is RBW	Description of RBW	Carried out or supervised	Reference to plans and specifications
Tick ✓ if included. Cross ☒ if excluded	If appropriate, provide details of the RBW	Tick ✓ whether you carried out this design work or supervised someone else carrying out this design work	If appropriate, specify references
All RBW design work relating to B1 ☒		☐ Carried out ☐ Supervised	
Foundations and subfloor framing ☒		☐ Carried out ☐ Supervised	

KDC - Approved Building Consent Document - 210608 - Minor Variation for cladding change to Axon Board on Cavity - Pg 5 of 58 - 4/04/2022 - aaron.brown

Design work that is RBW	Description of RBW	Carried out or supervised	Reference to plans and specifications
Tick ✓ if included. Cross ✗ if excluded	If appropriate, provide details of the RBW	Tick ✓ whether you carried out this design work or supervised someone else carrying out this design work	If appropriate, specify references
Walls ✗		◯ Carried out ◯ Supervised	
Roof ✗		◯ Carried out ◯ Supervised	
Columns and beams ✗		◯ Carried out ◯ Supervised	
Bracing ✗		◯ Carried out ◯ Supervised	
Other ✗		◯ Carried out ◯ Supervised	

KDC - Approved Building Consent Document - 210608 - Minor Variation for cladding change to Axon Board on Cavity - Pg 6 of 58 - 4/04/2022 - aaron.brown

Design work that is RBW	Description of RBW	Carried out or supervised	Reference to plans and specifications
Tick ✓ if included. Cross ✗ if excluded	If appropriate, provide details of the RBW	Tick ✓ whether you carried out this design work or supervised someone else carrying out this design work	If appropriate, specify references
EXTERNAL MOISTURE MANAGEMENT SYSTEMS: E2			
All RBW design work relating to E2 ✓	Cladding changed from plywood to Hardies Axon Board on cavity.	◉ Carried out ○ Supervised	Shts 2-4, 6 &8
Damp proofing ✗		○ Carried out ○ Supervised	
Roof cladding or roof cladding system ✗		○ Carried out ○ Supervised	
Ventilation system (for example, subfloor or cavity) ✓	Cavity system to cavity.	◉ Carried out ○ Supervised	
Wall cladding or wall cladding system ✗		○ Carried out ○ Supervised	
Waterproofing ✗		○ Carried out ○ Supervised	
Other ✗		○ Carried out ○ Supervised	

KDC - Approved Building Consent Document - 210608 - Minor Variation for cladding change to Axon Board on Cavity - Pg 7 of 58 - 4/04/2022 - aaron.brown

Design work that is RBW	Description of RBW	Carried out or supervised	Reference to plans and specifications
Tick ✓ if included. Cross ✗ if excluded	If appropriate, provide details of the RBW	Tick ✓ whether you carried out this design work or supervised someone else carrying out this design work	If appropriate, specify references
FIRE SAFETY SYSTEMS: C1 - C6			
Emergency warning systems Evacuation and fire service operation systems ☒ Suppression or control systems Other		○ Carried out ○ Supervised	

Note: The design of fire safety systems is only restricted building work when it involves small-to-medium apartment buildings as defined by the Building (Definition of Restricted Building Work) Order 2011.

WAIVERS AND MODIFICATIONS

Waivers or modifications of the Building Code are required. ○ Yes ◉ No

If Yes, provide details of the waivers or modifications below:

Clause	Waiver/modification required
List relevant clause numbers of building code	Specify nature of waiver or modification of building code required

KDC - Approved Building Consent Document - 210608 - Minor Variation for cladding change to Axon Board on Cavity - Pg 8 of 58 - 4/04/2022 - aaron.brown

ISSUED BY

Name and contact details of the licensed building practitioner who is licensed to carry out or supervise design work that is restricted building work.

Name: Russell Swain	LBP or Registration number: BP113899
The practitioner is a: (●) Design LBP ( ) Registered architect ( ) Chartered professional engineer	
Design Entity or Company (optional):	
Mailing address (if different from below):	
Street address/Registered office: 62 Waimarie St	
Suburb: St Heliers	Town/City: Auckl;and
PO Box/Private Bag:	Postcode:
Phone number:	Mobile: 0212519309
After hours:	Fax:
Email address: russellswain@habitatdesign.co.nz	Website:

DECLARATION

I Russell Swain LBP, state that I have applied the skill and care reasonably required of a competent design professional in carrying out or supervising the Restricted Building Work (RBW) described in this form, and that based on this, I also state that the RBW:

- Complies with the building code, or
- Complies with the building code subject to any waiver or modification of the building code recorded on this form

Signature: R Swain

Date: 16.3.22

KDC - Approved Building Consent Document - 210608 - Minor Variation for cladding change to Axon Board on Cavity - Pg 9 of 58 - 4/04/2022 - aaron.brown

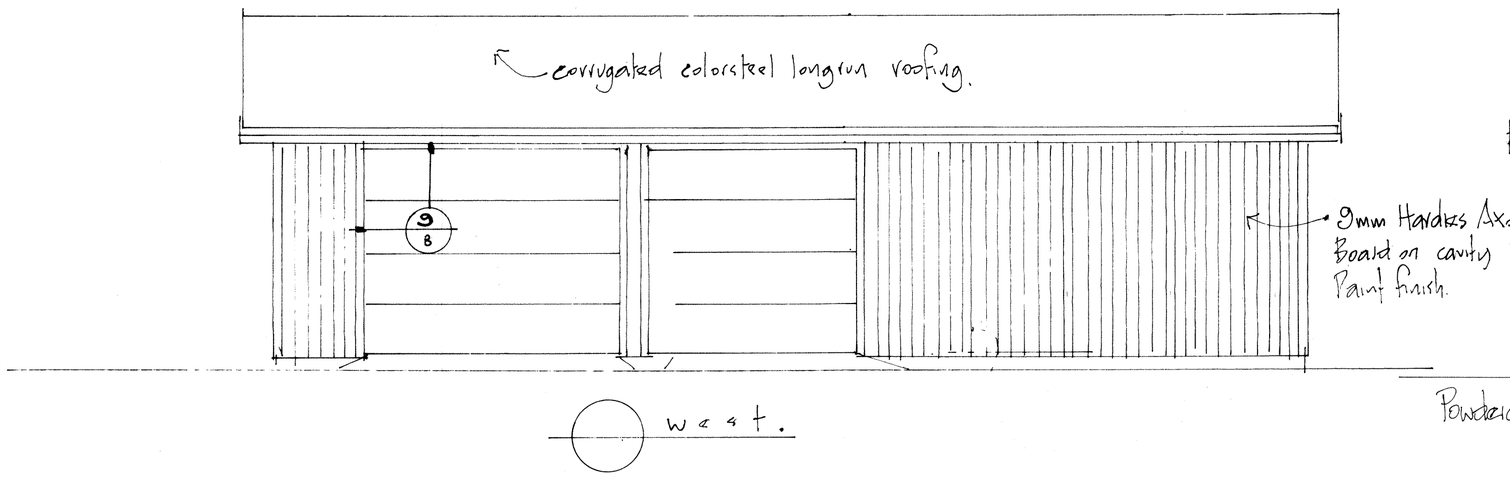

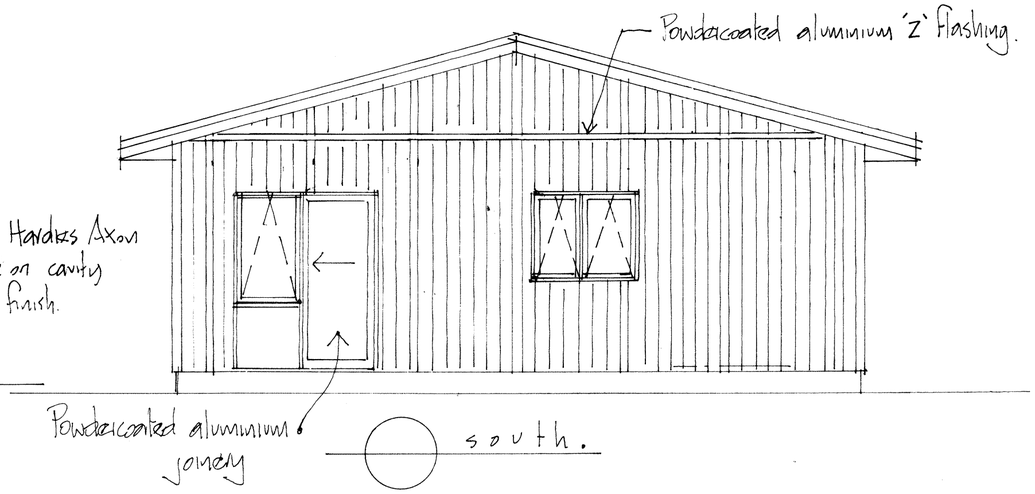

	ALL											
Risk factor	**Low**		**Medium**		**High**		**Very high**		**Subtotals for each risk factor**
Wind zone	0		0		1	1	2		1
Number of storeys	0	0	1		2		4		0
Roof/wall intersection design	0	0	1		3		5		0
Eaves width	0		1		2		5		5
Envelope complexity	0	0	1		3		6		0
Deck design	0	0	2		4		6		0
								Total risk score:	6

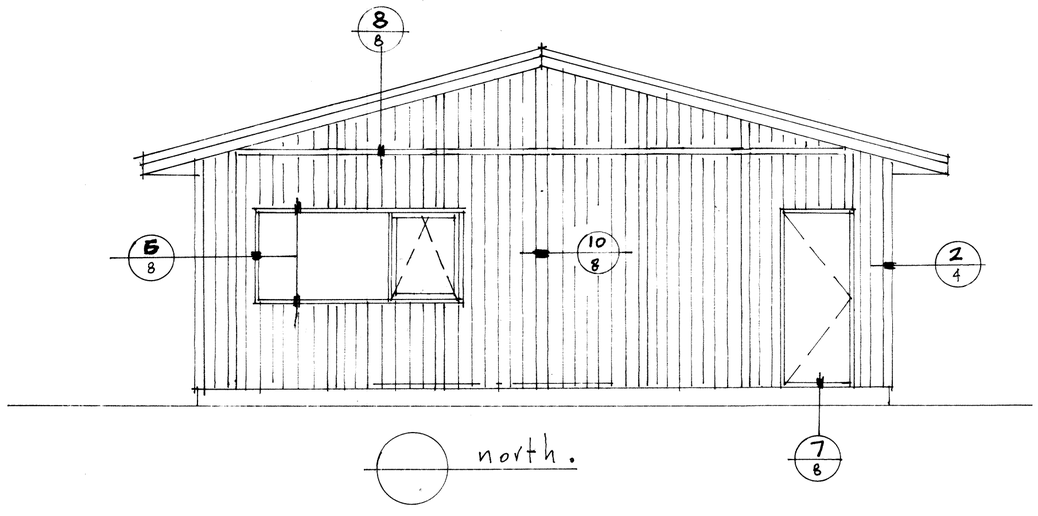

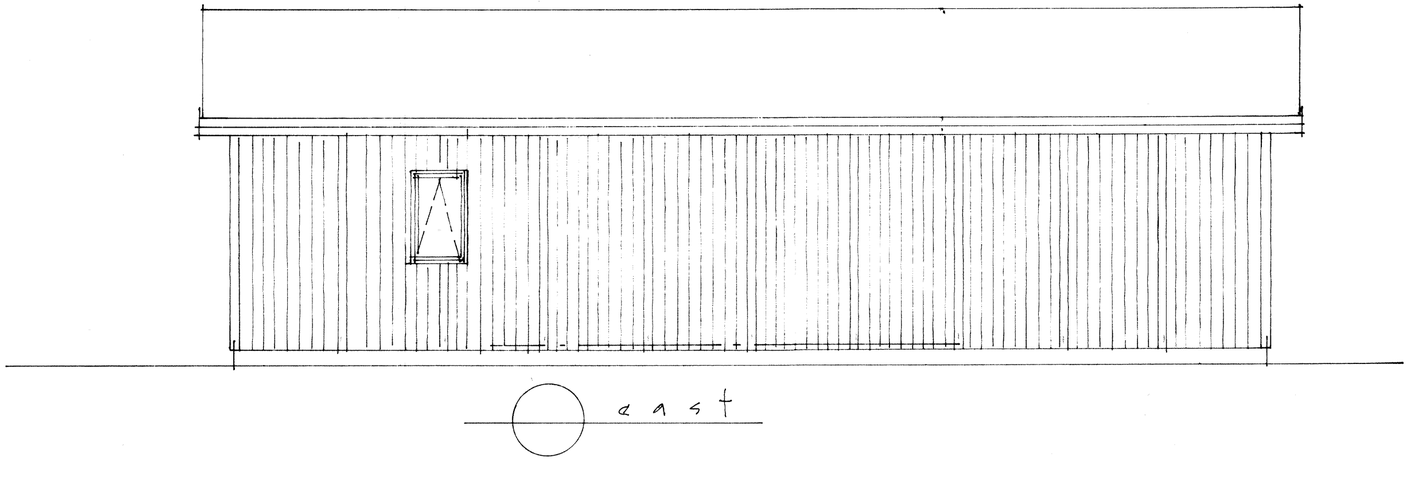

Rev	Date	Issue
B	3/22	as noted.
A	9/21	Bldg Application

Habitat Design Ltd
Architectural Designers
PO Box 25 715
St Heliers, Auckland
021 2519309
Email: russellswain@habitatdesign.co.nz

Client
GINA UTTING

Project
PROPOSED NEW GARAGE/SLEEPOUT

752 SETTLEMENT ROAD
KAIWAKA
AUCKLAND

Drwg
ELEVATIONS

Scale	Sheet No
1:50	**2**
Date: SEPT'21	Issue: B

KDC - Approved Building Consent Document - 210608 - Minor Variation for cladding change to Axon Board on Cavity - Pg 10 of 58 - 4/04/2022 - aaron.brown

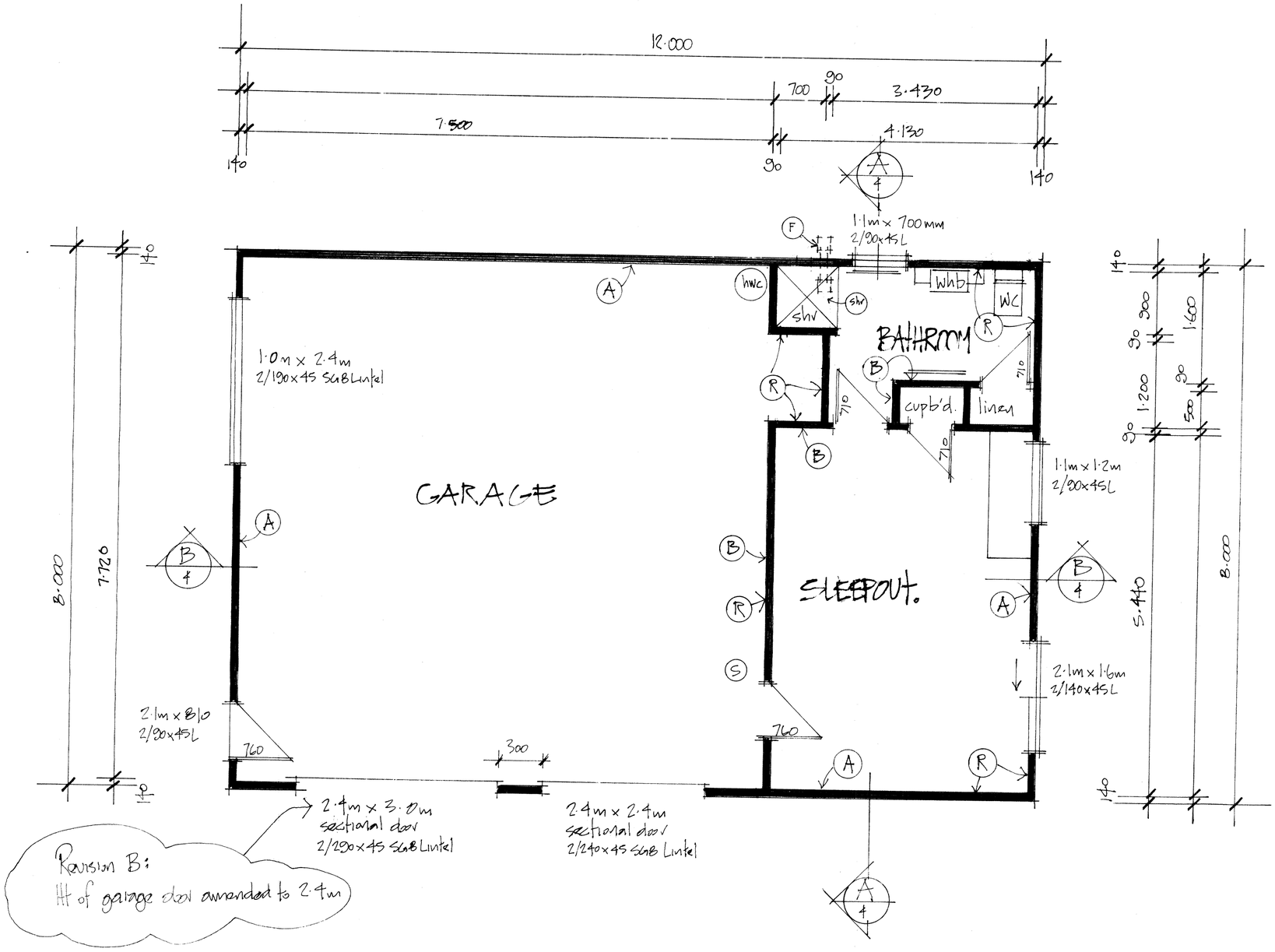

LEGEND

- (A) External - 90x45 SG8 studs at 400mm c/c.
- (B) Internal - 90x45 SG8 studs at 600mm c/c.
- (S) Ensure ceiling mounted smoke alarm – to be 3m maximum from sleep out door.
- (F) Extract fan ducted to soffit.
- (Shw) Proprietary shower (acrylic walls and tray).
- (R) Note: Sleepout/Bathroom to insulated complying with NZS 4218 Schedule Method.
  Walls – R2.2 fibreglass batt.
  Ceiling – R3.2 fibreglass batt.

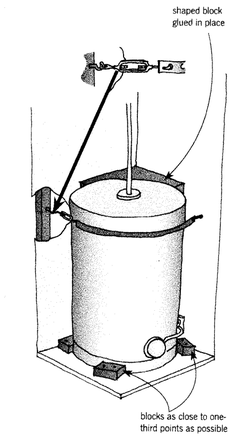

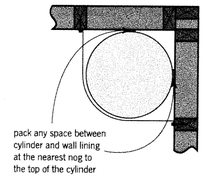

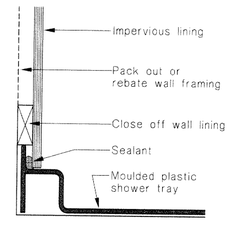

(b) Moulded plastic shower tray

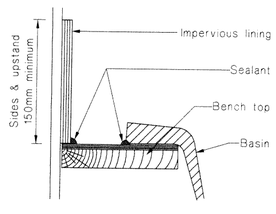

(b) Tub, sink and basin

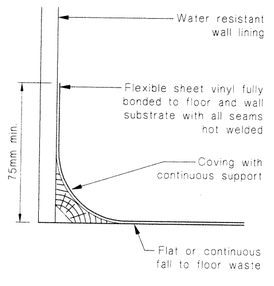

(a) Vinyl floor covering

A	9/21	Bldg Application
Rev	Date	Issue

Habitat Design Ltd
Architectural Designers
PO Box 25 715
St Heliers, Auckland
021 2519309
Email: russellswain@habitatdesign.co.nz

Client
GINA UTTING

Project
PROPOSED NEW GARAGE/SLEEPOUT
752 SETTLEMENT ROAD
KAIWAKA
AUCKLAND

Drwg
FLOOR PLAN

Scale	Sheet No
1:50	3
Date SEPT'21	Issue B

KDC - Approved Building Consent Document - 210608 - Minor Variation for cladding change to Axon Board on Cavity - Pg 11 of 58 - 4/04/2022 - aaron.brown

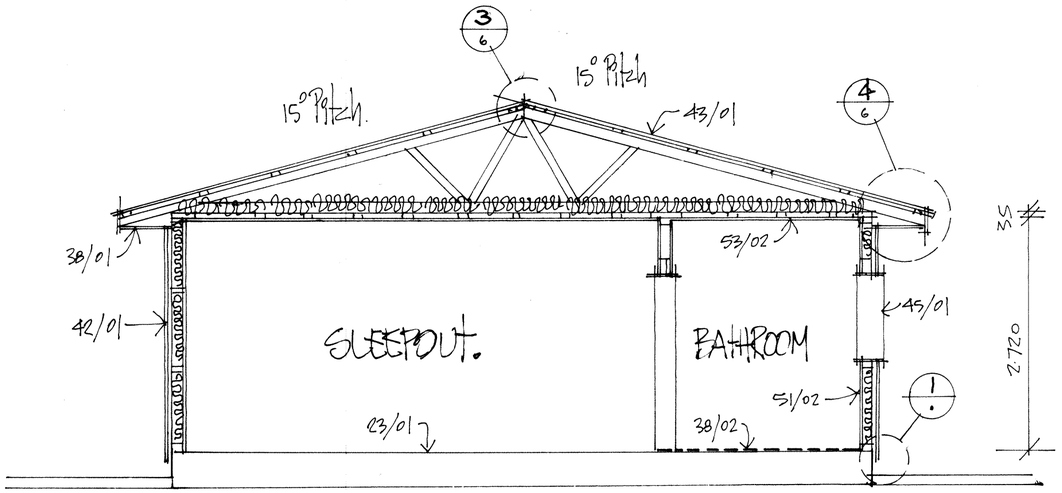

SECTION A

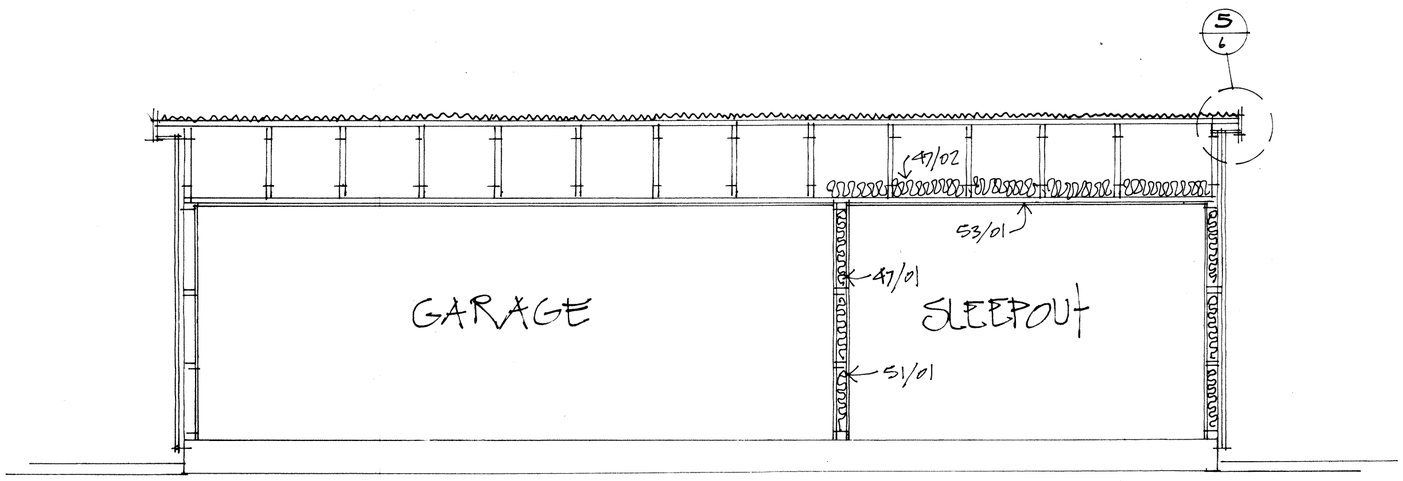

SECTION B

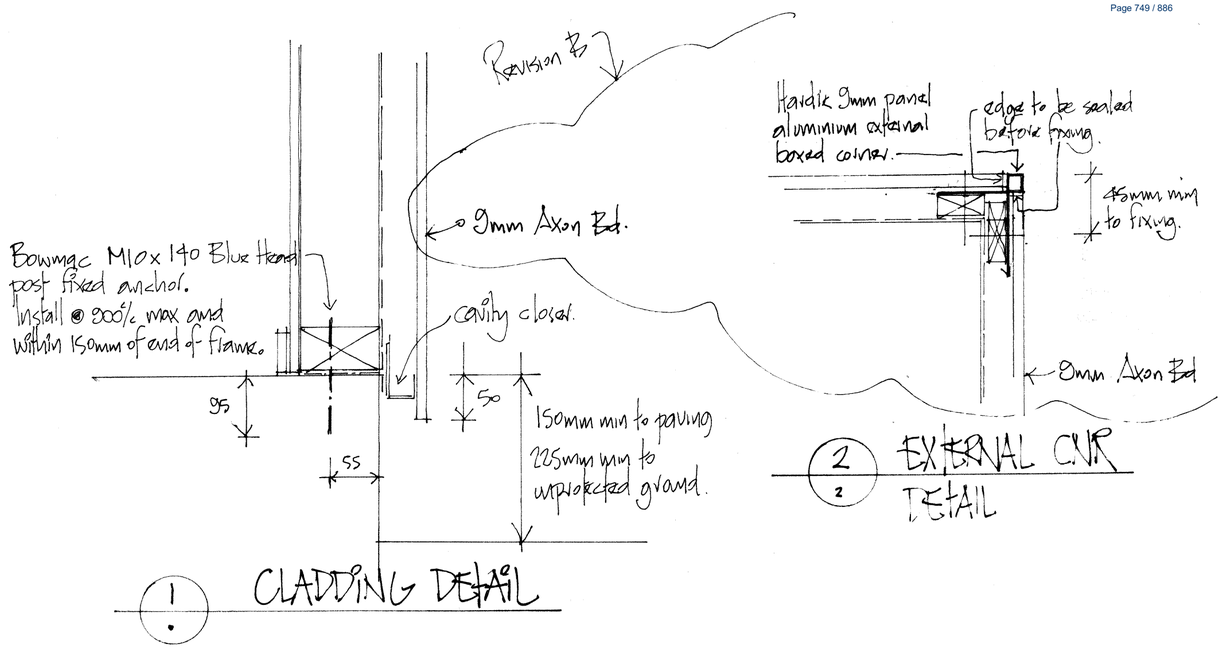

LEGEND	
(00) General	
	PAINTING/STAINING: Owner to confirm finish/colour to all exposed surfaces/linings.
(23) Foundation	
23/01	WAFFLE SLAB: 100mm concrete topping screed (SE72 mesh) on 220mm polystyrene pods on DPC on 50mm minimum sand blinding. Refer Foundation Plan/sht 5.
(38) Timber	
38/01	6mm Hardiflex soffit lining, paint finish.
38/02	Vinyl floor finish to bathroom.
(42) External Walls	
42/01	9mm Hardies Axon Board cladding on ex50mm x 25mm H3.1tan vertical battens at 600mm c/c maximum on Thermakraft Watergate Plus building wrap.
(43) Roof	
43/01	Corrugated Coloursteel longrun roofing on Thermakraft 215 roof underlay on 70x45mm H1.2 SG8 purlins at 900mm c/c maximum (fixing 1/10g self drilling screw x 80mm long) on rafters/trusses at 900mm c/c.
(45) Windows and Doors	
45/01	New powder coated double glazed aluminum joinery. Manufacturer Vantage Aluminium.
(47) Insulation	
47/01	R2.2 90mm fibreglass batts to wall cavity.
47/02	R3.2 180mm fibreglass insulation flat ceilings.
(51) Partitions and Linings	
51/01	10mm Standard GIB BD wall lining.
51/02	13mm Aqualine to wet areas. Nb: refer sheet 7for wall bracing plan.
(53) Ceilings	
53/01	13mm standard GIB BOARD ceiling lining on 70x35mm timber battens at 600mm c/c maximum.
53/02	13mm Aqualine GIB BOARD ceiling lining on 70x35mm timber battens at 600mm c/c maximum.

Rev	Date	Issue
B	3/22	As noted.
A	9/21	Bldg Application

Habitat Design Ltd
Architectural Designers
PO Box 25 715
St Heliers, Auckland
021 2519309
Email: russellswain@habitatdesign.co.nz

Client: GINA UTTING

Project: PROPOSED NEW GARAGE/SLEEPOUT
752 SETTLEMENT ROAD
KAIWAKA
AUCKLAND

Drwg: SECTIONS A & B

Scale: 1:50

Sheet No: 4

Date: SEPT'21

Issue: B

KDC - Approved Building Consent Document - 210608 - Minor Variation for cladding change to Axon Board on Cavity - Pg 12 of 58 - 4/04/2022 - aaron.brown

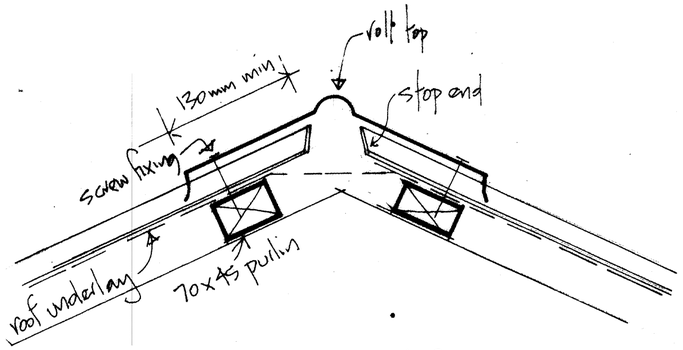

RIDGE DETAIL 3/4

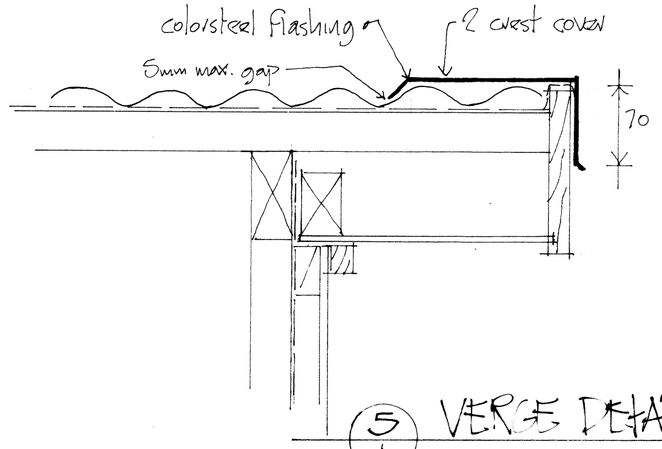

5/4 VERGE DETAIL

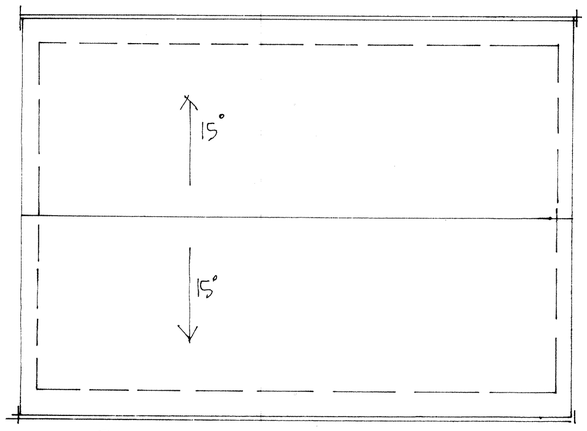

ROOF PLAN

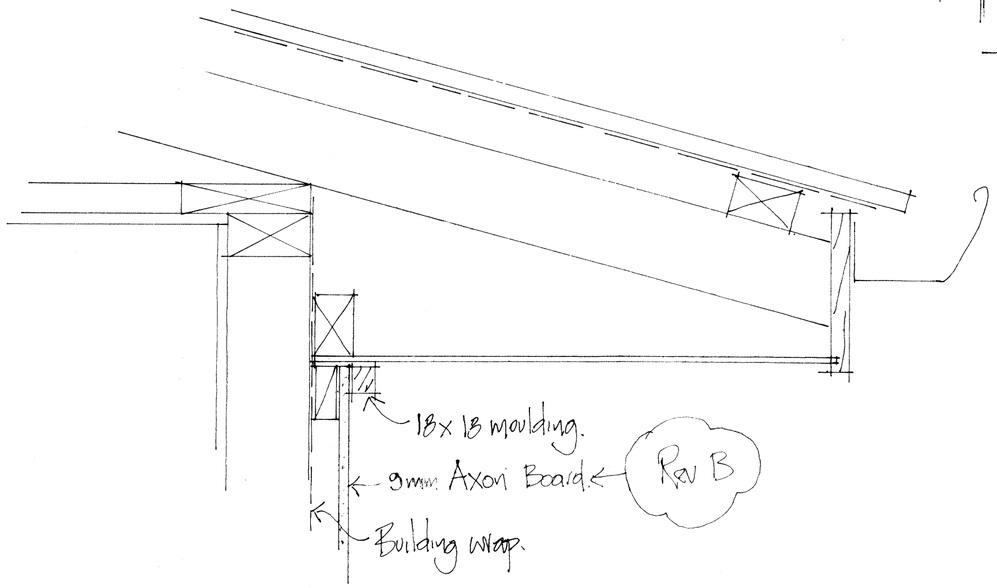

EAVE DETAIL 4/4

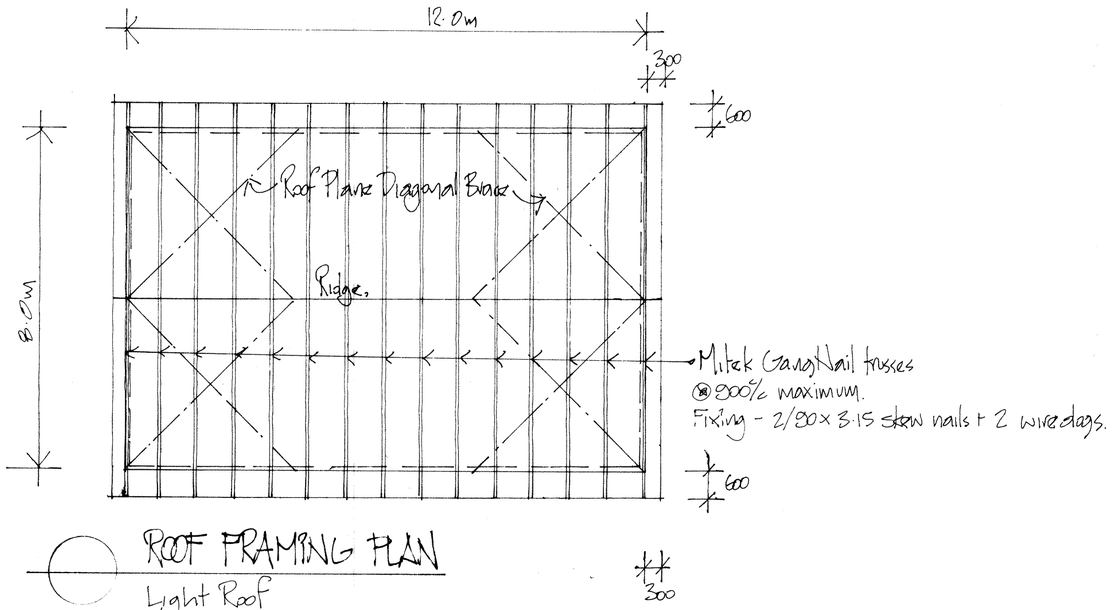

ROOF FRAMING PLAN

Light Roof
15° Pitch
High Wind Zone.

B	3/22	as noted.
A	9/21	Bldg Application
Rev	Date	Issue

Habitat Design Ltd
Architectural Designers
PO Box 25 715
St Heliers, Auckland
021 2519309
Email: russellswain@habitatdesign.co.nz

Client
GINA UTTING

Project
PROPOSED NEW GARAGE/SLEEPOUT
752 SETTLEMENT ROAD
KAIWAKA
AUCKLAND

Drwg
ROOF FRAMING PLAN & DETAILS

Scale	Sheet No
1:50	6
Date: SEPT'21	Issue: B

KDC - Approved Building Consent Document - 210608 - Minor Variation for cladding change to Axon Board on Cavity - Pg 13 of 58 - 4/04/2022 - aaron.brown

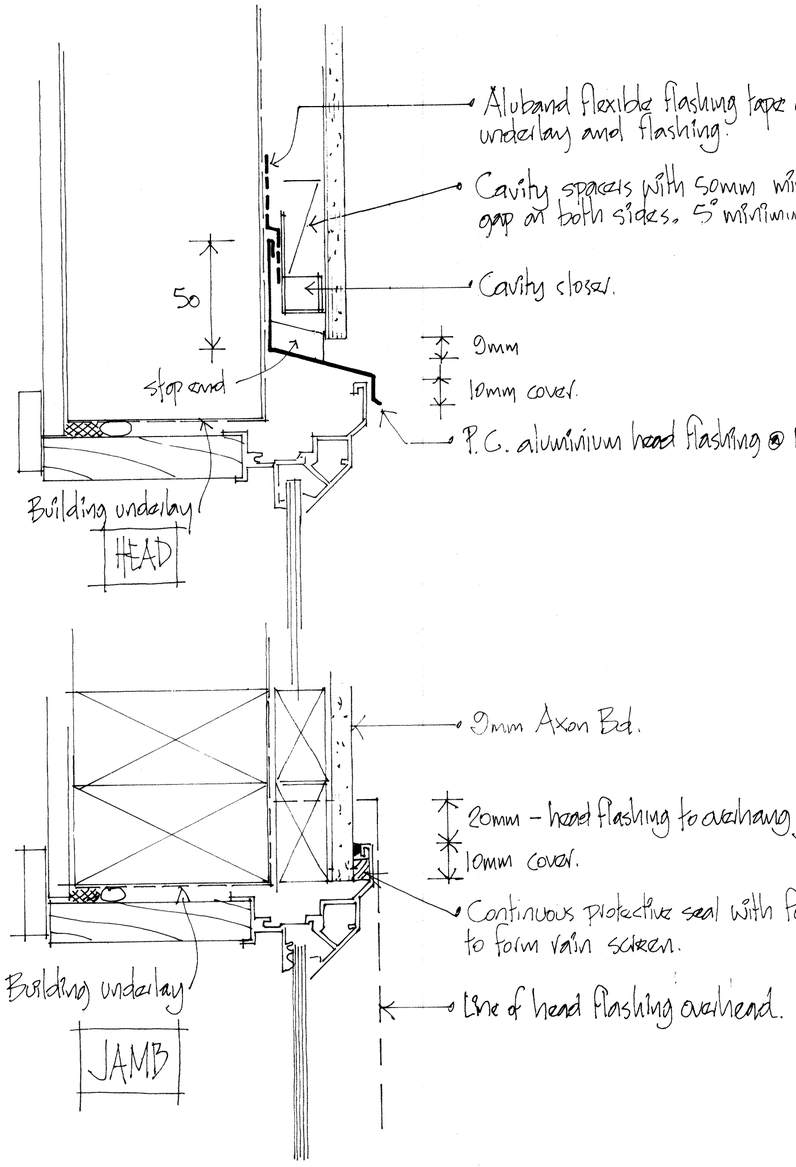

ALUMINIUM JOINERY DETAIL 6/2

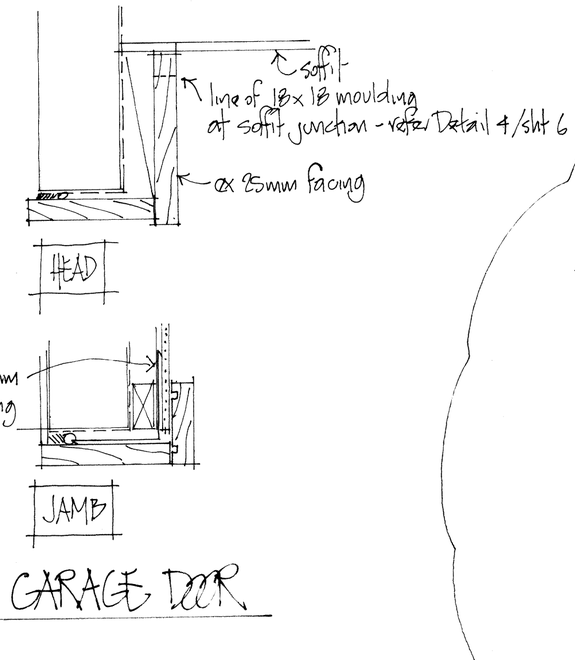

9/2 GARAGE DOOR

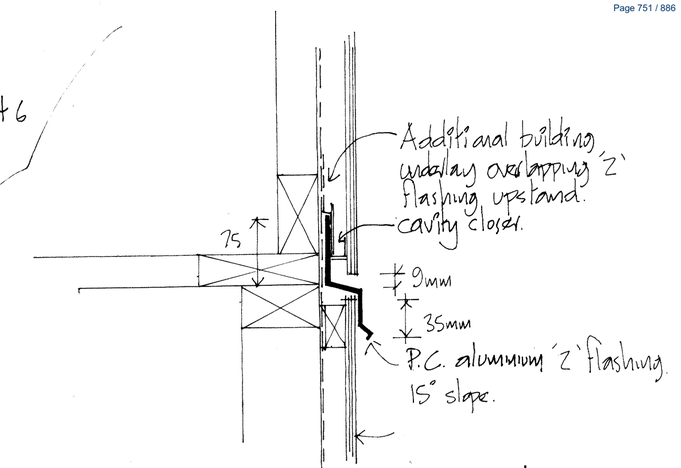

8/2 'Z' FLASHING DETAIL

Revision B

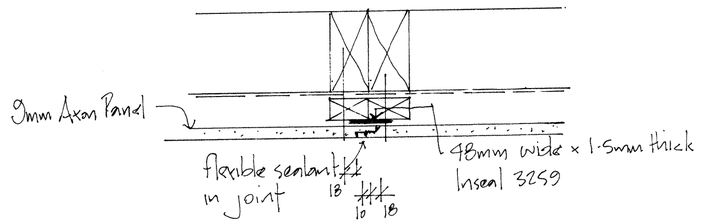

10/2 AXON BOARD VERTICAL JOINT

Note: fixing of sheet to be 18mm in from sheet edge.

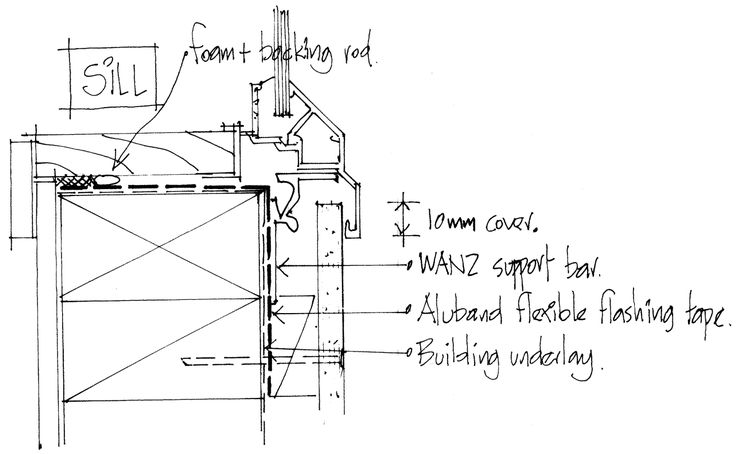

Figure 72B: General window and door opening with drainage cavity

NOTE:
(1) Detailed *cladding* omitted for clarity, refer to specific *claddings*.
(2) Head to be treated similarly with continuous *wall underlay* and *flexible tape* at corners.
(3) Refer individual cladding details for jamb flashings.

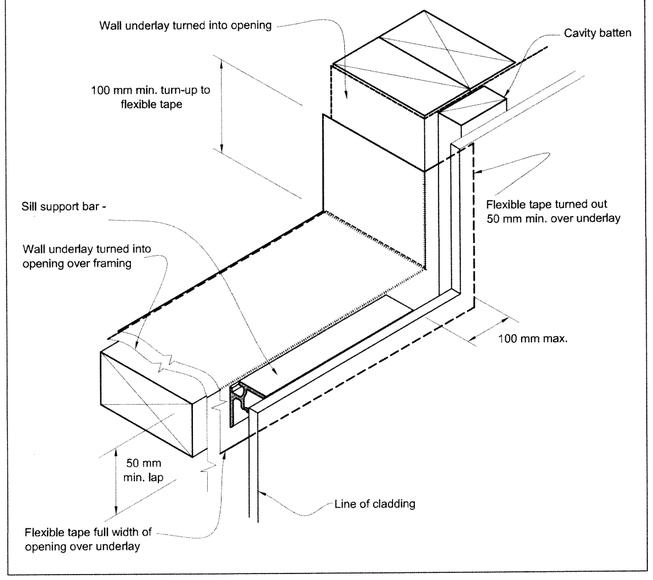

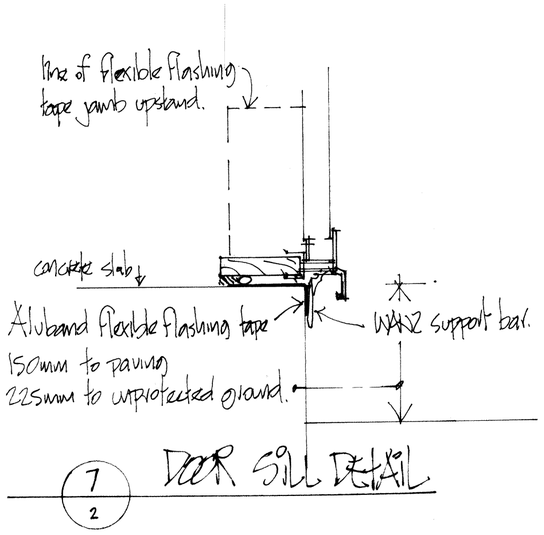

7/2 DOOR SILL DETAIL

Rev	Date	Issue
B	3/22	as noted.
A	9/21	Bldg Application

Habitat Design Ltd
Architectural Designers
PO Box 25 715
St Heliers, Auckland
021 2519309
Email: russellswain@habitatdesign.co.nz

Client	GINA UTTING
Project	PROPOSED NEW GARAGE/SLEEPOUT 752 SETTLEMENT ROAD KAIWAKA AUCKLAND
Drwg	DETAILS
Scale 1:5	Sheet No **8**
Date SEPT'21	Issue B

JamesHardie™

jameshardie.co.nz

Axon™ Panel
EasyLap™ Panel

Timber Cavity Batten

Technical Specification

February 2022 New Zealand



KDC - Approved Building Consent Document - 210608 - Minor Variation for cladding change to Axon Board on Cavity - Pg 14 of 58 - 4/04/2022 - aaron brown

KDC - Approved Building Consent Document - 210608 - Minor Variation for cladding change to Axon Board on Cavity - Pg 15 of 58 - 4/04/2022 - aaron brown



We value your feedback!

To continue with the development of our products and systems, we value your input. Please send any suggestions, including your name, contact details, and relevant sketches to:

Ask James Hardie™
literaturefeedback@jameshardie.co.nz

Make sure your information is up to date

When specifying or installing Hardie™ fibre cement products, ensure that you have the current manual. Additional installation information, warranties and warnings are available at **www.jameshardie.co.nz** or **Ask James Hardie™ on 0800 808 868.**

THIS TECHNICAL SPECIFICATION IS FOR AXON™ PANEL/ EASYLAP™ PANEL FIXED OVER TIMBER CAVITY BATTEN.

KDC - Approved Building Consent Document - 210608 - Minor Variation for cladding change to Axon Board on Cavity - Pg 16 of 58 - 4/04/2022 - aaron.brown

Contents

1 Application and Scope 4

1.1 Application 4
1.2 Scope 4
1.3 Details 5
1.4 Specific Design 5

2 Design 5

2.1 Compliance 5
2.2 Responsibility 5
2.3 Site and Foundation 5
2.4 Surface Clearances 6
2.5 Moisture Management 6
2.6 Structure 6
2.6.1 Timber Framing 6
2.6.2 Wind Loading 6
2.7 Bracing 6
2.8 Fire Rated Walls 6
2.9 Energy Efficiency 7

3 Framing 7

3.1 General 7
3.2 Timber Framing 7
3.2.1 Dimensions 7
3.2.2 Structural Grade 7
3.2.3 Durability 8
3.2.4 Frame Construction 8
3.3 Steel Framing 8
3.3.1 Dimensions and Gauge 8
3.3.2 Durability 8
3.3.3 Frame Construction 8
3.4. Cavity Construction Method 8
3.5 Special Framing Requirements 8
3.6 Tolerances 8

4 Preparation 9

4.1 Flexible Underlay or HomeRAB™ Pre-Cladding 9
4.2 RAB™ Board or Rigid Air Barrier 9
4.3 Vent Strip 9
4.4 Cavity Battens 9
4.5 Intermediate Support 9
4.6 Flashings 10

5 Panel Fixing 10

5.1 General 10
5.2 Fastener Durability 10
5.3 Fastener – Size and Layout 11
5.4 Panel Layout 11

6 Jointing 11

6.1 General 11
6.2 Vertical Joint 11
6.3 Horizontal Joint 12
6.4 External Corner 12
6.5 Internal Corner 12
6.6 Flashing Material Durability 12

7 Finishing 12

7.1 Preparation 12
7.2 Sealants 12
7.3 Coating 13
7.4 Staining 13

8 Care and Maintenance 13

9 Product information 14

9.1 Manufacturing and Classification 14
9.2 Product Mass 14
9.3 Durability 14
9.3.1 Resistance to Moisture/Rotting 14
9.3.2 Control of External Fire Spread 14
9.3.3 Alpine Regions 14

10 Safe Working Practices 15

10.1 Storage and delivery 17
10.2 Tips for safe and easy handling of Axon and EasyLap Panels 17

11 Accessories 18

12 Details 21

Product Warranty 43

KDC - Approved Building Consent Document - 210608 - Minor Variation for cladding change to Axon Board on Cavity - Pg 17 of 58 - 4/04/2022 - aaron.brown

1 Application and Scope

1.1 Application

Axon™ Panel/EasyLap™ Panel is manufactured by James Hardie using advanced proprietary lightweight cement composition of treated cellulose fibre, portland cement, finely ground sand and water. It is classified as light weight wall cladding suitable for residential and light commercial buildings using timber framed buildings.

- Axon Panel/EasyLap Panel is primed on the face to take a suitable paint finish in any colour.
- Axon Panel 133 Smooth - the grooves on the face panel are nominal 10mm wide x 2.25mm deep and spaced at 133mm centres.
- Axon Panel 133 Grained - the grooves on the face panel are nominal 10mm wide x 2.25mm deep and spaced at 133mm centres. Between the grooves is a look of traditional wood-grain texture.
- Axon Panel 400 Smooth - the grooves on the face panel are nominal 10mm wide x 2.25mm deep and spaced at 400mm centres.
- EasyLap Panel provides a durable, shiplap vertical joint panel appearance for residential/commercial building façades. The panel is finished with a site applied roll on textured acrylic paint to create a rendered look with subtle vertical joint.

Specifier

If you are a specifier or other responsible party for a project ensure that the information in this document is appropriate for the application you are planning and that you undertake specific design and detailing for areas which fall outside the scope of these specifications.

Installer

If you are an installer ensure that you follow the design, moisture management principles, and associated details and material selection provided by the designer. All details provided in this document must be read in conjunction with this specification.

Make sure your information is up to date

When specifying or installing Hardie™ fibre cement products, ensure you have the current manual. If you're not sure you do, or you need more information, visit www.jameshardie.co.nz or Ask James Hardie on 0800 808 868.

1.2 Scope

The scope of this specification covers the use of Axon Panel/EasyLap Panel fixed with timber cavity battens to buildings which fall within the scope limitations of 'Acceptable Solution E2/AS1 paragraph 1.1' of the New Zealand Building Code (NZBC) or the buildings covered by a specific engineering design (SED).

This document is intended for use by architects, designers and specifiers who may be involved with the specification of Axon Panel/EasyLap Panel.

Note: Refer to Axon Panel/EasyLap Panel CLD™ Structural Cavity Batten technical specification for direct fixed or when fixing to CLD Structural Cavity Battens.

KDC - Approved Building Consent Document - 210608 - Minor Variation for cladding change to Axon Board on Cavity - Pg 18 of 58 - 4/04/2022 - aaron.brown

1.3 Details

Various Axon Panel/EasyLap Panel fixed to timber cavity batten figures are provided at the rear of this document. All dimensions shown are in millimetres unless noted otherwise. This specification and details in CAD file are also available for download at www.jameshardie.co.nz.

1.4 Specific Design

For use of Axon Panel/EasyLap Panel outside the published scope, the architect, designer or engineer must undertake specific design. For advice on designs outside the scope of this specification, Ask James Hardie on 0800 808 868.

2 Design

2.1 Compliance

Axon Panel/EasyLap Panel complies with E2 of the NZBC as an alternate solution.

Axon Panel/EasyLap Panel claddings have been independently tested/assessed and meets the performance requirements of the NZBC. Axon Panel/Easylap Panel installed as per the details and information published in this technical specification are BRANZ Appraised. Refer to BRANZ Appraisal 1211(2022).

2.2 Responsibility

The specifier or other party responsible for the project must run through a risk matrix analysis to determine which construction method is to be used. The designer must also ensure that the figures published in this specification are appropriate for the intended application and that additional detailing is performed for specific design or any areas that fall outside the scope of this specification. The designers should ensure that the intent of their design meets the requirements of NZBC.

All New Zealand Standards referenced in this manual are current edition and must be complied with.

James Hardie conducts stringent quality checks to ensure that any product manufactured falls within our quality spectrum. It is the responsibility of the builder to ensure that the product meets aesthetic requirements before installation. James Hardie will not be responsible for rectifying obvious aesthetic surface variations following installation.

2.3 Site and Foundation

The site on which the building is situated must comply with the NZBC Acceptable Solution E1/AS1 'Surface Water'.

Foundations design must comply with the requirements of NZS 3604 'Timber-framed buildings' or be as per specific engineering design.

The grade of adjacent finished ground must slope away from the building to avoid any possibility of water accumulation in accordance with the NZBC requirements.

KDC - Approved Building Consent Document - 210608 - Minor Variation for cladding change to Axon Board on Cavity - Pg 19 of 58 - 4/04/2022 - aaron.brown

2.4 Surface Clearances

The clearance between the bottom edge of the cladding and paved/unpaved ground must comply with section 9.1.3 of E2/AS1. The finished floor level must also comply with these requirements. These clearances must be maintained throughout the life of the building .

Axon Panel/EasyLap Panel must overhang the bottom plate on a concrete slab by a minimum of 50mm, as required by NZS 3604.

Axon Panel/EasyLap Panel must have a minimum clearance of 100mm paved ground, and 175mm from unpaved ground.

On roofs and decks, the minimum clearance must be 50mm.

Do not install external cladding such that it may remain in contact with water or ground.

2.5 Moisture Management

It is the responsibility of the specifier to identify moisture related risks associated with any particular building design.

Wall construction design must effectively manage moisture, considering both the interior and exterior environments of the building, particularly in buildings that have a higher risk of wind driven rain penetration or that are artificially heated or cooled.

Walls must include those provisions as required by the NZBC Acceptable Solution E2/AS1 'External Moisture'. In addition all wall openings, penetrations, junctions, connections, window sills, heads and jambs must incorporate appropriate flashings for waterproofing. The other materials, components and installation methods used to manage moisture in external walls, must comply with the requirements of relevant standards, manufactures specifications and the NZBC.

2.6 Structure

2.6.1 Timber Framing

Timber framed buildings must be designed in accordance with the NZS 3604 (Timber-framed buildings). When the framing is provided as per the specific engineering design, the framing stiffness must be equivalent to, or more than, the stiffness requirements of the NZS 3604.

For timber frame walls longer than 12m, it is best practice to allow for construction joints to accommodate movements generated due to timber shrinkage or deflections etc.

2.6.2 Wind Loading

Axon Panel/EasyLap Panel is suitable for use in all wind zones in New Zealand up to and including EH as defined in the NZS 3604.

A specific design is required for all situations where the buildings fall in a specific engineering design (SED) wind zone.

2.7 Bracing

Axon Panel installed to timber cavity batten cannot be used to achieve structural bracing. However bracing can be achieved by useing HomeRAB™ Pre-Cladding or RAB™ Board installed direct to framing instead of a flexible underlay or by using Villaboard Lining bracing system on the internal face. Refer to the Bracing Design Manual by James Hardie for further information.

2.8 Fire Rated Walls

Axon Panel/EasyLap Panel when fixed to timber cavity battens to external walls can achieve fire ratings up to 60/60/60 to comply with C/AS1 of the NZBC, when the walls are constructed in accordance with the current Fire and Acoustic Design Manual by James Hardie.

Axon Panel/EasyLap Panel are suitable for use where 'non-combustible' materials are required on walls close to a boundary.

KDC - Approved Building Consent Document - 210608 - Minor Variation for cladding change to Axon Board on Cavity - Pg 20 of 58 - 4/04/2022 - aaron.brown

2.9 Energy Efficiency

External walls constructed as per this technical specification, using Axon Panel/EasyLap Panel cladding must use suitable bulk insulation to meet the minimum thermal insulation requirements as per Clause H1/AS1 'Energy Efficiency' of the NZBC.

3 Framing

3.1 General

Axon Panels/EasyLap Panels can be installed to timber-framed or steel-framed structures. Fixing to any other framing material is subject to a specific engineering design.

- Stud spacing must not exceed 600mm centres.
- Nog/dwang spacing must not exceed 800mm centres when studs are at 600mm centres.

3.2 Timber Framing

3.2.1 Dimensions

A minimum 70mm wide stud is required at panel edges for cavity construction using Hardie™ Flex nails.

3.2.2 Structural Grade

Timber framing structural grade to be in accordance with NZS 3604.

3.2.3 Durability

The external framing must be treated to a minimum H1.2 treatment. Refer to NZBC Acceptable Solution B2/AS1 'Durability' for further information about the durability requirements.

For timber treatment and allowable moisture content information refer to NZS 3602 (Timber and Wood-Based Products for use in Buildings) and NZS 3640 (Chemical Preservation of Round Sawn Timber) for minimum timber treatment selection and treatment requirements.

Also refer to framing manufacturer's literature for further guidance on timber selection. Framing must be protected from moisture at site in accordance with the recommendation of framing manufacturer's.

Note: Refer to NZS 3602 for the allowable moisture contents in timber.

3.2.4 Frame Construction

The framing must fully support all panel edges. The framing must be rigid and not rely on the cladding panel for stability.

All timber framing sizes and set-out must comply with the NZS 3604 and as specified in this specification.

In case of gable end trusses sitting on top plates of the external wall frame, the frame size must be in accordance with truss design and specification supplied by the frame and truss manufacturer/supplier supported by independent design producer statement.

KDC - Approved Building Consent Document - 210608 - Minor Variation for cladding change to Axon Board on Cavity - Pg 21 of 58 - 4/04/2022 - aaron.brown

3.3 Steel Framing

3.3.1 Dimensions and Gauge

A 38mm minimum stud width is required. Framing members must be 0.55mm minimum to 1.6mm maximum BMT (Base Metal Thickness).

3.3.2 Durability

The steel framing must have the appropriate level of coating to prevent corrosion and to comply with the durability requirements of NZBC.

3.3.3 Frame Construction

Steel framing must comply with NASH handbook/guidelines. Stud and batten spacing must not be more than what has been specified in this specification. Refer to framing manufacturer's specifications or NASH for further guidance on steel frame installation.

3.4 Cavity Construction Method

For cavity construction method the following framing is required:

- When studs are spaced at 600mm centres maximum, the nogs/dwangs must be provided at 800mm centres maximum.
- A minimum 70mm wide stud is required at vertical panel joint.
- When studs are spaced at 400mm centres then the nogs/dwangs may be provided at 1200mm centres.

3.5 Special Framing Requirements

The following are special framing requirements for both timber and steel framing:

- Double studs are required at internal corners, refer to Figure 8.
- Double studs are required at each shiplap vertical joint. Refer to Figures 6 and 7.

3.6 Tolerances

In order to achieve an acceptable wall finish, it is imperative that framing is straight and true.

Framing tolerances must comply with the requirements of the NZS 3604. All framing shall be made flush.

KDC - Approved Building Consent Document - 210608 - Minor Variation for cladding change to Axon Board on Cavity - Pg 22 of 58 - 4/04/2022 - aaron.brown

4 Preparation

4.1 Flexible Underlay or HomeRAB™ Pre-Cladding

Flexible underlay must be provided as per the requirements of the NZBC Acceptable Solution E2/AS1 'External Moisture' Table 23. The flexible underlay must be fixed in accordance with E2/AS1 and the underlay manufacturer's recommendations. Walls which are not lined on the inside face (e.g. garage walls or gable ends) must include a rigid sheathing or an air barrier behind the cladding which complies with the requirements of the NZBC Acceptable Solution E2/AS1 Table 23. HomeRAB™ Pre-Cladding is suitable for use in these applications. It must be installed in accordance with HomeRAB™ Pre-Cladding and RAB™ Board installation manual.

4.2 RAB™ Board or Rigid Air Barrier

For specific design projects where the wind pressure is higher than 1.5kPa, or when an EH windzone, RAB™ Board must be used instead of flexible underlay. RAB™ Board is suitable to withstand wind pressures up to 4.5kPa.

To achieve the temporary weathertightness using HomeRAB™ Pre-Cladding or RAB™ Board, windows/doors can be temporarily installed. Refer to HomeRAB™ Pre-Cladding and RAB™ Board installation manual for information regarding its installation.

4.3 Vent Strip

The Hardie™ uPVC cavity vent strip must be installed at the bottom of all walls constructed using the drained and ventilated cavity construction method. It is important that the openings in the vent strip are kept clear and unobstructed to allow free drainage and ventilation of cavities. Hardie™ uPVC vent strip has an opening area of 1000mm^2/m length.

4.4 Cavity Battens

Buildings with a risk score of 7-20 calculated in accordance with Table 3 of Acceptable Solution E2/AS1 of the NZBC, require Axon Panel/EasyLap Panel to be installed on a cavity. The battens provide airspace between the frame and the panel and are considered a "packer" only in this specification.

The timber cavity battens must be minimum H3.1 treated in accordance with NZS 3640 (Chemical preservation of rough and sawn timber) to comply with the durability requirements of B2/AS1.

Cavity battens must comply with E2/AS1 and:

- Be minimum 18mm thick
- Be as wide as the width of studs
- Be provided at 300mm centres where studs are fixed at 600mm centres.
- Be fixed by the cladding fixings to the main framing over the flexible underlay. Therefore until claddings are fixed the battens only need to be fixed to framing by 40 x 2.8mm nails at 800mm centres.

4.5 Intermediate Support

Where studs are at 600mm centres an intermediate means of restraining the building underlay and insulation from bulging into the cavity shall be installed. An acceptable method to achieve this is using one of the following options:

- Intermediate cavity batten between the studs; or
- 75mm galvanized mesh; or
- Polypropylene tape at 300mm centres fixed horizontally and drawn taut

KDC - Approved Building Consent Document - 210608 - Minor Variation for cladding change to Axon Board on Cavity - Pg 23 of 58 - 4/04/2022 - aaron.brown

No intermediate supports/battens are required:

- When studs are spaced at 400mm centres; or
- When rigid air barriers instead of building underlays are used.

4.6 Flashings

All wall openings, penetrations, intersections, connections, window sills, heads and jambs must be flashed prior to panel installation. Please refer to moisture management requirements in Clause 2.5.

The flexible underlays must be appropriately incorporated with penetration and junction flashings. Materials must be lapped in such a way that water tracks down to the exterior on the face of flexible underlay.

The selected flashing materials must comply with the durability requirements of the NZBC. For information refer to Table 20 of E2/AS1.

5 Panel Fixing

5.1 General

Axon Panel/EasyLap Panel must be kept dry and under cover whilst in storage or prior to/during the installation. Every endeavour must be made to keep framing dry once panel fixing commences. All site cut panel edges must be sealed prior to installation.

The shiplap jointing of panels is only suitable for vertical fixing of panels. Do not fix in the groove of Axon Panel. Minimum sheet width around window/door openings or corners etc. to be 200mm.

This specifications covers the fixing of Axon Panel/EasyLap Panel to timber cavity battens fixed over timber frame. When fixing to a steel frame, Ask James Hardie 0800 808 868.

5.2 Fastener Durability

Fasteners must meet the minimum durability requirements of the NZBC. Refer to Table 2 for fixing materials requirements to be used in relation to the exposure conditions.

Table 2

Exposure conditions and nail selection prescribed by NZS 3604		
Zone	**Application**	
D (sea spray) and geothermal hot spots	General	Stainless steel 304/316
	Fire	
*C and B	General	Hot dip galvanised**
	Fire	

* Zone C areas where local knowledge dictates that increased durability is required, appropriate selection shall be made Microclimatic conditions as detailed in NZS 3604, Paragraph 4.2.4 require SED.
**Hot dip galvanised must comply with AS/NZS 4680.
Also refer to the NZBC Acceptable Solution E2/AS1 Table 20 and 21 for information regarding the selection of suitable fixing materials and their compatibility with other materials.

KDC - Approved Building Consent Document - 210608 - Minor Variation for cladding change to Axon Board on Cavity - Pg 24 of 58 - 4/04/2022 - aaron.brown

5.3 Fastener – Size and Layout

Axon Panel/EasyLap Panel must be fixed to framing using the fixings as specified in Table 3 below and follow the edge distance required for nails as shown in the details. Fixings must be finished flush with the panel surface. Refer to Figures 6 and 7.

Table 3

Panel fixing	
Cavity construction over flexible underlay	
60 x 3.15mm Hardie™ Flex nails.	Fix at 200mm centres to all vertical framing. Stud width 70mm min required at vertical joint.
Cavity construction over HomeRAB™ Pre-Cladding or RAB™ Board	
75 x 3.15mm Hardie™ Flex nails.	Fix at 200mm centres to all vertical framing. Stud width 70mm min required at vertical joint.

For other fixing options Ask James Hardie on 0800 808 868.

Note: Special fixing arrangements are required for bracing and fire-resistance rated wall systems. For more information Ask James Hardie on 0800 808 868.

- When fixing the panels using nail guns, refer to the nail gun manufacturer for information about nails and the type of nail gun to be used.

Note: Do not use 'D' head nails.

5.4 Panel Layout

All panel edges must be supported by the framing. The shiplap joint must be formed vertically. The framing centres must be checked before the panel installation. Refer to Figure 3.

6 Jointing

6.1 General

Axon Panels/EasyLap Panels are fixed to form a shiplap joint at vertical edges. The panels have factory made edges to suit this jointing.

6.2 Vertical Joint

Axon Panels/EasyLap Panels are shiplap jointed keeping a gap of 1-2mm between the panels. A 50mm wide 3259 Inseal sealing tape is used under the joint. A flexible sealant must be applied to the full length of the joint before the panels are jointed. The edge distance for a Hardie™ Flex nail must be 18mm min. Refer to Figures 6 and 7.

KDC - Approved Building Consent Document - 210608 - Minor Variation for cladding change to Axon Board on Cavity - Pg 25 of 58 - 4/04/2022 - aaron.brown

6.3 Horizontal Joint

At floor joist levels a horizontal joint must be provided to accommodate the movement resulting from timber joist shrinkage and settlement. A Hardie™ aluminium horizontal 'h' mould is used to form a horizontal joint. Use the aluminium 'h' mould jointer to cover over the butt joint of flashings. A purpose made metal 'Z' flashing could also be used to flash the horizontal joint. Refer to Figure 16.

6.4 External Corner

An aluminium box corner flashing is used to form the external box corner. The site cut sheet edges are sealed before butting them into the box corner.

On a two storey construction the aluminium box corner is finished under the aluminium 'h' mould. A Hardie™ 9mm aluminium 'h' mould external corner must be used over the corner when in this situation. Refer to Figures 9 and 18.

6.5 Internal Corner

The internal corner is formed using the uPVC corner under flashing or an 80mm wide Inseal sealing strip behind the panel edges. The joint is filled with the flexible sealant. Refer to Figure 8.

6.6 Flashing Material Durability

Please refer to Table 20 of E2/AS1 of the NZBC regarding the durability requirements of various flashing materials.

7 Finishing

7.1 Preparation

Painting of Axon Panel/EasyLap Panel is required to meet the durability requirements of the NZBC and James Hardie product warranties.

Axon Panel/EasyLap Panel must be dry and free from dirt before painting.

For best aesthetic results a low sheen paint is recommended. Dark paints can be used when using the aluminium flashings.

7.2 Sealants

All sealants used must comply with the relevant requirements of the NZBC. The application and usage must be in accordance with manufacturer's instructions. Check with sealant manufacturer prior to coating over sealants. Some sealant manufacturers do not recommend coating over their product.

KDC - Approved Building Consent Document - 210608 - Minor Variation for cladding change to Axon Board on Cavity - Pg 26 of 58 - 4/04/2022 - aaron.brown

7.3 Coating

Axon Panels/EasyLap Panels are supplied pre-primed. Panels must be painted within 90 days of installation. Use only quality exterior paints complying with AS 3730. Manufacturer's specification for the selected paint must be followed. Note that certain special paints require an undercoat before applying the finish coat. Refer to the paint manufacturer for preparation required before commencing the coating work. Axon Panel/EasyLap Panels can be painted with dark colour paints. When using uPVC flashings, the LRV of colour should be 40% or higher.

7.4 Staining

Stains containing linseed oil are specifically designed for wood and may not be suitable for fibre cement cladding products, primed or unprimed. Semi-transparent stains can vary in uniformity of appearance depending on method of application and conditions, requiring a high level of skill and craftsmanship to achieve a uniform appearance. Clear coats have not proven durable in exterior exposure and James Hardie considers them a maintenance item that may require application of a refurbishing sealer at regular intervals. James Hardie does not warrant the appearance and durability of the use of semi-transparent stains and clear coats.

For further information contact the stain manufacturers. Refer to Section 11 for stain manufacturer details.

8 Care and Maintenance

The extent and nature of maintenance will depend on the geographical location and exposure of the building. As a guide, it is recommended that basic normal maintenance tasks shall include but not be limited to:

- Washing down exterior surfaces every 6-12 months using low pressure water and a brush, and every 3-4 months in extreme coastal conditions or sea spray zones. Refer to your paint manufacturer for wash down requirements and do not use a water blaster to wash down the cladding.
- Re-applying of exterior protective finishes if necessary. Always refer to your paint manufacturer for re-coating requirements.
- Maintaining the exterior envelope and connections including joints, penetrations, flashings and sealants that may provide a means of moisture entry beyond the exterior cladding.
- Cleaning out gutters, blocked pipes and overflows as required
- Pruning back vegetation that is close to or touching the building
- The clearance between the bottom edge of Axon Panel/EasyLap Panel and the finished ground must always be maintained.

KDC - Approved Building Consent Document - 210608 - Minor Variation for cladding change to Axon Board on Cavity - Pg 27 of 58 - 4/04/2022 - aaron.brown

9 Product information

9.1 Manufacturing and Classification

Axon Panel/EasyLap Panel is a cellulose fibre reinforced cement building product. The basic composition is portland cement, ground sand, cellulose fibre and water. The panels are easily identified by the name 'Axon Panel' 'EasyLap Panel' respectively printed at regular intervals on the back face of panel.

Axon Panel/EasyLap Panel is manufactured to AS/NZS 2908.2 'Cellulose-Cement Products Part 2: Flat Sheets' (ISO 8336 'Fibre Cement Flat Panels') standards in New Zealand. James Hardie is an ISO 9001 certified manufacturer.

Axon Panel/EasyLap Panel is classified Type A, Category 2 in accordance with AS/NZS 2908.2 "Cellulose-Cement Products".

For Safety Data Sheets (SDS) visit www.jameshardie.co.nz or Ask James Hardie on 0800 808 868.

9.2 Product Mass

Axon Panel/EasyLap Panel is manufactured in 9.0 mm thickness and has a mass of 12.1kg/m^2 at EMC.

Axon Panel/EasyLap Panel cladding is defined as a Light Weight Wall Cladding (not exceeding 30kg/m^2) as per NZS 3604.

9.3 Durability

Axon Panel/EasyLap Panel installed as per this technical specification will meet the durability requirements for claddings as required under clause 'B2-Durability' of the NZBC.

9.3.1 Resistance to Moisture/Rotting

Axon Panel/EasyLap Panel has demonstrated resistance to permanent moisture induced deterioration (rotting) and has passed the following tests in accordance with AS/NZS 2908.2:

- Heat Rain (Clause 6.5).
- Water Permeability (Clause 8.2.2).
- Warm Water (Clause 8.2.4).
- Soak Dry (Clause 8.2.5).

9.3.2 Control of External Fire Spread

Axon Panel/EasyLap Panel is suitable for use in external wall cladding applications where 'Non-Combustible Materials' are specified and complies with the requirements of Section 5.4 of C/AS1 and 5.8.1 (b) of C/AS2 of the NZBC.

Refer to Fire and Acoustic Design Manual by James Hardie for construction details.

9.3.3 Alpine Regions

In regions subject to freeze/thaw conditions, Axon Panel/EasyLap Panel must not be in direct contact with snow or ice build up for extended periods, e.g. external walls in alpine regions must be protected where snow drifts over winter are expected.

The Axon Panel/EasyLap Panel has been tested in accordance with AS/NZS 2908.2 Clause 8.2.3.

KDC - Approved Building Consent Document - 210608 - Minor Variation for cladding change to Axon Board on Cavity - Pg 28 of 58 - 4/04/2022 - aaron.brown

10 Safe Working Practices

WARNING - DO NOT BREATHE DUST AND CUT ONLY IN WELL VENTILATED AREA

Hardie™ fibre cement products products contain sand, a source of respirable crystalline silica

May cause cancer if dust from product is inhaled. Causes damage to lungs and respiratory system through prolonged or repeated inhalation of dust from product.

Intact fibre cement products are not expected to result in any adverse toxic effects. The hazard associated with fibre cement arises from the respirable crystalline silica present in dust generated by activities such as cutting, rebating, drilling, routing, sawing, crushing, or otherwise abrading fibre cement, and when cleaning up, disposing of or moving dust.

When doing any of these activities in a manner that generates dust, follow James Hardie instructions and best practices to reduce or limit the release of dust.

If using a dust mask or respirator, use an AS/NZS 1716 P1 filter and refer to Australian/New Zealand Standard 1715:2009 Selection, Use and Maintenance of Respiratory Protective Equipment for more extensive guidance and more options for selecting respirators for workplaces. For further information, refer to our installation instructions and Safety Data Sheets available at www.jameshardie.co.nz.

FAILURE TO ADHERE TO OUR WARNINGS, SAFETY DATA SHEETS, AND INSTALLATION INSTRUCTIONS MAY LEAD TO SERIOUS PERSONAL INJURY OR DEATH.

Crystalline Silica is

- Commonly known as sand or quartz
- Found in many building products e.g. concrete, bricks, grout, wallboard, ceramic tiles, and all fibre cement materials

Why is Crystalline Silica a health hazard?

- Silica can be breathed deep into the lungs when present in the air as a very fine (respirable) dust
- Exposure to silica dust without taking the appropriate safety measures to minimise the amount being breathed in, can lead to a potentially fatal lung disease – silicosis – and has also been linked with other diseases including cancer. Some studies suggest that smoking may increase these risks
- The most hazardous dust is the dust you cannot see!

When is Crystalline Silica a health hazard?

- It's dangerous to health if safety protocols to control dust are not followed when cutting, drilling or rebating a product containing crystalline silica and when cleaning up
- Products containing silica are harmless if intact (e.g. an un-cut sheet of wall board)

KDC - Approved Building Consent Document - 210608 - Minor Variation for cladding change to Axon Board on Cavity - Pg 29 of 58 - 4/04/2022 - aaron.brown

Avoid breathing in crystalline silica dust

Safe working practices

- ✕ NEVER use a power saw indoors or in a poorly ventilated area
- ✕ NEVER dry sweep
- ✓ ALWAYS use M Class or higher vacuum or damp down dust before sweeping up
- ✕ NEVER use grinders
- ✓ ALWAYS use a dust reducing circular saw equipped with a sawblade specifically designed to minimise dust creation when cutting fibre cement – preferably a sawblade that carries the Hardie™ Blade name or one with at least equivalent performance – connected to an M Class or higher vacuum
- ✓ Before cutting warn others in the area to avoid dust
- ✓ ALWAYS follow tool manufacturers' safety recommendations
- ✓ ALWAYS expose only the minimum required depth of blade for the thickness of fibre cement to be cut
- ✓ ALWAYS wear a properly-fitted, approved dust mask or respirator P1 or higher in accordance with applicable government regulations and manufacturer instructions
- ✓ Consider rotating personnel across cutting tasks to further limit respirable silica exposures.

When cutting Axon or EasyLap Panels:

- ✓ Work outdoors only
- ✓ Make sure you work in a well ventilated area
- ✓ Position cutting station so wind will blow dust away from yourself and others in the working area
- ✓ Rotate employees across cutting task over duration of shift
- ✓ Cut products with a Hardie™ Blade Saw Blade (or equivalent) and a dust reducing circular saw connected to a M Class or higher vacuum
- ✓ When sawing, sanding, rebating, drilling or machining fibre cement products, always:
  - Wear your P1 or higher (correctly fitted in accordance with manufacturers' instructions), ask others to do the same.
  - Keep persons on site at least 2 metres and as far as practicable away from the cutting station while the saw is in operation
  - If you are not clean shaven, then use a powered air respirator with a loose fitting head top
  - Wear safety glasses
  - Wear hearing protection
- ✓ Make sure you clean up BUT never dry sweep. Always hose down with water/wet wipe or use an M Class or higher vacuum

Working Instructions

Hardie™ Blade Saw Blade

The Hardie™ Blade Saw Blade used with a dust-reducing saw is ideal for fast, clean cutting of Hardie™ fibre cement products. A dust-reducing saw uses a dust collector connected to a M Class or higher vacuum. When sawing, clamp a straight edge to the sheet as a guide and run the saw base plate along the straight edge when making the cut.

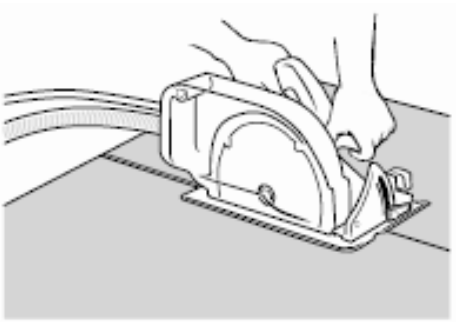

KDC - Approved Building Consent Document - 210608 - Minor Variation for cladding change to Axon Board on Cavity - Pg 30 of 58 - 4/04/2022 - aaron.brown

Hole-Forming

For smooth clean cut circular holes:

- Mark the centre of the hole on the sheet
- Pre-drill a 'pilot' hole
- Using the pilot hole as a guide, cut the hole to the appropriate diameter with a hole saw fitted to a heavy duty electric drill

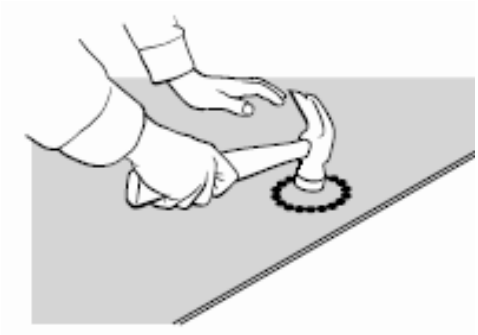

For irregular holes:

- Small rectangular or circular holes can be cut by drilling a series of small holes around the perimeter of the hole then tapping out the waste piece from the sheet face
- Tap carefully to avoid damage to sheets, ensuring that the sheet edges are properly supported

10.1 Storage and delivery

Keeping products and people safe

Off loading

✓ Hardie™ fibre cement products should be off-loaded carefully by hand or by forklift

✓ Hardie™ fibre cement products should not be rolled or dumped off a truck during the delivery to the jobsite

Storage

Hardie™ fibre cement products should be stored:

✓ In their original packaging

✓ Under cover where possible or otherwise protected with a waterproof covering to keep products dry

✓ Off the ground – either on a pallet or adequately supported on timber or other spacers

✓ Flat so as to minimise bending

Hardie™ fibre cement products must not be stored:

✗ Directly on the ground

✗ In the open air exposed to the elements

James Hardie is not responsible for damage due to improper storage and handling.

10.2 Tips for safe and easy handling of Axon and EasyLap Panels

✗ Do not lift planked products flat and in the middle

✓ Carry the products on the edge

✓ If only one person is carrying the product, hold it in the middle and spread arms apart to better support the product

✓ If two people are carrying the plank, hold it near each end and on edge

✓ Exercise care when handling weatherboard products to avoid damaging the edges/corners

KDC - Approved Building Consent Document - 210608 - Minor Variation for cladding change to Axon Board on Cavity - Pg 31 of 58 - 4/04/2022 - aaron.brown

11 Accessories

Table 4

Axon Panel information					
Product	**Description**	**Thickness (mm)**	**Size**		**Product Code**
			Length (mm)	**Width (mm)**	
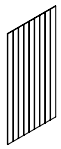	**Axon Panel 133 Smooth** Is a shiplap jointed panel to hide the panel joints. The panel is face primed. The panel has grooves at 133mm centres. The panel must be installed vertically. Nom. Panel Mass: 12.1kg/m²	9	2450	1200	**403780**
			2750	1200	**403781**
			3000	1200	**403782**
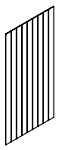	**Axon Panel 133 Grained** Is a shiplap jointed panel to hide the panel joints. The panel is face primed. The panel has grooves at 133mm centres. The panel must be installed vertically. Nom. Panel Mass: 12.1kg/m²	9	3000	1200	**404512**
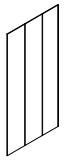	**Axon Panel 400 Smooth** Is a shiplap jointed panel to hide the panel joints. The panel is face primed. The panel has grooves at 400mm centres. The panel must be installed vertically. Nom. Panel Mass: 12.1kg/m2	9	2450	1200	**404414**
			2750	1200	**404415**
			3000	1200	**404416**

Note: The actual width of the panel is 1203mm. All dimensions and masses provided are approximate only and are subject to manufacturing tolerances.

EasyLap Panel information					
Product	**Description**	**Thickness (mm)**	**Size**		**Product Code**
			Length (mm)	**Width (mm)**	
	EasyLap Panel A shiplap edge panel for subtle vertical joints To be finished with site applied acrylic texture finishes.	9	2450	1200	**404764**
			2750	1200	**404763**

Note: All dimensions and masses provided are approximate only and subject to manufacturing tolerances.

KDC - Approved Building Consent Document - 210608 - Minor Variation for cladding change to Axon Board on Cavity - Pg 32 of 58 - 4/04/2022 - aaron.brown

Accessories/tools supplied by James Hardie			
Accessories	**Description and Material Code**	**Quantity/Size (approx)**	**Product Code**
	**Hardie™ 9mm Panel Aluminium External Box Corner** A box corner mould to form the external joints. 9mm etch prime.	2450mm long 2750mm long 3000mm long 4000mm long	**304509** **304510** **305150** **305808**
	**Hardie™ 9mm Panel Aluminium Horizontal 'h' Mould** A horizontal flashing to flash the horizontal joints. 9mm etch prime.	3000mm long	**304508**
	**Aluminium 'h' Mould Jointer** A jointer to cover the butt joint of 'h' mould.	100mm long	**304512**
	**uPVC Corner Under Flashing** A 50 x 50mm corner under flashing for internal and external joints	3000mm long	**303745**
	**uPVC Vent Strip** Used to provide protection from vermin entering cavity space.	3000mm long	**302490**
	**INSEAL® 3259 Tape** Black 48mm tape to be used under the vertical shiplap joint. Black 80mm tape to be used at corners.	50m roll 80m roll	**300767** **300769**
Tools			
	**Hardie™ Blade Saw Blade** Diamond tip 184mm diameter fibre cement circular saw blade. Spacers not included.	Each	**300660**
	**Hardie™ Flex Stainless Steel 316 Nails** For fixing panels through cavity battens. 60 x 3.15mm	5kg	**302782**
	**Hardie™ Flex Hot Dip Galv. Nails** For fixing panels through cavity battens. 60 x 3.15mm	5kg	**302784**
	**Hardie™ Flex Stainless Steel 316 Nails** For fixing panels through cavity battens. 75 x 3.15mm	5kg	**304253**
	**Hardie™ Flex Hot Dip Galv. Nails** For fixing panels through cavity battens. 75 x 3.15mm	5kg	**304251**

KDC - Approved Building Consent Document - 210608 - Minor Variation for cladding change to Axon Board on Cavity - Pg 33 of 58 - 4/04/2022 - aaron.brown

Accessories/tools not supplied by James Hardie

James Hardie recommends the following products for use in conjunction with Axon Panel/EasyLap Panel. James Hardie does not supply these products and does not provide a warranty for their use. Please contact component manufacturer for information on their warranties and further information on their products.

Accessories	Description
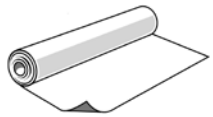	**Flexible underlay** To comply with Table 23 of E2/AS1.
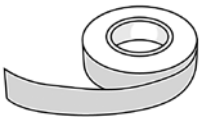	**Flexible tape** A flexible self-adhesive tape used in preparation of a window. Refer to the Window installation section in this manual for more information. e.g. Tyvek®, Protecto® or Thermakraft™ or similar.
	**Joint sealant** Paintable flexible sealants are recommended for filling the joints. Refer to Section 7.2 for information.
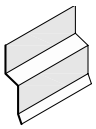	**Head flashing** Required over window heads to be supplied by window installer. Material must comply with Table 20 and 21 of E2/AS1.
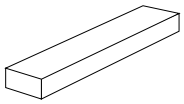	**Timber cavity batten** H3.1 minimum treated
	**Stain** Timbakote® Tel: 0800 846 225

KDC - Approved Building Consent Document - 210608 - Minor Variation for cladding change to Axon Board on Cavity - Pg 34 of 58 - 4/04/2022 - aaron.brown

12 Details

The following generic details have been provided in this document for cavity construction methods.

Table 5

Panel fixing		
Description	**Cavity Construction**	
	Figure No.	**Page No.**
Typical Framing Setout	Figure 1	22
Batten Fixing	Figure 2	23
Typical Panel Fixing Setout	Figure 3	24
Foundation Detail	Figure 4	25
Enclosed Deck	Figure 5	25
Axon Panel cavity shiplap joint	Figure 6	26
EasyLap Panel shiplap joint	Figure 7	26
Internal Corner Detail	Figure 8	27
External Corner Detail	Figure 9	27
Soffit Detail	Figure 10	28
Window head	Figure 11	29
Window Sill	Figure 12	30
Window jamb	Figure 13	31
Window jamb with scriber	Figure 14	31
Alternative Head Flashing Termination Against Batten	Figure 15	32
Horizontal joint detail	Figure 16	33
Aluminium 'h' Mould Jointer	Figure 17	33
Corner at 'h' Mould Joint Detail	Figure 18	34
Pipe Penetration	Figure 19	35
Cavity Interstorey Drainage	Figure 20	36
One piece apron flashing joint	Figure 21	37
Enclosed deck balustrade to wall junction	Figure 22	38
Balustrade to wall	Figure 23	39
Parapet	Figure 24	40
Roof to Wall Junction Detail	Figure 25	41

KDC - Approved Building Consent Document - 210608 - Minor Variation for cladding change to Axon Board on Cavity - Pg 35 of 58 - 4/04/2022 - aaron.brown

Figure 1: Cavity fixed typical framing setout

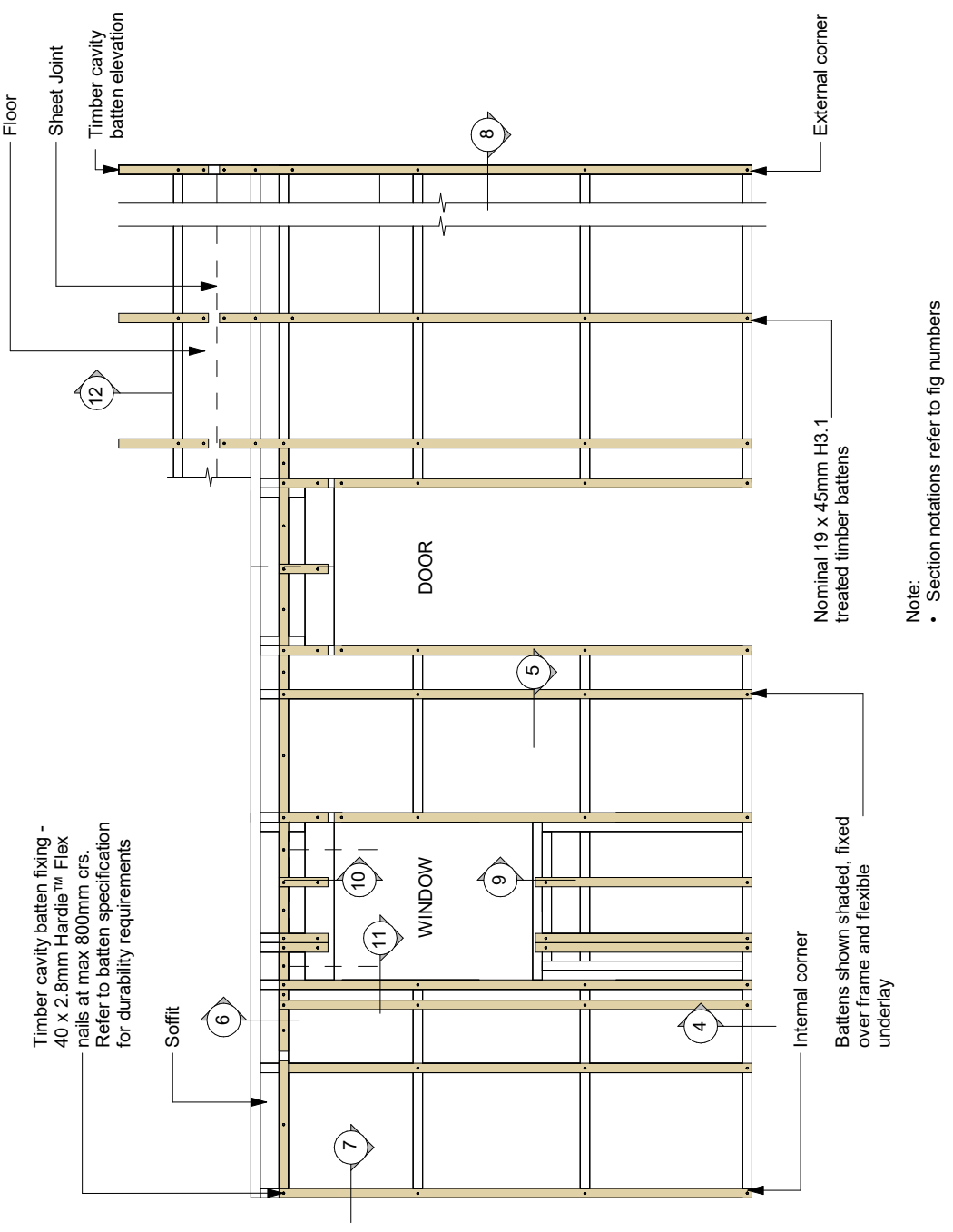

KDC - Approved Building Consent Document - 210608 - Minor Variation for cladding change to Axon Board on Cavity - Pg 36 of 58 - 4/04/2022 - aaron.brown

Figure 2: Cavity batten fixing

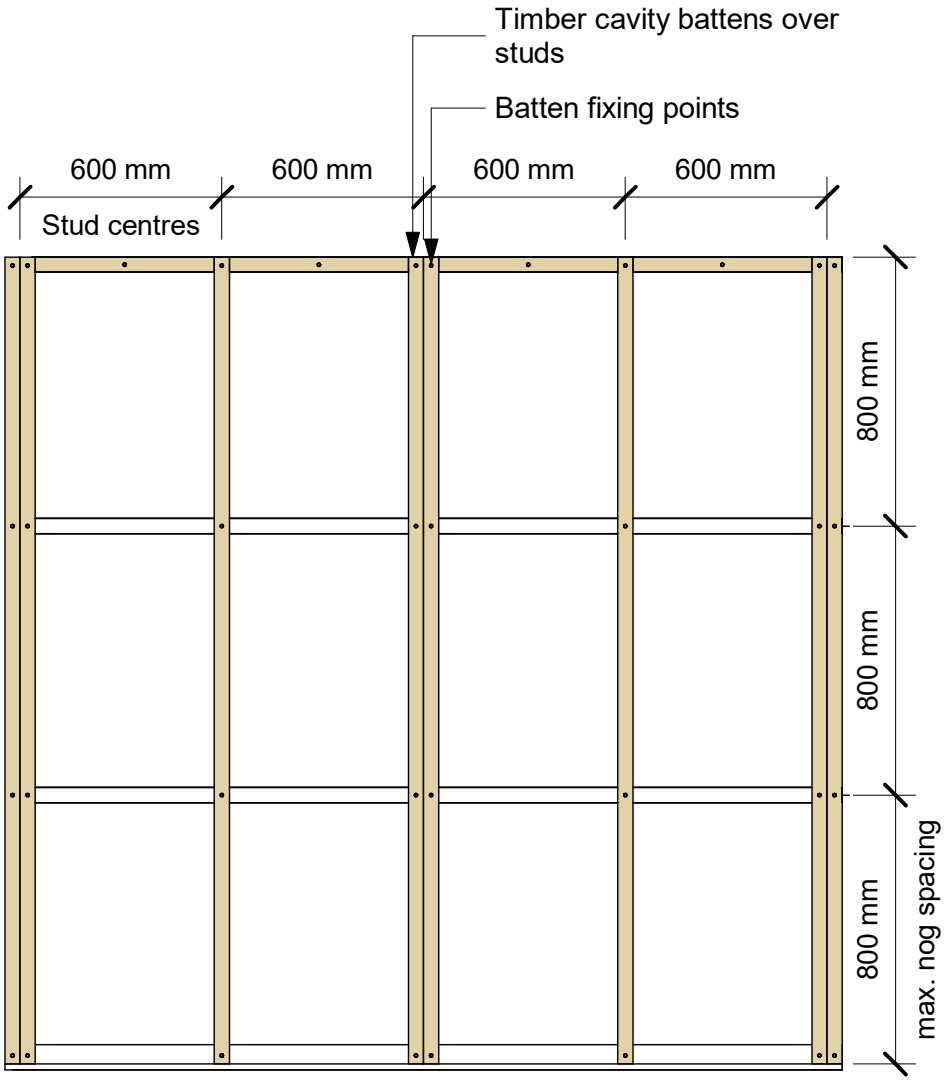

Note:

- Check Figure 5 for framing and batten requirements for vertical joint

KDC - Approved Building Consent Document - 210608 - Minor Variation for cladding change to Axon Board on Cavity - Pg 37 of 58 - 4/04/2022 - aaron.brown

Figure 3: Cavity fixed typical panel fixing setout

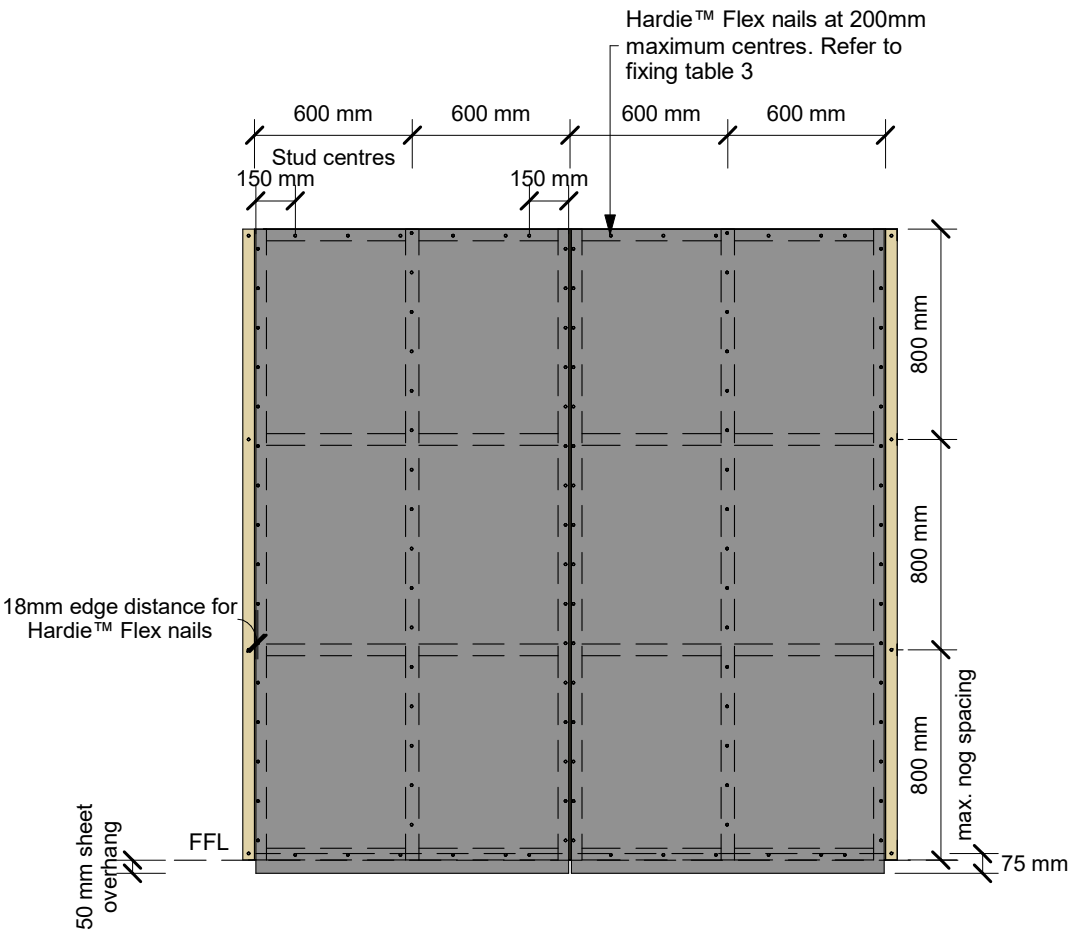

KDC - Approved Building Consent Document - 210608 - Minor Variation for cladding change to Axon Board on Cavity - Pg 38 of 58 - 4/04/2022 - aaron.brown

Figure 4: Cavity fixed foundation detail

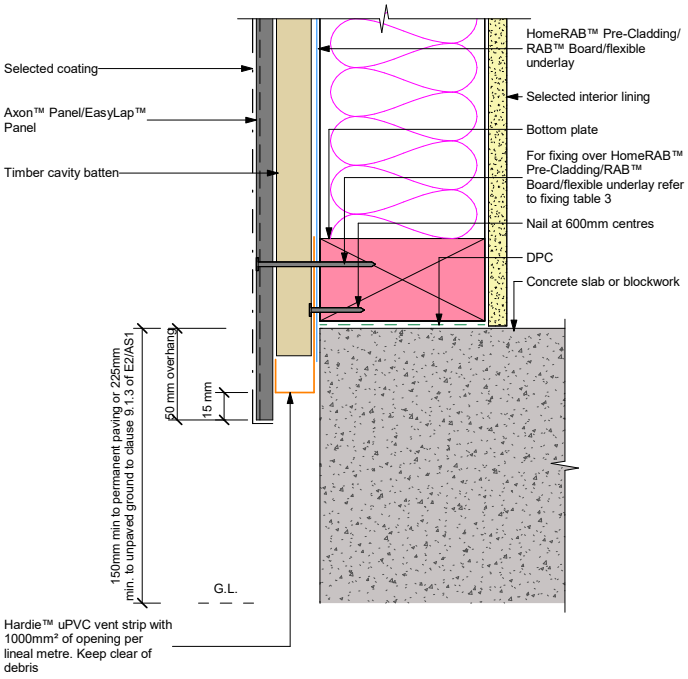

Note: Refer to Section 2.4 for further information

Figure 5: Cavity fixed enclosed deck detail

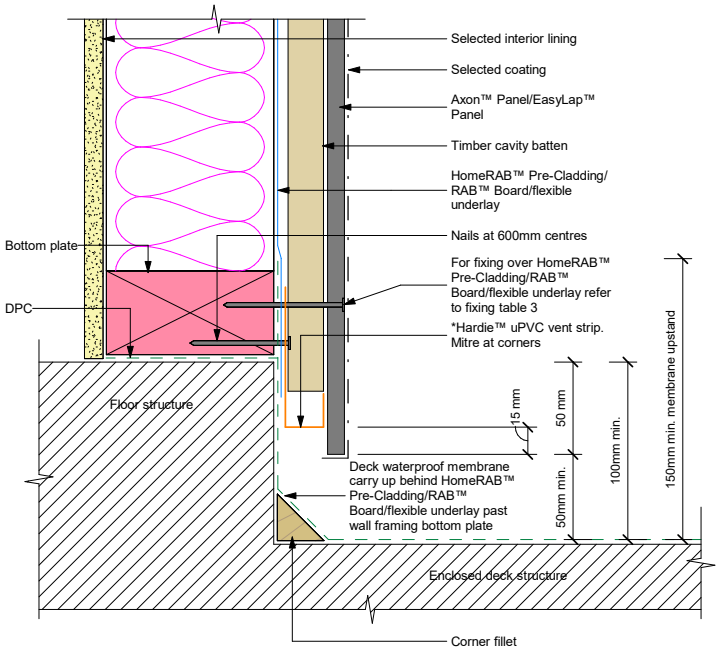

*Drain holes in Hardie™ uPVC vent strip to achieve the required ventilation openings of 1000mm² per lineal metre

KDC - Approved Building Consent Document - 210608 - Minor Variation for cladding change to Axon Board on Cavity - Pg 39 of 58 - 4/04/2022 - aaron.brown

Figure 6: Axon Panel cavity shiplap joint

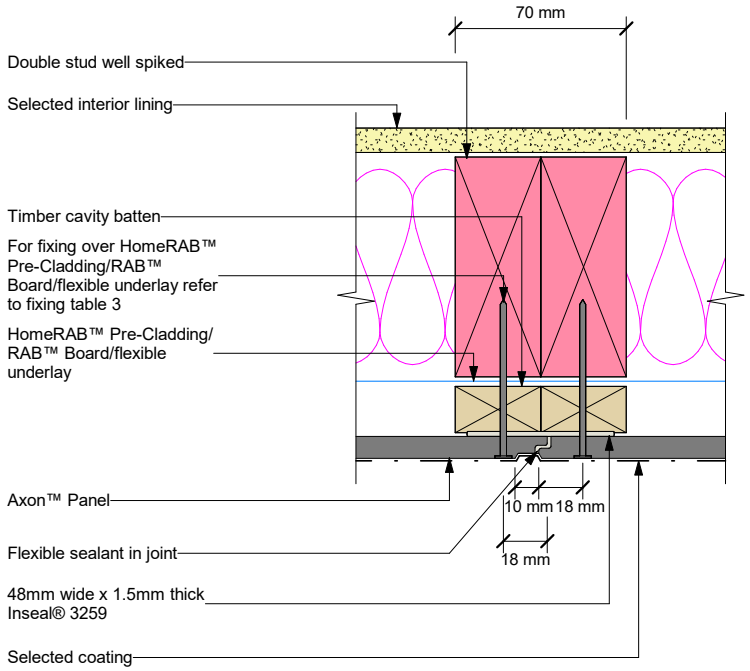

Figure 7: EasyLap Panel cavity shiplap joint

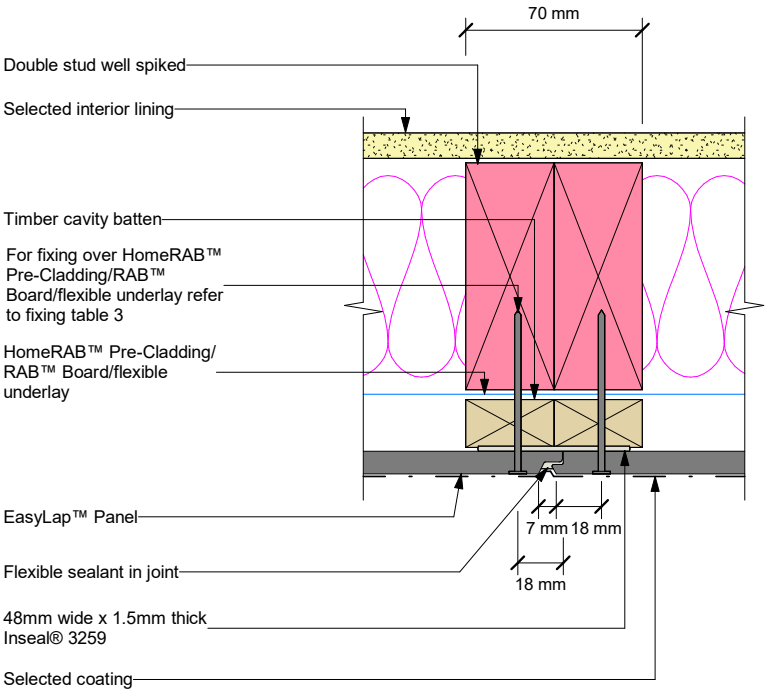

KDC - Approved Building Consent Document - 210608 - Minor Variation for cladding change to Axon Board on Cavity - Pg 40 of 58 - 4/04/2022 - aaron.brown

Figure 8: Cavity internal corner detail

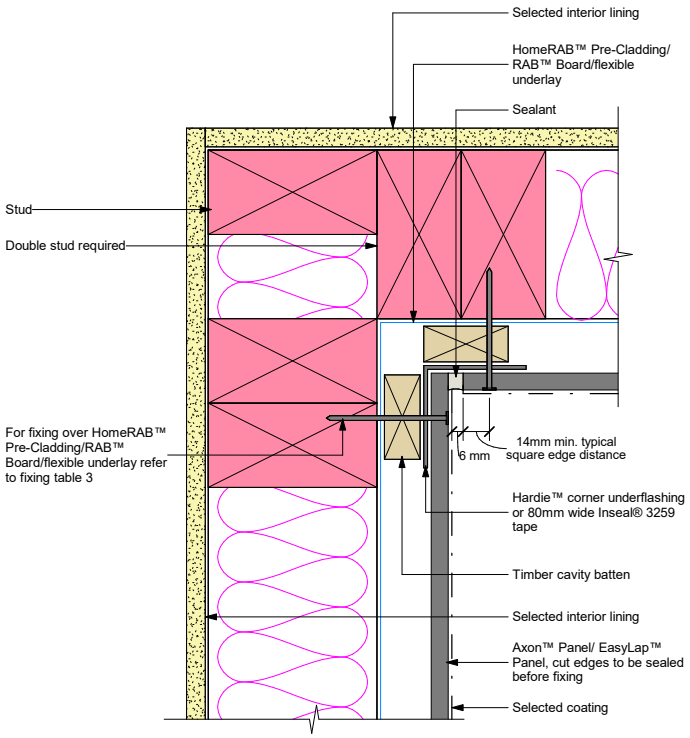

Figure 9: Cavity external corner

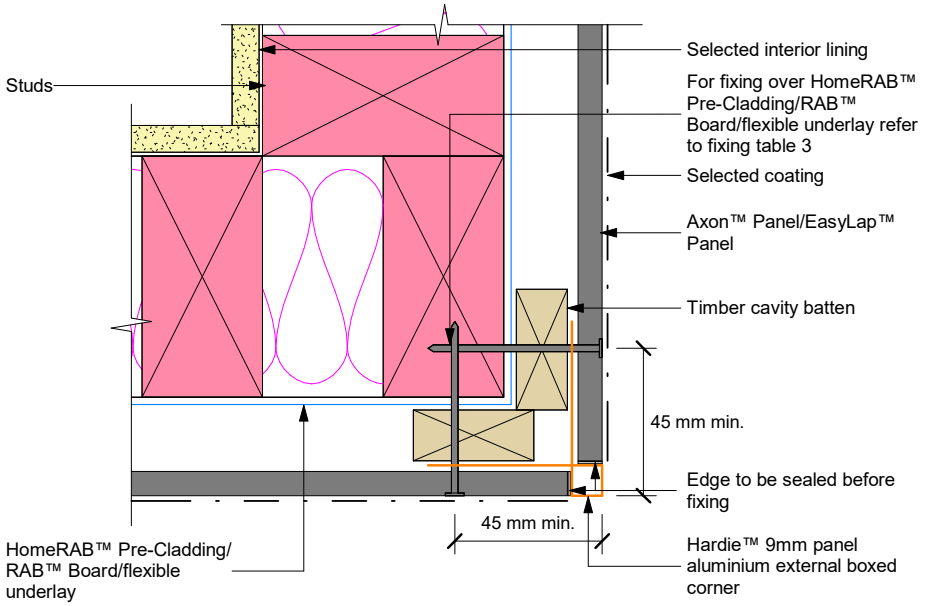

Note:
- Refer to Figure 27 for jointing with 'h' mould
- Do not run corner mould continuous over floor joists.

KDC - Approved Building Consent Document - 210608 - Minor Variation for cladding change to Axon Board on Cavity - Pg 41 of 58 - 4/04/2022 - aaron.brown

Figure 10: Cavity soffit detail

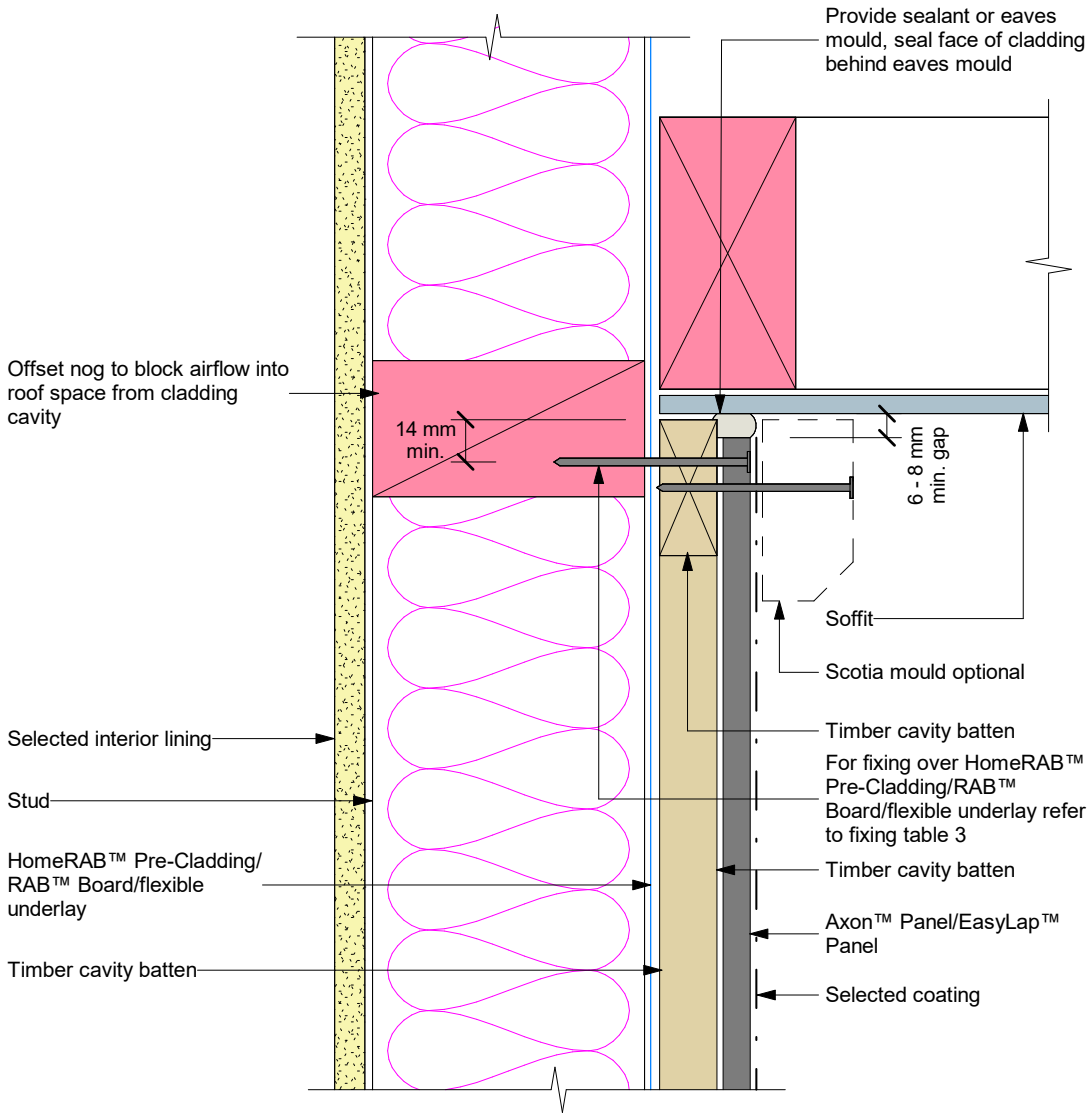

Note: Site cut edges to be primed

KDC - Approved Building Consent Document - 210608 - Minor Variation for cladding change to Axon Board on Cavity - Pg 42 of 58 - 4/04/2022 - aaron.brown

Figure 11: Cavity window head

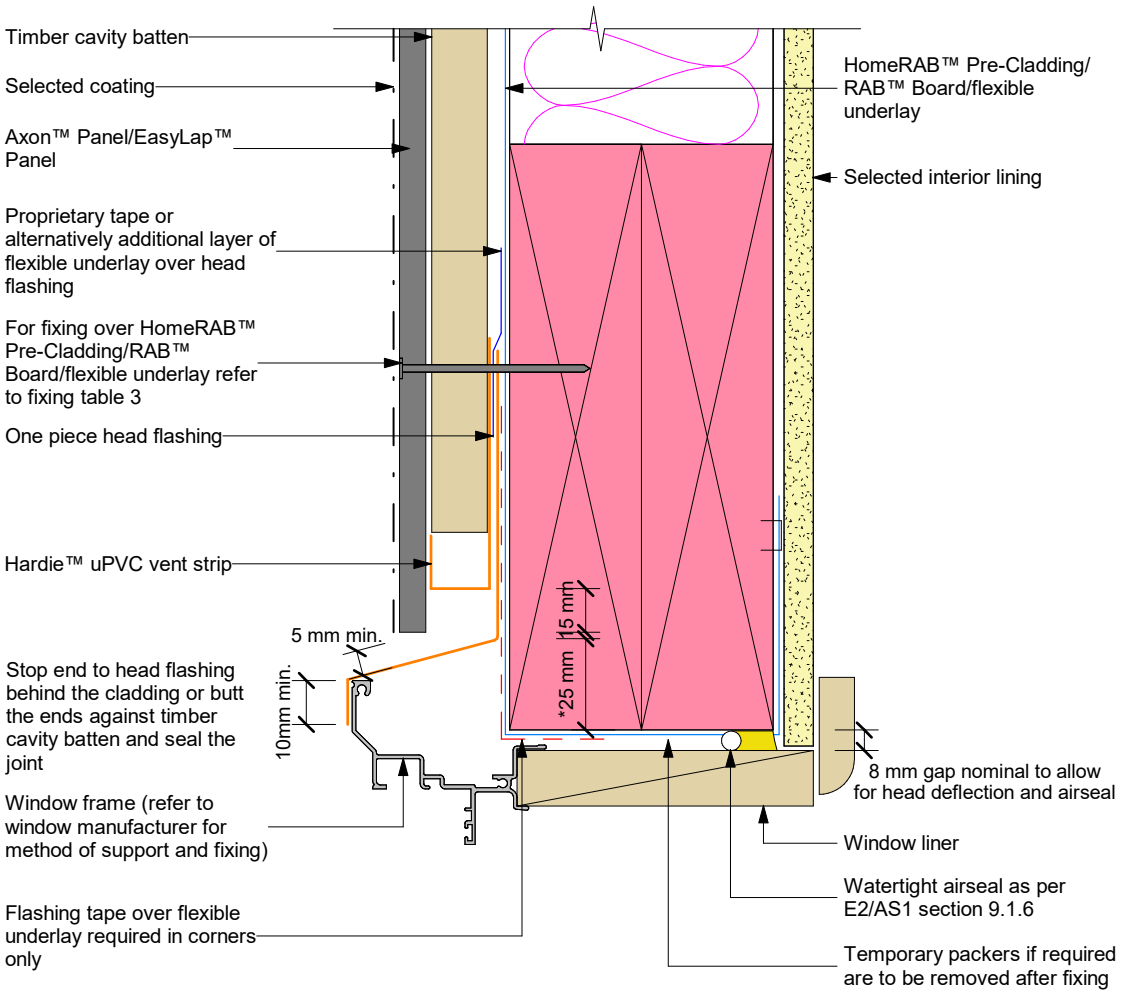

Note:

- When HomeRAB™ Pre-Cladding/ RAB™ Board is used flashing tape to be applied to the entire window opening
- Sealant must be installed between head flashing and window flange in VH and EH wind zones and SED projects
- Alternatively, the head flashing can be formed with stop ends as per E2/AS1

KDC - Approved Building Consent Document - 210608 - Minor Variation for cladding change to Axon Board on Cavity - Pg 43 of 58 - 4/04/2022 - aaron.brown

Figure 12: Cavity window sill

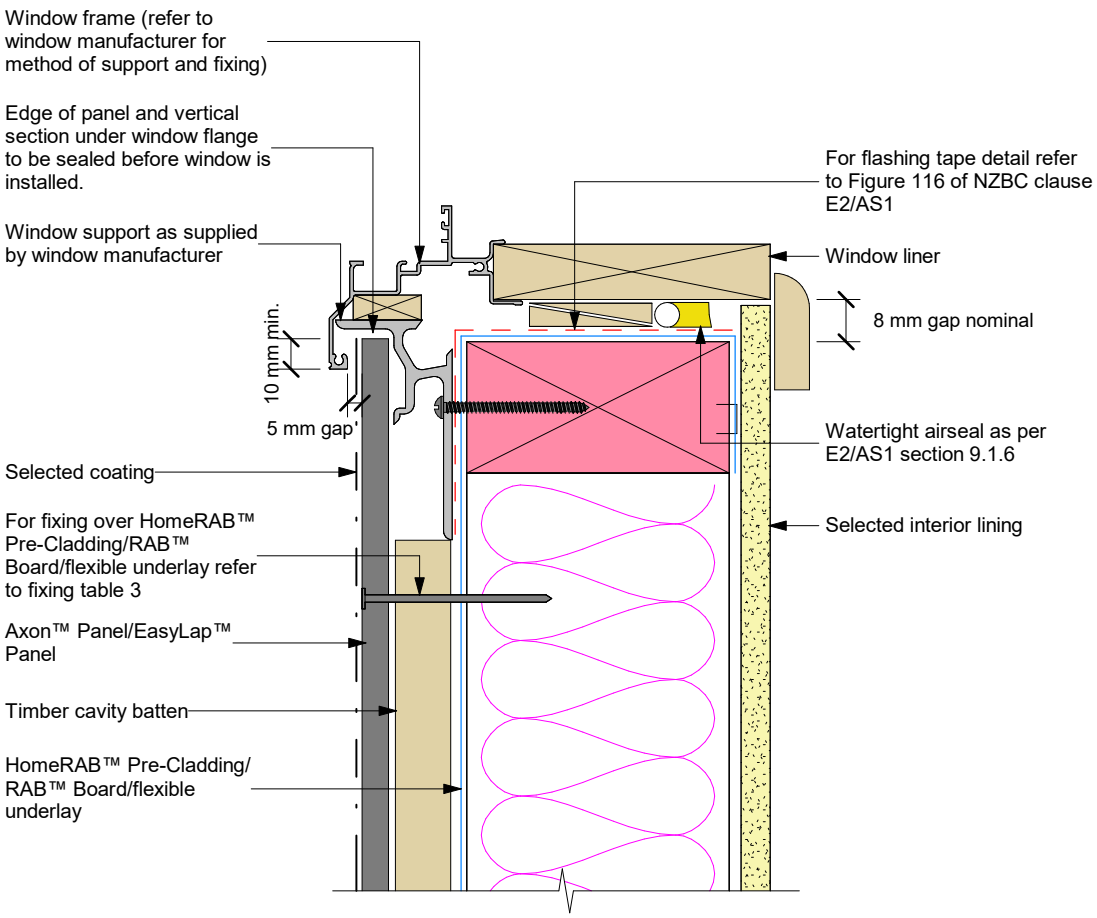

General notes for materials selection

* Flexible underlay must comply with acceptable solution E2/AS.
* Flashing tape must have proven compatibility with the selected flexible underlay and other materials with which it comes into contact.
* When HomeRAB™ Pre-Cladding/ RAB™ Board are used flashing tape to be applied to the entire opening.

Refer to the manufacturer or supplier for technical information for these materials.

KDC - Approved Building Consent Document - 210608 - Minor Variation for cladding change to Axon Board on Cavity - Pg 44 of 58 - 4/04/2022 - aaron.brown

Figure 13: Cavity window jamb

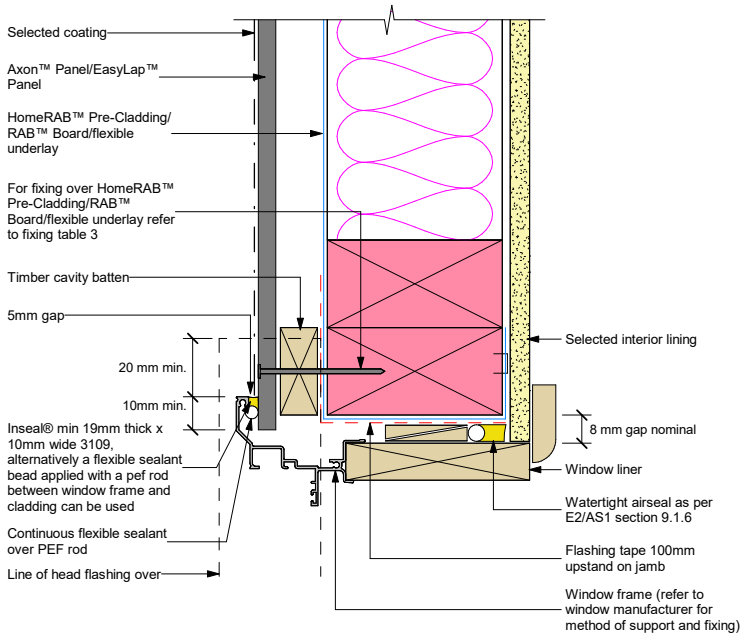

Note: When HomeRAB™ Pre-Cladding/ RAB™ Board is used flashing tape or flexible underlay to be applied to the entire window opening.

Figure 14: Cavity window jamb with scriber

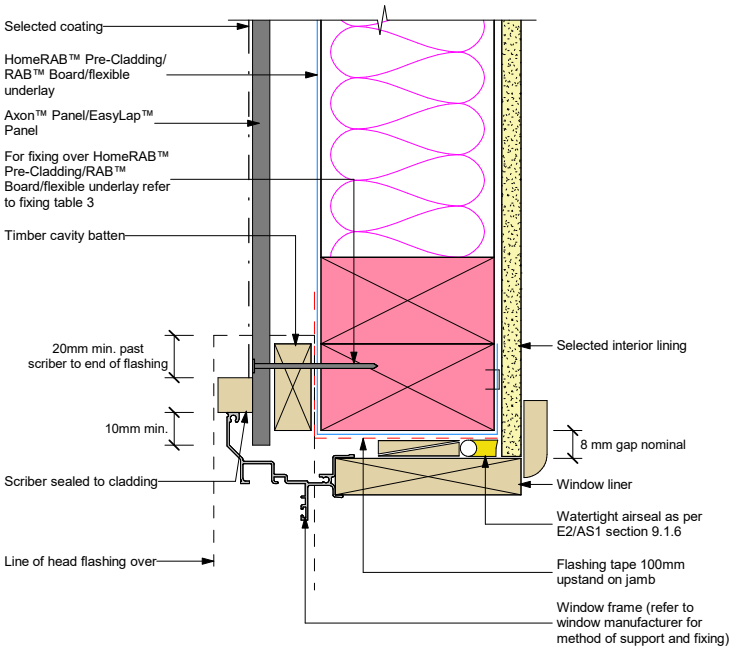

Note: When HomeRAB™ Pre-Cladding/RAB™ Board is used flashing tape to be applied to the entire window opening.

KDC - Approved Building Consent Document - 210608 - Minor Variation for cladding change to Axon Board on Cavity - Pg 45 of 58 - 4/04/2022 - aaron.brown

Figure 15: Cavity alternative head flashing termination against batten

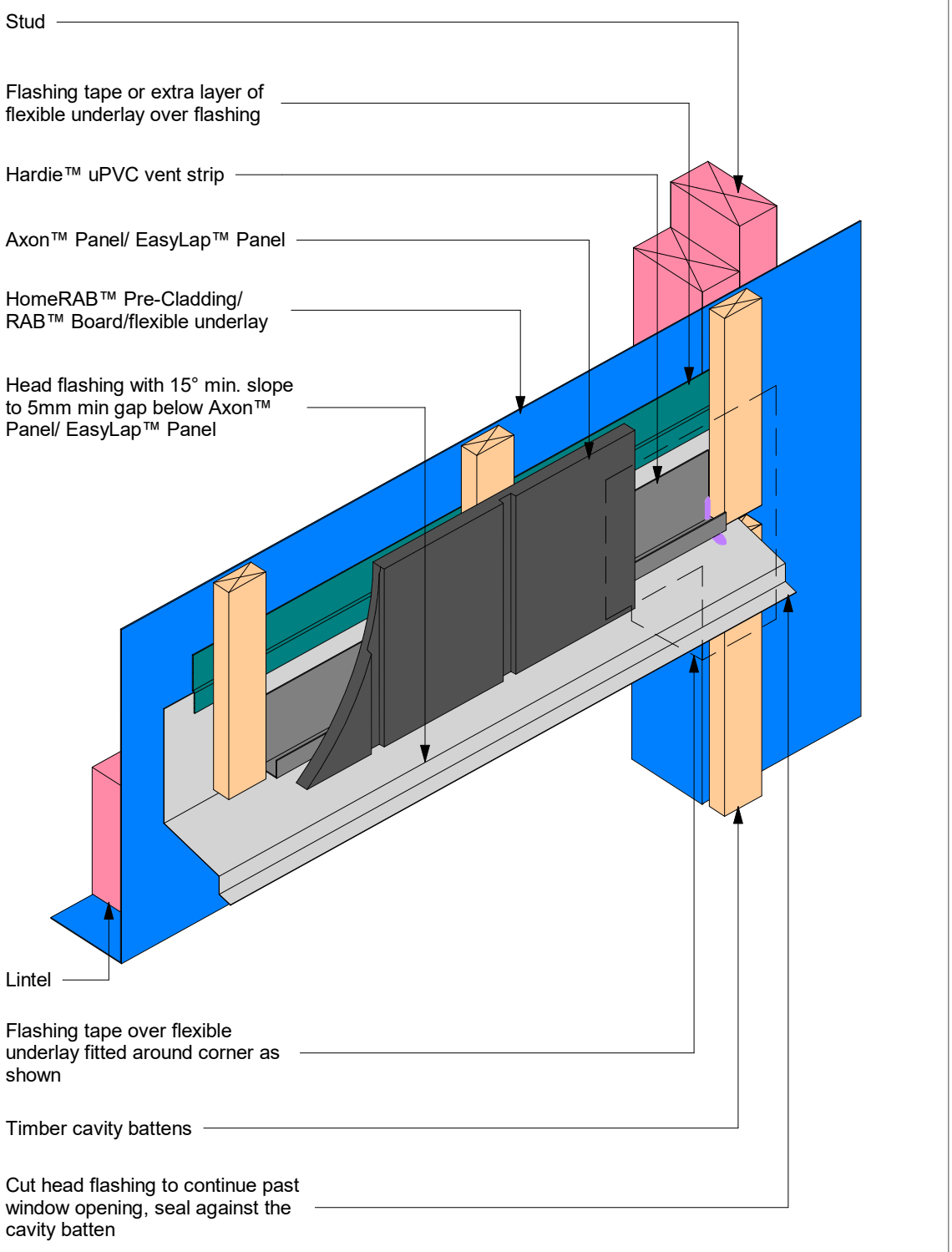

KDC - Approved Building Consent Document - 210608 - Minor Variation for cladding change to Axon Board on Cavity - Pg 46 of 58 - 4/04/2022 - aaron.brown

Figure 16: Cavity horizontal joint detail

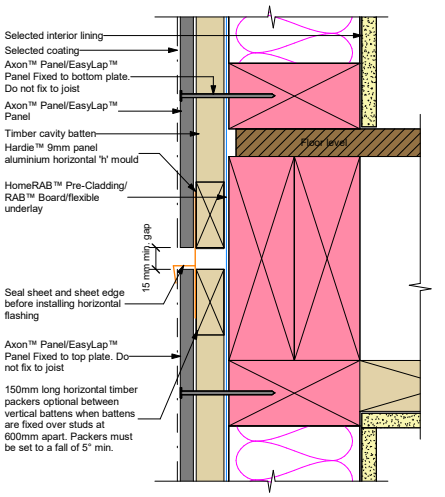

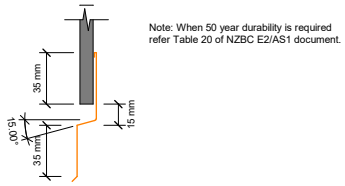

Alternative Flashing Option

Figure 17: Cavity aluminium 'h' mould jointer

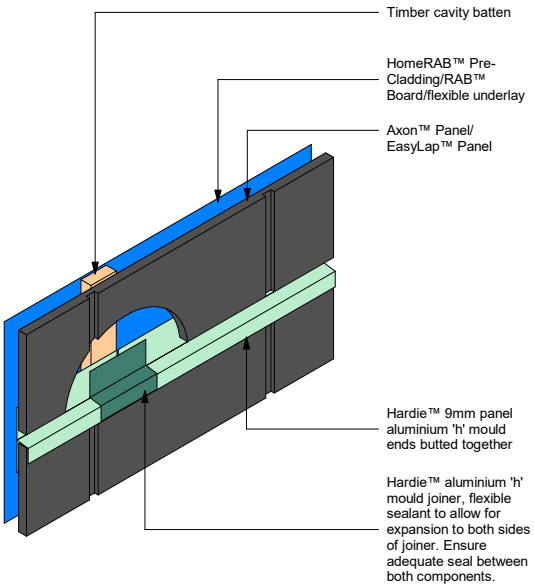

KDC - Approved Building Consent Document - 210608 - Minor Variation for cladding change to Axon Board on Cavity - Pg 47 of 58 - 4/04/2022 - aaron.brown

Figure 18: Cavity corner at 'h' mould joint detail

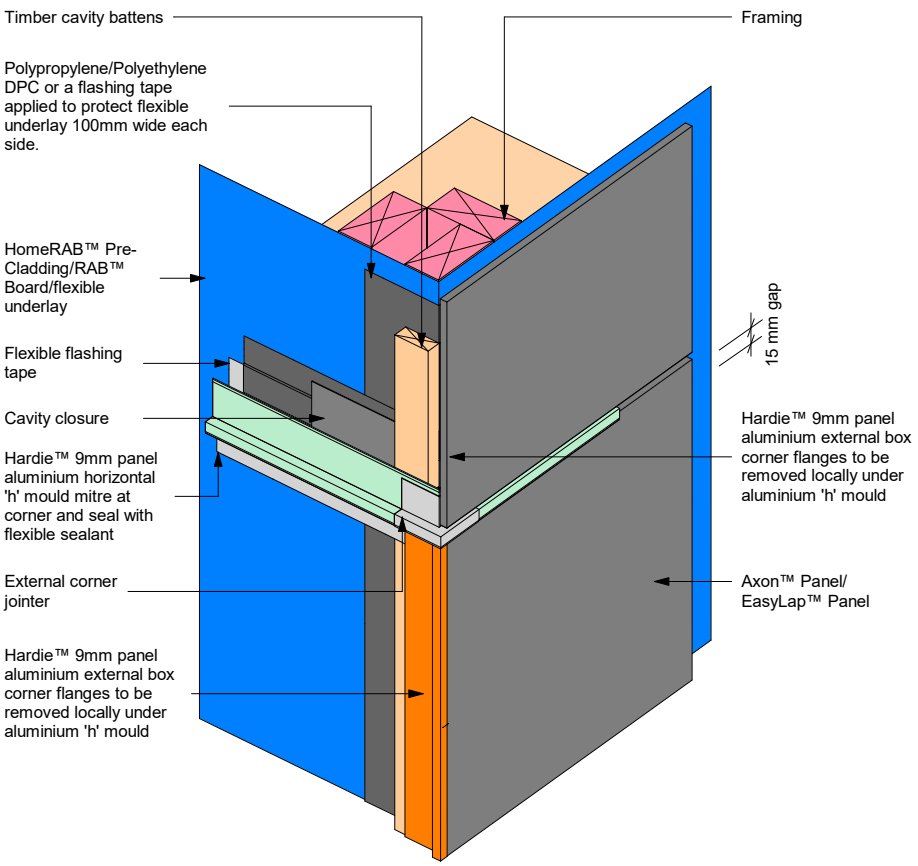

Note: Site cut edges to be primed

KDC - Approved Building Consent Document - 210608 - Minor Variation for cladding change to Axon Board on Cavity - Pg 48 of 58 - 4/04/2022 - aaron.brown

Figure 19: Cavity pipe penetration

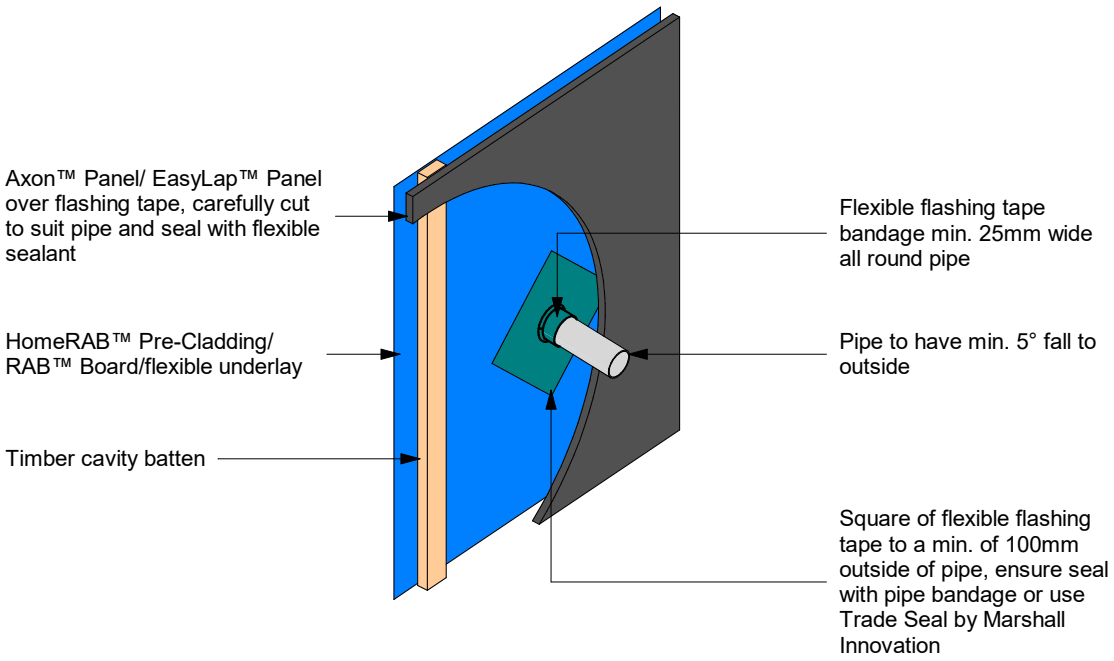

Note: Site cut edges to be primed

KDC - Approved Building Consent Document - 210608 - Minor Variation for cladding change to Axon Board on Cavity - Pg 49 of 58 - 4/04/2022 - aaron.brown

Figure 20: Cavity interstorey drainage

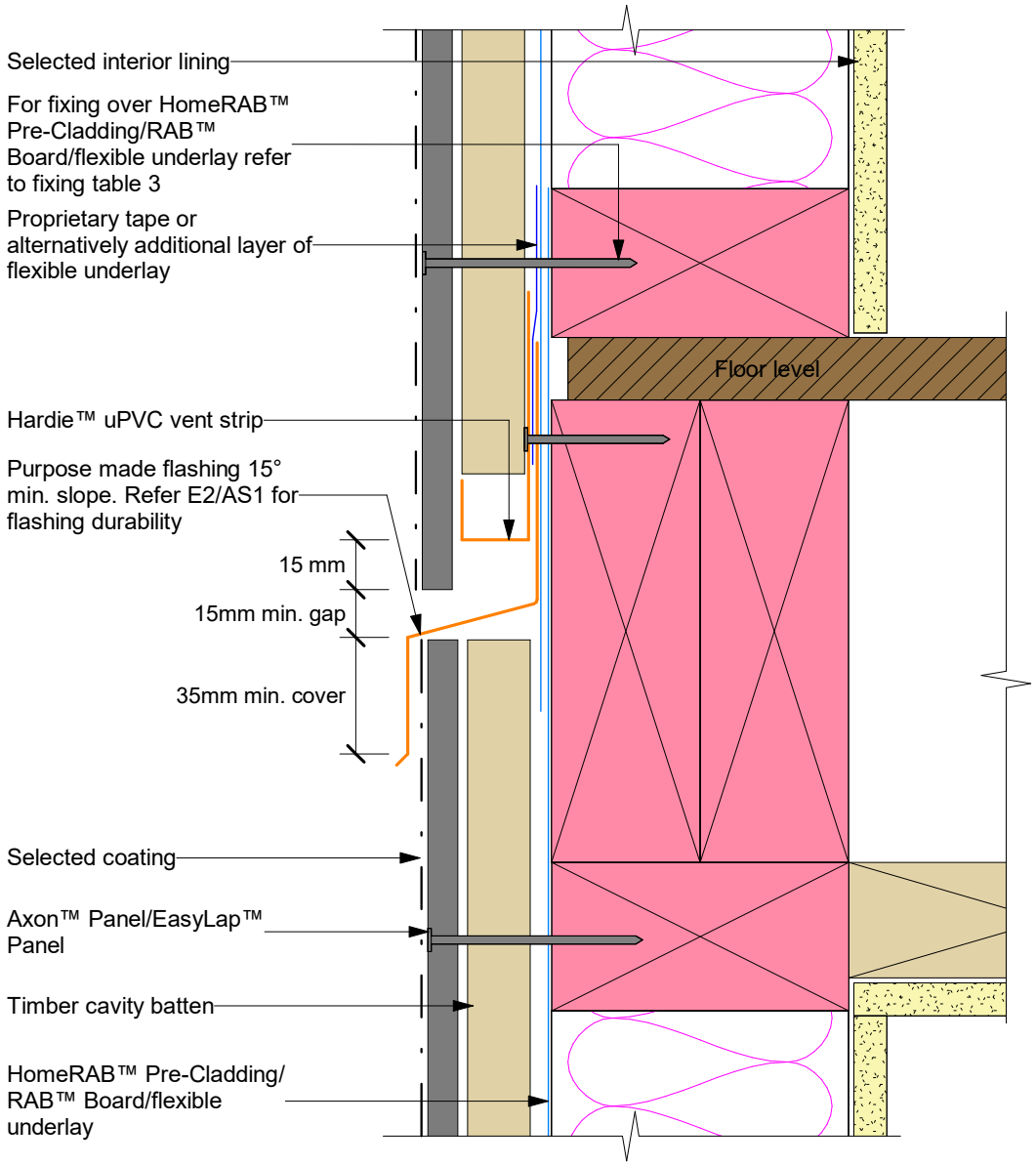

Note:

* Check architect's plans for the type of flashing to be used.
* Check fixing centres and edge distances.
* Cut edges need to be primed with sealer.
* When 50 year durability is required refer Table 20 E2/AS1.
* The flashing to be placed in the centre of the floor joists. Do not fix CLD™ Structural Cavity Battens or panels into floor joists.

KDC - Approved Building Consent Document - 210608 - Minor Variation for cladding change to Axon Board on Cavity - Pg 50 of 58 - 4/04/2022 - aaron.brown

Figure 21: Cavity one piece apron flashing joint

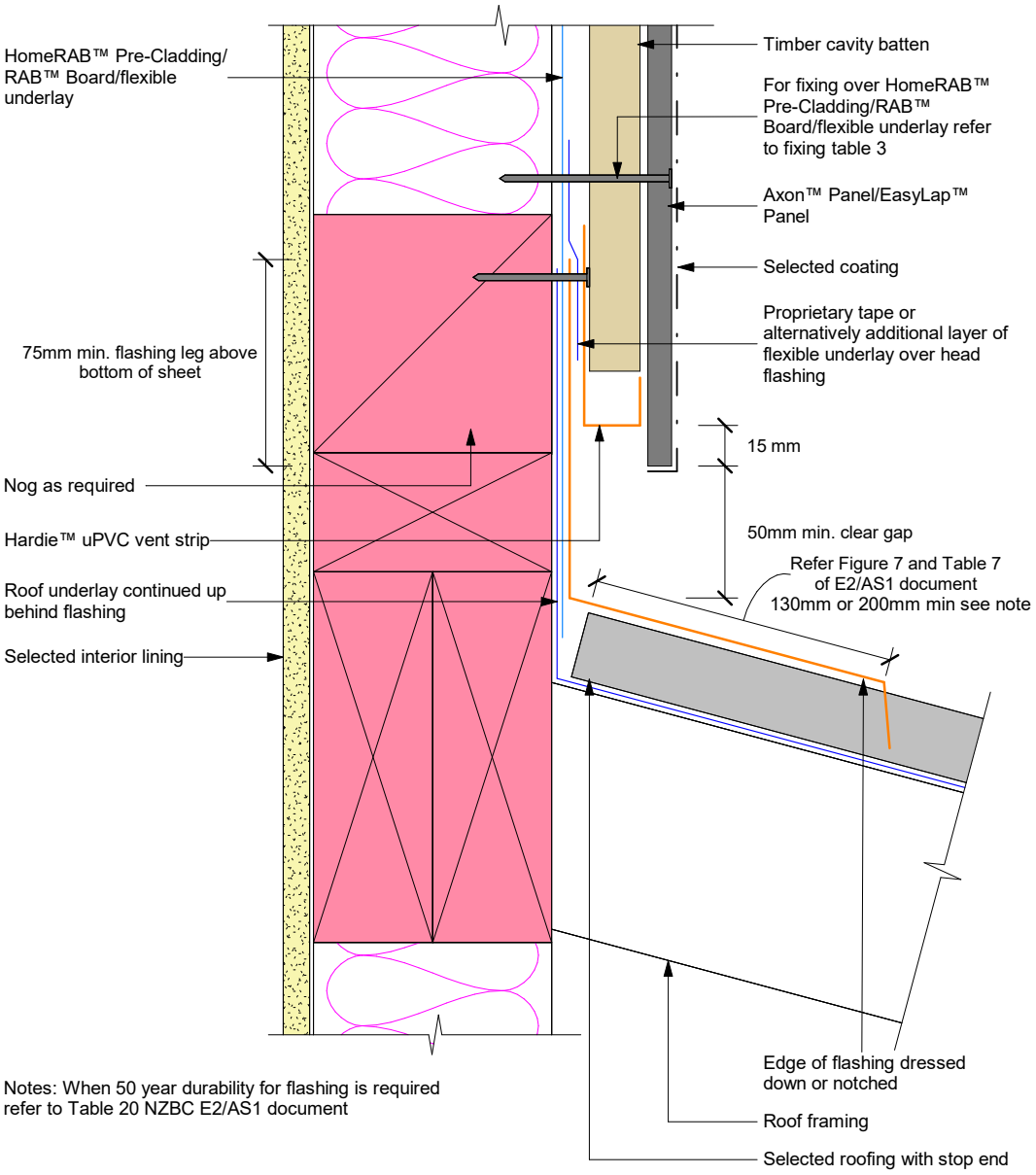

Notes: When 50 year durability for flashing is required refer to Table 20 NZBC E2/AS1 document

KDC - Approved Building Consent Document - 210608 - Minor Variation for cladding change to Axon Board on Cavity - Pg 51 of 58 - 4/04/2022 - aaron.brown

Figure 22: Cavity enclosed deck balustrade to wall junction

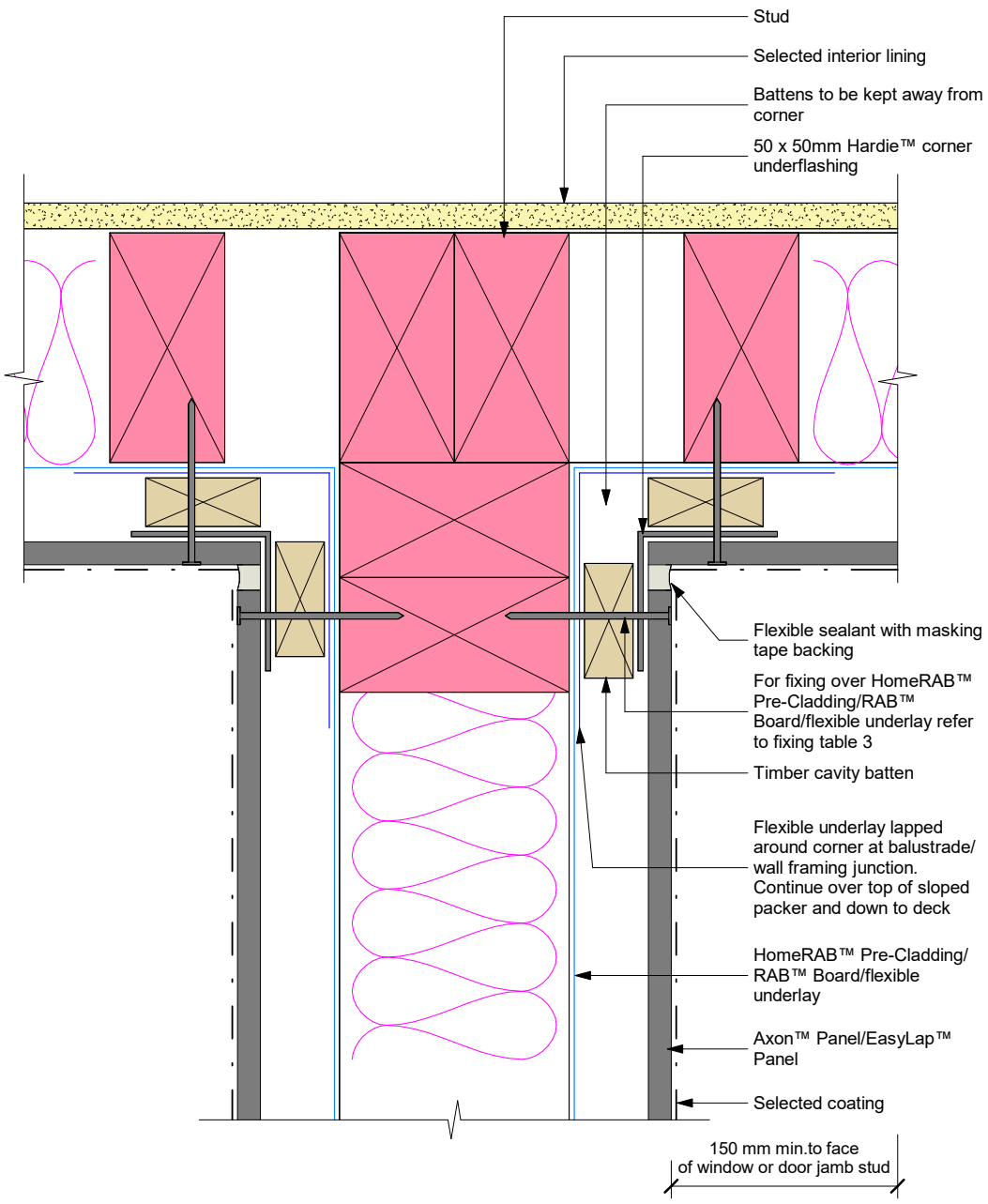

KDC - Approved Building Consent Document - 210608 - Minor Variation for cladding change to Axon Board on Cavity - Pg 52 of 58 - 4/04/2022 - aaron.brown

Figure 23: Cavity balustrade to wall

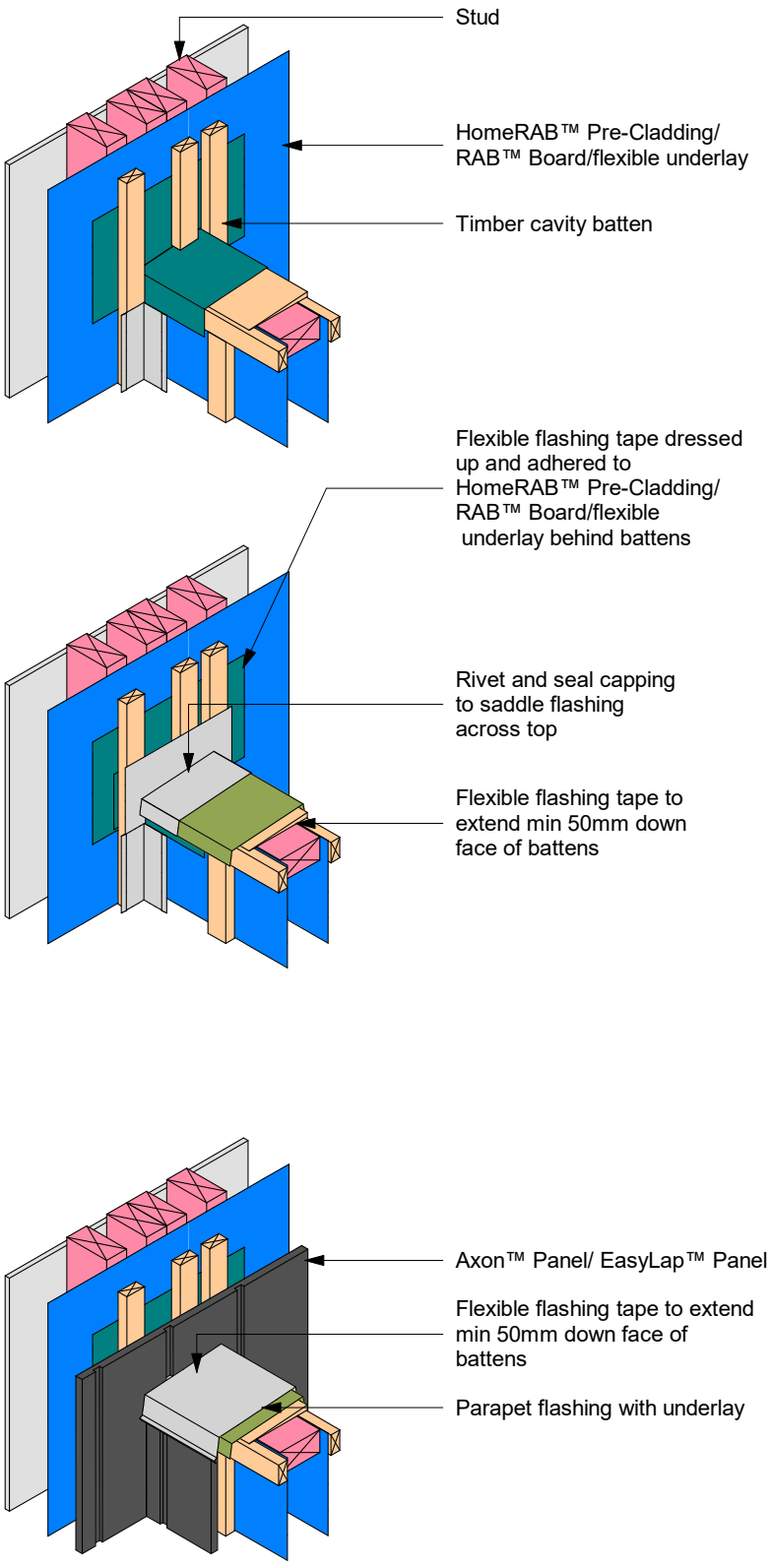

KDC - Approved Building Consent Document - 210608 - Minor Variation for cladding change to Axon Board on Cavity - Pg 53 of 58 - 4/04/2022 - aaron.brown

Figure 24: Cavity parapet flashing

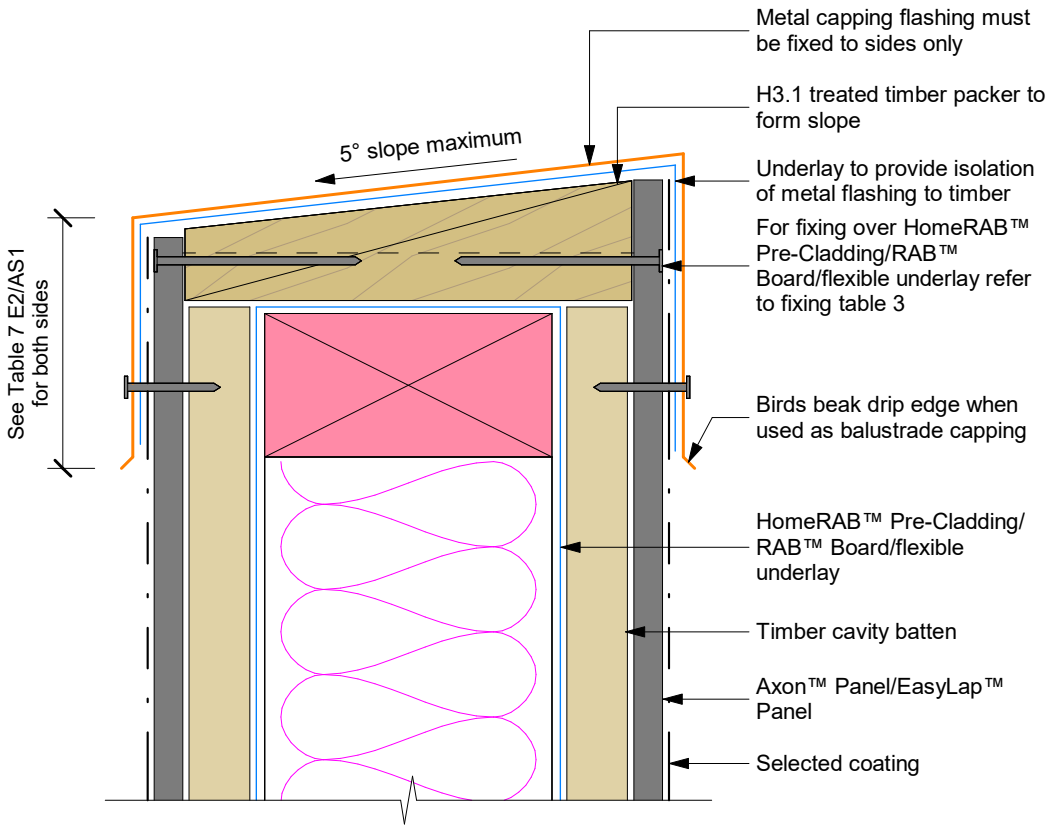

KDC - Approved Building Consent Document - 210608 - Minor Variation for cladding change to Axon Board on Cavity - Pg 54 of 58 - 4/04/2022 - aaron.brown

Figure 25: Cavity roof to wall junction detail

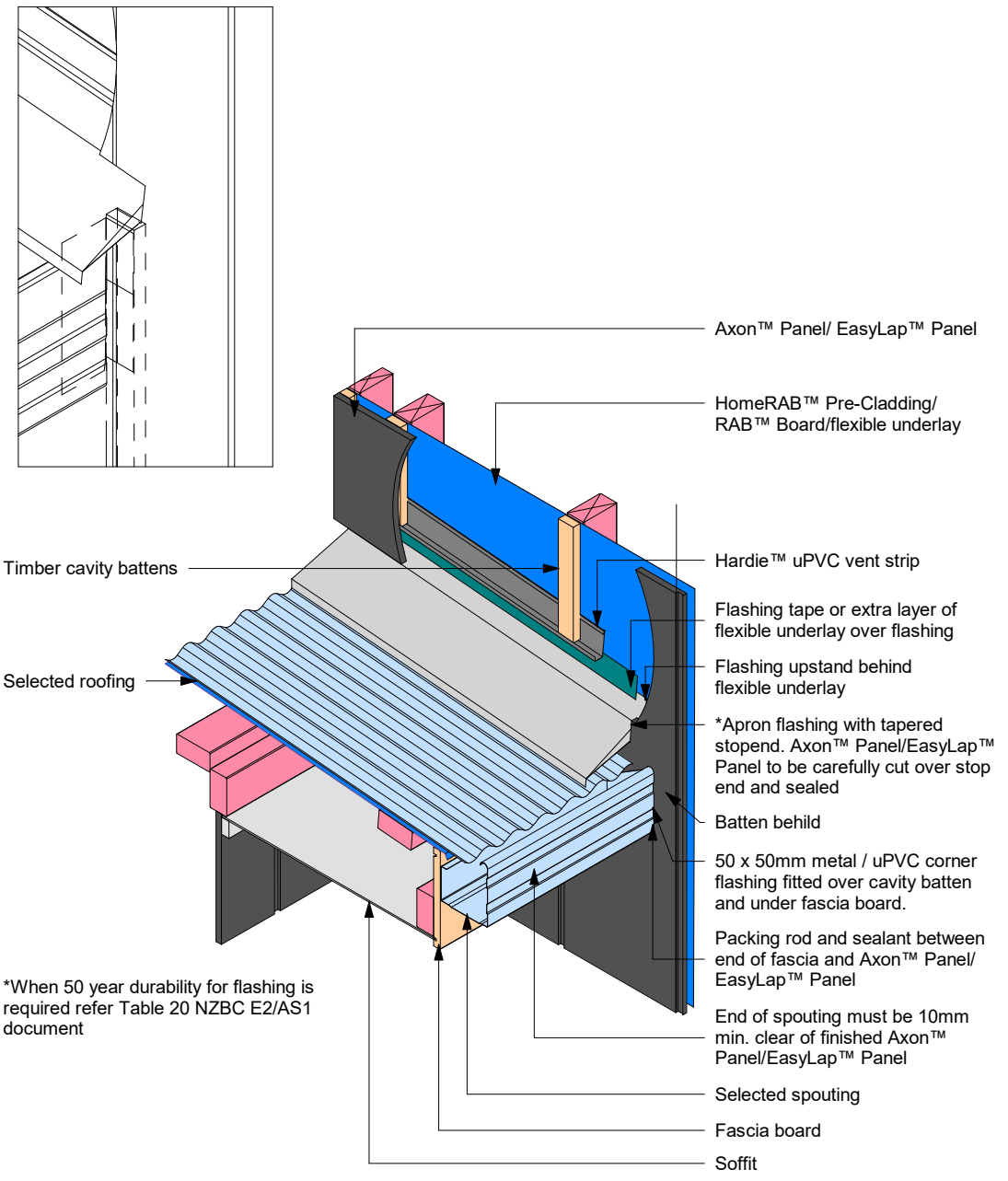

Note: Site cut edges to be primed

Axon™ Panel

Product Warranty

James Hardie New Zealand Limited ("James Hardie") warrants for a period of 15 years from the date of purchase that the Axon™ Panel (the "Product"), will be free from defects due to defective factory workmanship or materials and, subject to compliance with the conditions below, will be resistant to cracking, rotting, fire and damage from termite attacks to the extent set out in James Hardie's relevant published literature current at the time of installation. James Hardie warrants for a period of 15 years from the date of purchase that the accessories supplied by James Hardie will be free from defects due to defective factory workmanship or materials.

Nothing in this document shall exclude or modify any legal rights a customer may have under the Consumer Guarantees Act or otherwise which cannot be excluded or modified at law.

CONDITIONS OF WARRANTY:

The warranty is strictly subject to the following conditions:

a) James Hardie will not be liable for breach of warranty unless the claimant provides proof of purchase and makes a written claim either within 30 days after the defect would have become reasonably apparent or, if the defect was reasonably apparent prior to installation, then the claim must be made prior to installation.

b) This warranty is not transferable.

c) The Product must be installed and maintained strictly in accordance with the relevant James Hardie literature current at the time of installation and must be installed in conjunction with the components or products specified in the literature. Further, all other products, including coating and jointing systems, applied to or used in conjunction with the Product must be applied or installed and maintained strictly in accordance with the relevant manufacturer's instructions and good trade practice.

d) The project must be designed and constructed in strict compliance with all relevant provisions of the current New Zealand Building Code ("NZBC"), regulations and standards.

e) The claimant's sole remedy for breach of warranty is (at James Hardie's option) that James Hardie will either supply replacement product, rectify the affected product or pay for the cost of the replacement or rectification of the affected product.

f) James Hardie will not be liable for any losses or damages (whether direct or indirect) including property damage or personal injury, consequential loss, economic loss or loss of profits, arising in contract or negligence or howsoever arising. Without limiting the foregoing James Hardie will not be liable for any claims, damages or defects arising from or in any way attributable to poor workmanship, poor design or detailing, settlement or structural movement and/or movement of materials to which the Product is attached, incorrect design of the structure, acts of God including but not limited to earthquakes, cyclones, floods or other severe weather conditions or unusual climatic conditions, efflorescence or performance of paint/coatings applied to the Product, normal wear and tear, growth of mould, mildew, fungi, bacteria, or any organism on any Product surface or Product (whether on the exposed or unexposed surfaces).

g) All warranties, conditions, liabilities and obligations other than those specified in this warranty are excluded to the fullest extent allowed by law.

h) If meeting a claim under this warranty involves re-coating of Products, there may be slight colour differences between the original and replacement Products due to the effects of weathering and variations in materials over time.

Disclaimer: The recommendations in James Hardie's literature are based on good building practice, but are not an exhaustive statement of all relevant information and are subject to conditions (c), (d), (f) and (g) above. James Hardie has tested/assessed the performance of the Axon™ Panel when installed in accordance with the Axon™ Panel technical specification, in accordance with the standards and verification methods required by the NZBC and those test results demonstrate the product complies with the performance criteria established by the NZBC. However, as the successful performance of the relevant system depends on numerous factors outside the control of James Hardie (e.g. quality of workmanship and design) James Hardie shall not be liable for the recommendations made in its literature and the performance of the relevant system, including its suitability for any purpose or ability to satisfy the relevant provisions of the NZBC, regulations and standards, as it is the responsibility of the building designer to ensure that the details and recommendations provided in the relevant James Hardie installation manual are suitable for the intended project and that specific design is conducted where appropriate.

© 2022. James Hardie New Zealand Limited. TM and ® denotes a Trademark or Registered Mark owned by James Hardie Technology Limited.

KDC - Approved Building Consent Document - 210608 - Minor Variation for cladding change to Axon Board on Cavity - Pg 55 of 58 - 4/04/2022 - aaron.brown

EasyLap™ Panel

Product Warranty

James Hardie New Zealand Limited ("James Hardie") warrants for a period of 15 years from the date of purchase that the EasyLap™ Panel (the "Product"), will be free from defects due to defective factory workmanship or materials and, subject to compliance with the conditions below, will be resistant to cracking, rotting, fire and damage from termite attacks to the extent set out in James Hardie's relevant published literature current at the time of installation. James Hardie warrants for a period of 15 years from the date of purchase that the accessories supplied by James Hardie will be free from defects due to defective factory workmanship or materials.

Nothing in this document shall exclude or modify any legal rights a customer may have under the Consumer Guarantees Act or otherwise which cannot be excluded or modified at law.

CONDITIONS OF WARRANTY:

The warranty is strictly subject to the following conditions:

a) James Hardie will not be liable for breach of warranty unless the claimant provides proof of purchase and makes a written claim either within 30 days after the defect would have become reasonably apparent or, if the defect was reasonably apparent prior to installation, then the claim must be made prior to installation.

b) This warranty is not transferable.

c) The Product must be installed and maintained strictly in accordance with the relevant James Hardie literature current at the time of installation and must be installed in conjunction with the components or products specified in the literature. Further, all other products, including coating and jointing systems, applied to or used in conjunction with the Product must be applied or installed and maintained strictly in accordance with the relevant manufacturer's instructions and good trade practice.

d) The project must be designed and constructed in strict compliance with all relevant provisions of the current New Zealand Building Code ("NZBC"), regulations and standards.

e) The claimant's sole remedy for breach of warranty is (at James Hardie's option) that James Hardie will either supply replacement product, rectify the affected product or pay for the cost of the replacement or rectification of the affected product.

f) James Hardie will not be liable for any losses or damages (whether direct or indirect) including property damage or personal injury, consequential loss, economic loss or loss of profits, arising in contract or negligence or howsoever arising. Without limiting the foregoing James Hardie will not be liable for any claims, damages or defects arising from or in any way attributable to poor workmanship, poor design or detailing, settlement or structural movement and/or movement of materials to which the Product is attached, incorrect design of the structure, acts of God including but not limited to earthquakes, cyclones, floods or other severe weather conditions or unusual climatic conditions, efflorescence or performance of paint/coatings applied to the Product, normal wear and tear, growth of mould, mildew, fungi, bacteria, or any organism on any Product surface or Product (whether on the exposed or unexposed surfaces).

g) All warranties, conditions, liabilities and obligations other than those specified in this warranty are excluded to the fullest extent allowed by law.

h) If meeting a claim under this warranty involves re-coating of Products, there may be slight colour differences between the original and replacement Products due to the effects of weathering and variations in materials over time.

Disclaimer: The recommendations in James Hardie's literature are based on good building practice, but are not an exhaustive statement of all relevant information and are subject to conditions (c), (d), (f) and (g) above. James Hardie has tested/assessed the performance of the EasyLap™ Panel when installed in accordance with the EasyLap™ Panel technical specification, in accordance with the standards and verification methods required by the NZBC and those test results demonstrate the product complies with the performance criteria established by the NZBC. However, as the successful performance of the relevant system depends on numerous factors outside the control of James Hardie (e.g. quality of workmanship and design) James Hardie shall not be liable for the recommendations made in its literature and the performance of the relevant system, including its suitability for any purpose or ability to satisfy the relevant provisions of the NZBC, regulations and standards, as it is the responsibility of the building designer to ensure that the details and recommendations provided in the relevant James Hardie installation manual are suitable for the intended project and that specific design is conducted where appropriate.

© 2022. James Hardie New Zealand Limited. TM and ® denotes a Trademark or Registered Mark owned by James Hardie Technology Limited.

KDC - Approved Building Consent Document - 210608 - Minor Variation for cladding change to Axon Board on Cavity - Pg 56 of 58 - 4/04/2022 - aaron.brown

KDC - Approved Building Consent Document - 210608 - Minor Variation for cladding change to Axon Board on Cavity - Pg 57 of 58 - 4/04/2022 - aaron brown



JamesHardie™

Ask James Hardie™ | Call 0800 808 868 | jameshardie.co.nz

© 2022. James Hardie New Zealand Limited. TM and ® denotes a Trademark or Registered Mark owned by James Hardie Technology Limited.
Inseal®, Tyvek®, Protecto®, Thermakraft(TM) and Timbakote® are trademarks of their respective owners.

Product Technical Statement

Product Description: Axon™ Panel is a 9mm thick vertical grooved ship-lapped edge panel manufactured using low density fibre cement formulation.

Scope of Use: Axon Panel installed using CLD™ Structural Cavity Battens or timber cavity battens is suitable for use as external wall cladding in residential buildings within the scope of E2/AS1, or in residential/commercial buildings exposed to design wind pressure up to 2.5kPa (ULS) maximum covered by a specific engineering design (SED).

Axon Panel can also be installed direct to the framing (without cavity) for residential buildings within or up to the risk score 6 calculated as per Table-2 of E2/AS1. Axon Panel can also be used for external wall bracing applications in residential buildings as per NZS 3604.

Limitations: Axon Panel must not be installed horizontally or in curved wall applications or in situations where it stays in contact with ground moisture.

Compliance with NZBC: The following clauses of the NZBC are applicable to Axon Panel and it complies with these requirements as explained below;

Structure - B1: Uniform Distributed Load tests have been completed at a NATA accredited James Hardie laboratory.

Axon Panel installed as per its technical specifications is suitable for use up to design wind pressures of 2.5kPa and meets the requirements of Clause-B1.3.1, B1.3.2 and B1.3.3 of NZBC.

Axon™ Panels have been tested as per BRANZ P21 test method and are suitable for structural bracing.

Durability - B2**:** Axon Panel and CLD Structural Cavity Battens have been tested at a NATA accredited laboratory in accordance with AS/NZS 2908.2 and meets the durability performance requirements as per Clause B2.3.1(a) and B2.3.2 of NZBC.

Fire Performance - C: Axon Panel has been assessed and is classified as 'non-combustible' material and is suitable for use on external walls close to boundaries.

External Moisture - E2: Axon Panel has been tested as per the details published for weathertightness as per E2/VM1 (as contained within NZBC Clause E2).

Hazardous Building Materials - F2*:* Axon Panel complies with the requirements of F2.3.1 and will not present a health hazard when handled as per its technical specifications.

Energy Efficiency - H1: Axon Panel walls constructed using bulk insulation meets the construction R-Value requirements as per Table 1 of Clause H1.

Installation: Axon Panel must be installed in accordance with the current Axon Panel Technical Specification. The specification and details are available at James Hardie web site www.jameshardie.co.nz or Ask James Hardie™ at 0800 808 868 for further information.

Warranty: Axon Panel has a product warranty of 15 years when installed and maintained as per the current technical specification.

Copy right April 2019. © James Hardie New Zealand Limited. ™ and ® Denotes a trademark or registered trademark owned by James Hardie Technology Limited.

KDC - Approved Building Consent Document - 210608 - Minor Variation for cladding change to Axon Board on Cavity - Pg 58 of 58 - 4/04/2022 - aaron.brown

Form 7
Code compliance certificate

Section 95, Building Act 2004

The building

Street address of building:	752 Settlement Road, Hakaru
Legal description of land where building is located:	Lot 3 DP 560279
Building name:	N/A
Location of building within site/block number:	752 Settlement Road Hakaru
Level/unit number:	0
Current, lawfully established, use:	7.0.1 Outbuildings with 1 occupant
Year first constructed:	2021

The owner

Name of owner:	Gina Utting and Dawn Owens
Contact person:	Gina Utting
Mailing address:	752 Settlement Road, RD 5, Wellsford
Street address/registered office:	N/A
Phone number:	Landline: N/A Mobile: 0212670724
Daytime:	Landline: N/A Mobile: 0212670724
After hours:	Landline: N/A Mobile: 0212670724
Facsimile number:	No information provided
Email address:	ginautting@gmail.com
Website:	No information provided

First point of contact for communications with the council/building consent authority:
Russell Swain ; Mailing Address: 33 Aragon Avenue
Glendowie
Auckland 1071; Mobile: 0212519309; Email: russellswain@habitatdesign.co.nz

Building work

Building consent number:	BC210608
Description:	Proposed Separate Garage/Sleepout
Issued by:	Kaipara District Council

Code compliance

The building consent authority named below is satisfied, on reasonable grounds, that -
the building work complies with the building consent.



Signature: Graeme Mager
Position: Building Services Officer
On behalf of: Kaipara District Council
Date: 27 March 2023

Date Submitted: Monday, 27 March 2023

Form 6
Application for code compliance certificate

Section 92, Building Act 2004

The building consent

Building consent number:	BC210608
Issued by:	Kaipara District Council

Application

All building work to be carried out under the building consent specified on this form was completed on:
24 March 2023

The licensed building practitioner(s) who carried out or supervised the restricted building work is/are as follows:

Name	Russell Swain
Licensing class	Design
Licensed building practitioner number (or registration number if treated as being licensed under section 291 of Act)	BP113899
Particular work carried out or supervised	No information provided

The personnel who carried out building work other than restricted building work are as follows:

Name	Andrew Whitehead
Address	No information provided
Phone number	0211489814
Registration number	N/A
Licensed building practitioner number	N/A

Name	Patrick
Address	No information provided
Phone number	0212162605
Registration number	N/A
Licensed building practitioner number	N/A

Name	Gina Utting
Address	No information provided
Phone number	0212670724
Registration number	N/A
Licensed building practitioner number	N/A

Name	Ethan Clark
Address	No information provided
Phone number	02108318135
Registration number	N/A
Licensed building practitioner number	N/A

The following specified systems are contained on the compliance schedule for the building and, in the opinion of the personnel who installed them, are capable of performing to the performance standards set out in the building consent:

There are no specified systems in the building.

I request that you issue a code compliance certificate for this work under section 95 of the Building Act 2004.
The code compliance certificate should be sent to:

Owner:	752 Settlement Road, Hakaru 0975
Signature of owner:	
GINA UTTING	

Name of person signing:	Gina Utting
Date:	27 Mar 2023

Attachments

The following documents are attached to this application:

No attachments

Compliance and Electrical Safety Certificate
Unique ID: 5218.1/E243604

This form has been designed to be used by licensed electrical workers to certify that installations or Part installations under Part 1 or Part 2 of AS/NZS 3000 are safe to be connected to the specified system of electrical supply.

(1) Location of Installation or Part Installation

Address: 752 Settlement Road, RD 5, Hakaru, Wellsford 0975

(2) Customer / Occupier / Owner Information

Name: Gina Utting

Address: 752 Settlement Road, RD 5, Hakaru, Wellsford 0975

Email: ginautting@gmail.com Phone:

(3) Electrical Worker Information

Name: Carl Gordon Registration/Practising Licence No.: E243604

Organisation: Carl Gordon Electrical Ltd

Phone: 022 071 0245 Email: carl@cge.co.nz

Name of person(s) being supervised: Ben Leese

(4) Work Details

This work is: ☐ Is New Work ☑ Is Addition ☐ Is Alteration ☐ Is Maintenance

The prescribed electrical work is: ☐ Home Owner ☐ Low Risk ☑ General ☐ High Risk

Reference Standards: ☐ Part 1 of AS/NZS 3000 ☑ Part 2 of AS/NZS 3000 ☐ AS/NZS 3012

☐ Additional Standards

Indicate the number of each item installed or altered:

Lighting Outlets: 11 Socket Outlets: 11 Ranges: Water Heaters: 1

Work Done: Garage/sleeput electrical installation. Wire and install 11 light fittings, 11 double socket outlets, 2 socket outlets for garage doors, 1 extraction fan, 1 hot water cylinder. Install single phase sub main from house to garage with sub board in garage. Install RCD protection on all lighting and socket outlet circuits.

The work was done within the period: Date Commenced: 14/12/2022 Date Completed: 14/12/2022

(5) Certification of Work

I certify that the completed prescribed electrical work to which this certificate applies, has been done lawfully and safely and the information in the certificate is correct in that the installation, or part of the installation:

☑ Relies on manufacturer's instructions ☐ Attached/Ref

☑ Relies on Declaration of Conformity ☐ Attached/Ref

☐ Accordance with certified design ☐ Attached/Ref

Reference:

☑ Tested in accordance with ESR2010

☑ Earthing system that is correctly rated

☑ Fittings safe to connect

☑ Safe to connect to a power supply

Test Results	
Continuity of Earthing System:	
Insulation Resistance:	299+ M Ohm
Polarity – Correct Circuit Connections:	
Verification of Impedance:	
Bonding:	
Other:	

Signature: Date: 14/12/2022

(6) Electrical Safety Certificate

(to be completed by the person who connects the installation, or part installation to the power supply)

I certify that the installation, or part of the installation as described above, to which this Electrical Safety Certificate applies is connected to a power supply and is safe to use. If maintenance, alteration or addition, has not adversely affected any other part of the installation.

Name: Carl Gordon Registration/Practising Licence No: E243604

Signature: Issue Date: 14/12/2022 Connection Date: 14/12/2022

KAIPARA DISTRICT

Kaipara te Oranganui • Two Oceans Two Harbours

KAIPARA DISTRICT COUNCIL

Producer Statement Construction (PS3) - Plumbing

Issued by: Isaac Chan being a Registered Certifying Plumber.

In respect of the testing of water pipework prior to concealment for:

(Owner) Gina Utting

At (Address) 752 Settlement Road, Kaiwaka

Legal Description: Lot _____ DP_____ Valuation _____

I have sighted the issued building consent (BC 210608) and have constructed the plumbing pipes and fitting in accordance with the approved building consent, the New Zealand Building Code, and the manufacturers specifications and requirements.

I have tested the water supply system as follows:

☑ By pressurising the water supply system by subjecting the hot and cold system to a pressure of 1500kPa for a period of not less that 15 minutes and inspecting the system to ensure that there are no leaks, in accordance with NZBC G12/AS1 Clause 7.5.1

☐ By pressurising the UPVC water piping systems to 1.5 times the working pressure for a period not less than 15 minutes and checking that there are no leaks, as given in section 9 of NZS 7643, in accordance with NZBC G12/AS1 clause 7.5.2

I believe on reasonable grounds that the pipework has passed that test.

I also understand that Kaipara District Council in accepting this producer statement construction (PS3), will be relying on it to establish compliance at the completion of the building work.

☑ I understand and accept that Council may rely on this document, for the purposes of establishing compliance with the above building consent and that the content including the signature, whether electronic or not, is truly representative and authoritative of the information contained.

Signature of Registered Certifying Plumber: _____

Registration Number: 25718 Reg Expiry Date: 31/03/2023

Date: 019/09/2022

File: 3117.03







30 September 2021

Gina Utting
ginautting@gmail.com

RE: PS 4 for compaction of fill beneath proposed structure – Lot 3, DP 560279, 752 Settlement Road, Hakaru. Building Consent 210608

Wiley Geotechnical Limited (WGL) was requested by Gina Utting to visit the site and perform geotechnical site observations, compaction control and certification of engineered fill for a proposed new concrete slab foundation.

WGL visited the site on the 10th of September 2021. The compacted engineered fill (GAP 40) within the proposed building area was inspected.

Typical measured CBR values of 21 to 24 were achieved in the area of engineered fill as indicated by the Clegg Hammer and was considered appropriate. Test locations and their respective CBR values are illustrated in the Site Report attached to this letter.

All works are to be in general accordance with NZS4431 Code of Practice for Earthfill for Residential Development.

Conclusions and Recommendations

We consider the site to be suitable for the construction of the proposed structure.

The fill that has been placed appears to be in general accordance with NZS4431 “Code of Practice for Earthworks for Residential Development”.

Based on our testing, it is our opinion that a geotechnical ultimate bearing capacity of 300 kPa is available on the prepared engineered pad.

LIMITATIONS

(i) This report has been prepared for the use of our client, Gina Utting and their professional advisers and the relevant Regional Authorities in relation to the specified project brief described in this report. No liability is accepted for the use of any part of the report for any other purpose or by any other person or entity.

(ii) Assessments made in this report are based on the ground conditions indicated from published sources, site inspections and subsurface investigations described in this report based on accepted normal methods of site investigations. Variations in ground conditions may exist between test locations and therefore have not been taken into account in the report. If variations are found during excavation or at foundation preparation stage WGL should be notified immediately so we can amend our recommendations.

(iii) This Limitation should be read in conjunction with the IPENZ/ACENZ Standard Terms of Engagement.

We trust that this information meets your current requirements. Please do not hesitate to contact the undersigned on 021 0399 385 or matt@wileygeotechnical.co.nz if you require any further information.



Matt Wiley, CPEng

Principal Engineer

Attachments:

- PS 4 – Construction Review

- Site Notes

Building Code Clause(s) B1/VM4

PRODUCER STATEMENT – PS4 – CONSTRUCTION REVIEW

ISSUED BY: Wiley Geotechnical Ltd
(Construction Review Firm)

TO: Gina Utting
(Owner/Developer)

TO BE SUPPLIED TO: Kaipara District Council
(Building Consent Authority)

IN RESPECT OF: Compaction of Hard Fill beneath proposed structure.
(Description of Building Work)

AT: 752 Settlement Road
(Address)

Town/City: Mangawhai (Address) **LOT** 3 **DP** 560279 **SO**

We Wiley Geotechnical Ltd (Construction Review Firm) have been engaged by Gina Utting

To provide ☐ CM1 ■ CM2 ☐ CM3 ☐ CM4 ☐ CM5 (Engineering Categories) or ☐ observation as per agreement with owner/developer Gina Utting

or ☐ other ..... (Extent of Engagement) services

in respect of clause(s) B1 & B2 of the Building Code for the building work described in documents relating to Building Consent No. 210□ 0□ and those relating to Building Consent Amendment(s) Nos. ..... issued during the course of the works. We have sighted these Building Consents and the conditions of attached to them.

Authorised instructions/variations(s) No. ..... (copies attached) or by the attached Schedule ☐ have been issued during the course of the works.

On the basis of ☐ this review ■ these review(s) and information supplied by the contractor during the course of the works and **on behalf of the firm** undertaking this Construction Review, **I believe on reasonable grounds** that ☐ All or ■ Part only of the building works have been completed in accordance with the relevant requirements of the Building Consent and Building Consent Amendments identified above, with respect to Clause(s) B1/VM4 of the Building Code. I also believe on reasonable grounds that the persons who have undertaken this construction review have the necessary competency to do so.

I, Matthew Lewis Wiley (Name of Construction Review Professional) am: ■ CPEng.# 220767

I am a member of: ■ Engineering New Zealand and hold the following qualifications BSc, MSc (Honours)

The Construction Review Firm issuing this statement holds a current policy of Professional Indemnity Insurance no less than $200,000*.

The Construction Review Firm is a member of ACE New Zealand: ☐

SIGNED BY Matthew Lewis Wiley (Name of Construction Review Professional) (Signature) M Wiley

ON BEHALF OF Wiley Geotechnical Ltd (Construction Review Firm) Date 10 Sep 21

Note: This statement shall only be relied upon by the Building Consent Authority named above. Liability under this statement accrues to the Design Firm only. The total maximum amount of damages payable arising from this statement and all other statements provided to the Building Consent Authority in relation to this building work, whether in contract, tort or otherwise (including negligence), is limited to the sum of $200,000.*

This form is to accompany **Forms 6 or 8 of the Building (Form) Regulations 2004** for the issue of a Code Compliance Certificate.

THIS FORM AND ITS CONDITIONS ARE COPYRIGHT TO ACE NEW ZEALAND AND ENGINEERING NEW ZEALAND

GUIDANCE ON USE OF PRODUCER STATEMENTS

Producer statements were first introduced with the Building Act 1991. The producer statements were developed by a combined task committee consisting of members of the New Zealand Institute of Architects, Institution of Professional engineers New Zealand (now Engineering New Zealand), ACE New Zealand in consultation with the Building Officials Institute of New Zealand. The original suit of producer statements has been revised at the date of this form as a result of enactment of the Building Act (2004) by these organisations to ensure standard use within the industry.

The producer statement system is intended to provide Building Consent Authorities (BCAs) with reasonable grounds for the issue of a Building Consent or a Code Compliance Certificate, without having to duplicate design or construction checking undertaken by others.

PS1 Design Intended for use by a suitably qualified independent design professional in circumstances where the BCA accepts a producer statement for establishing reasonable grounds to issue a Building Consent;

PS2 Design Review Intended for use by a suitably qualified independent design professional where the BCA accepts an independent design professional's review as the basis for establishing reasonable grounds to issue a Building Consent;

PS3 Construction Forms commonly used as a certificate of completion of building work are Schedule 6 of NZS 3910:2013 or Schedules E1/E2 of NZIA's SCC 2011[2]

PS4 Construction Review Intended for use by a suitably qualified independent design professional who undertakes construction monitoring of the building works where the BCA requests a producer statement prior to issuing a Code Compliance Certificate.

This must be accompanied by a statement of completion of building work (Schedule 6).

The following guidelines are provided by ACE New Zealand and Engineering New Zealand to interpret the Producer Statement.

Competence of Design Professional

This statement is made by a Design Firm that has undertaken a contract of services for the services named, and is signed by a person authorised by that firm to verify the processes within the firm and competence of its designers.

A competent design professional will have a professional qualification and proven current competence through registration on a national competence based register, either as a Chartered Professional Engineer (CPEng) or a Registered Architect.

Membership of a professional body, such as Engineering New Zealand (formerly IPENZ), provides additional assurance of the designer's standing within the profession. If the design firm is a member of the ACE New Zealand, this provides additional assurance about the standing of the firm.

Persons or firms meeting these criteria satisfy the term "suitably qualified independent design professional".

*Professional Indemnity Insurance

As part of membership requirements, ACE New Zealand requires all member firms to hold Professional Indemnity Insurance to a minimum level.

The PI Insurance minimum stated on the front of this form reflects standard, small projects. If the parties deem this inappropriate for large projects the minimum may be up to $500,000.

Professional Services during Construction Phase

There are several levels of service which a Design Firm may provide during the construction phase of a project (CM1-CM5 for Engineers[3]). The Building Consent Authority is encouraged to require that the service to be provided by the Design Firm is appropriate for the project concerned.

Requirement to provide Producer Statement PS4

Building Consent Authorities should ensure that the applicant is aware of any requirement for producer statements for the construction phase of building work at the time the building consent is issued as no design professional should be expected to provide a producer statement unless such a requirement forms part of the Design firm's engagement.

Attached Particulars

Attached particulars referred to in this producer statement refer to supplementary information appended to the producer statement.

Refer Also:

1 Conditions of Contract for Building & Civil Engineering Construction NZS 3910: 2013

2 NZIA Standard Conditions of Contract SCC 2011

3 Guideline on the Briefing & Engagement for Consulting Engineering Services (ACE New Zealand/IPENZ 2004)

4 PN Guidelines on Producer Statements

www.acenz.org.nz
www.engineeringnz.org

Engineer's / Inspector's Report

WILEY GEOTECHNICAL

Project Name: 752 Settlement Rd, Maraetai
Project No.: 21150 Date: 10-9-21
Time arrived on site: Weather:
Time left site: hrs Contractor's Working Hours:
Travel time: hrs
Total time:

Final inspection of hardfill (LAP40/25)

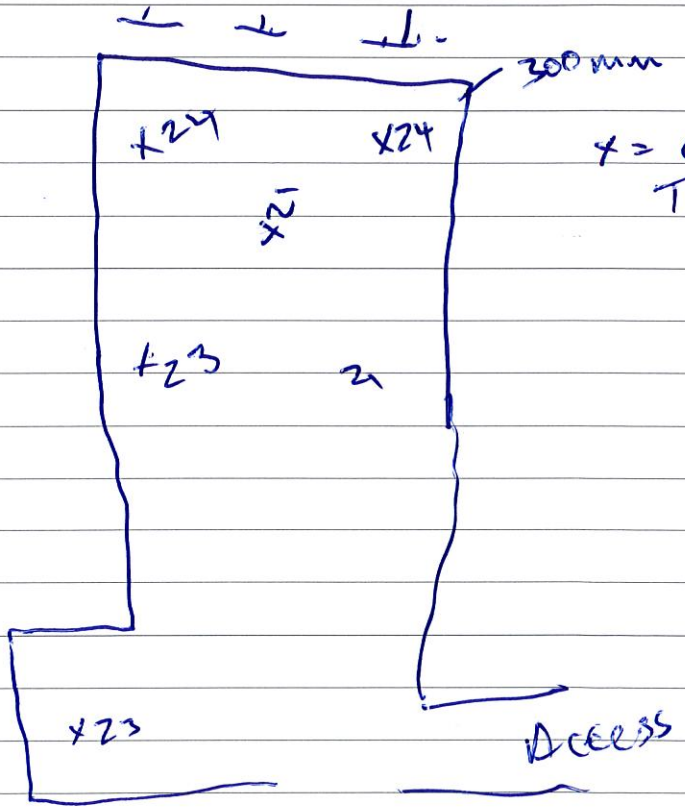

x = CBR Test
Target >15

All ok for 300 kPa ultimate bearing capacity

WCL to issue PS4 for ground bearing

Distribution	Initials

Engineer / Inspector: M Wiley
Reviewed by: CPENG 220767



KAIPARA DISTRICT
Kaipara Te Oranganui • The Oceans The Harbours

KAIPARA DISTRICT COUNCIL

Private Utility Service As-Built Record

(Section 216, Building Act 2004)

Part A Consent Details (to be completed in all cases)

Building Consent Number 210608 / 210456. Shed / House

Applicants Name G. Uttins

Applicants Mailing Address

Site Address 752 Settlement Road

Part B As Built Services Information (to be completed in relation to service provided, ticking each box as appropriate)

Wastewater - Pressure

(Pump Make/Model)_____

Connection Diameter		Pipe Material		Connection Type	
	40mm		uPVC		Public Utility Service Connection
	50mm		Vitrified Clay		Septic Tank
	80mm		Concrete		Other _____
	Other_____mm		Other _____		

Wastewater - Gravity

Connection Diameter		Pipe Material		Connection Type	
	65mm	✓	uPVC		Public Utility Service Connection
	80mm		Vitrified Clay		Soak Hole
✓	100mm		Concrete		Stream
	Other_____mm		Other _____	✓	Other onsite

Wastewater - Disposal System Description

Septic Tank

Size: 3200 litres

Type
- [ ] Septic tank DECOMMISSIONED
- [ ] Ecotank
- [✓] Biocycle

Effluent Field

Trench 450 m

- [ ] Deep Soakhole
  - Depth _____ m
  - Number of holes _____ m
- [✓] Other Raam dripline

Sanitary Facilities

- [✓] Toilet Number 1
- [ ] Bidet Number _____
- [ ] Urinal Number _____

Waste Disposal Unit

- [✓] No
- [ ] Yes Type _____

Certification

I Mark Wrate being

- [ ] Owner
- [ ] Occupier
- [ ] Craftsman plumber
- [✓] Registered drainlayer

Registration Number _____

Registration Number ITR1

certify that this Private Utility Service As-Built Record is an accurate representation of the work carried out.

Signature _____ Date 3/21.

Stormwater

Pipe Diameter		Pipe Material		Connection Type	
	80mm	✓	uPVC		Public Utility Service Connection
✓	100mm		Vitrified Clay	✓	Soak Hole - 15 m.
	150mm		Ductile Iron		Stream
	225mm		Concrete		Drain
	Other_____mm		Other_____	✓	Other c/tank x2

Water Supply

Pipe Material - Cold

- [ ] uPVC
- [ ] Copper
- [ ] Polybutylene
- [ ] Other _____

Hot Water Cylinder

- [ ] High Pressure _____ Litre
- [ ] Low Pressure _____ Litre

Meter Type

Make _____ Model _____

Pipe Material - Hot

- [ ] uPVC
- [ ] Copper
- [ ] Polybutylene
- [ ] Other _____

Diameter _____

Serial Number _____

Reading _____ m^3

(Quote all black figures inclusive of zeros only)

Note Part B As Built Services Information

PART C: As Built Services Plan

(To be completed in all cases. If details are already noted on separate drawings then provide copies in duplicate as appropriate and attach to this sheet. Ensure that drawing numbers, etc, are noted below.)

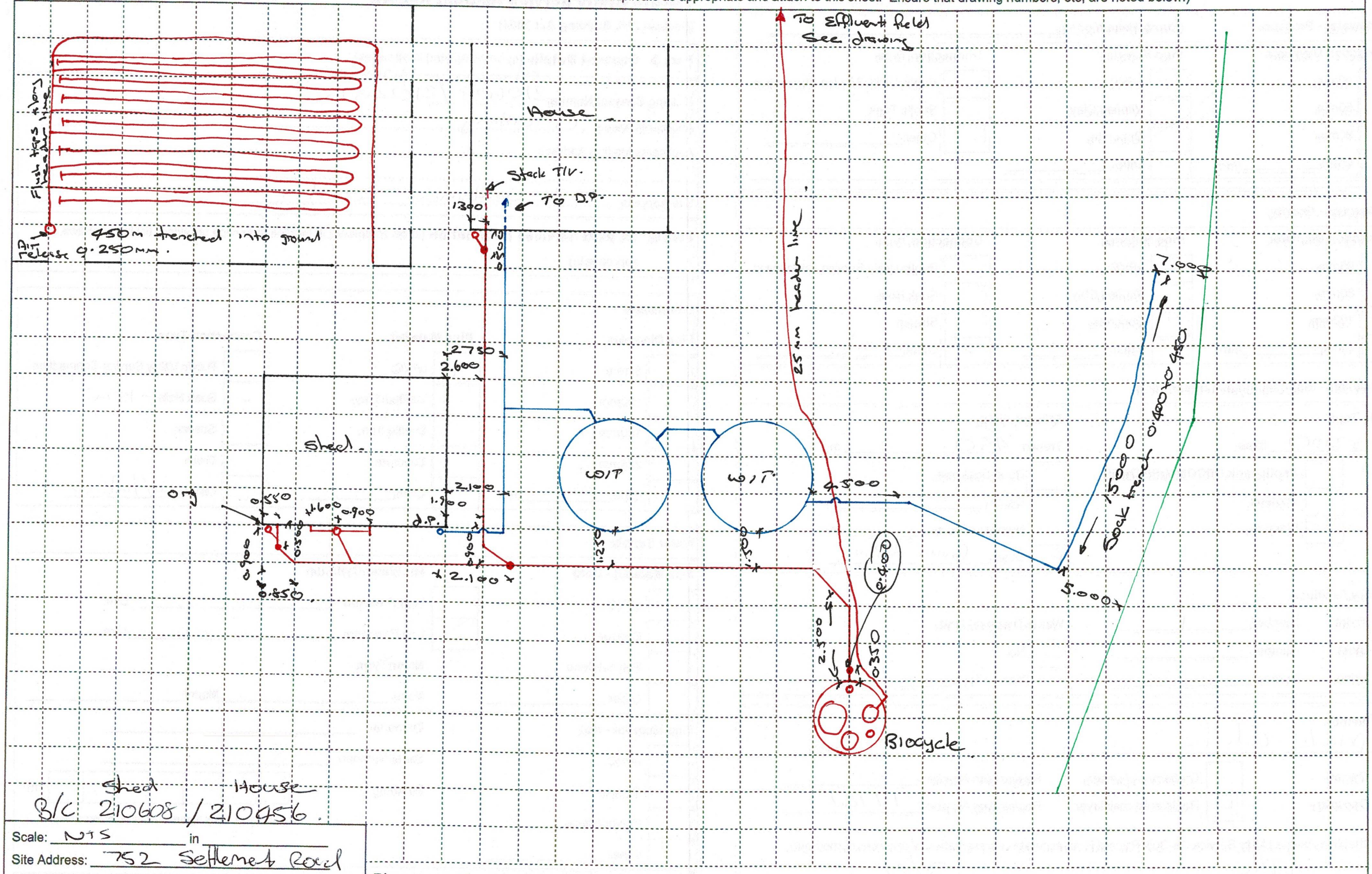

Scale: NTS in

Site Address: 752 Settlement Road

Please provide at least two measurements for each access point for future location

WILEY GEOTECHNICAL

30 September 2021

Gina Utting
ginautting@gmail.com

RE: PS 4 for compaction of fill beneath proposed dwelling – Lot 3, DP 560279, 752 Settlement Road, Hakaru. Building Consent

Wiley Geotechnical Limited (WGL) was requested by Gina Utting to visit the site and perform geotechnical site observations, compaction control and certification of engineered fill for a proposed new concrete slab foundation.

WGL visited the site on the 10th of September 2021. The compacted engineered fill (GAP 40) within the proposed building area was inspected.

Typical measured CBR values of 21 to 24 were achieved in the area of engineered fill as indicated by the Clegg Hammer and was considered appropriate. Test locations and their respective CBR values are illustrated in the Site Report attached to this letter.

All works are to be in general accordance with NZS4431 Code of Practice for Earthfill for Residential Development.

Conclusions and Recommendations

We consider the site to be suitable for the construction of the proposed dwelling.

The fill that has been placed appears to be in general accordance with NZS4431 “Code of Practice for Earthworks for Residential Development”.

Based on our testing, it is our opinion that a geotechnical ultimate bearing capacity of 300 kPa is available on the prepared engineered pad.

LIMITATIONS

(i) This report has been prepared for the use of our client, Gina Utting and their professional advisers and the relevant Regional Authorities in relation to the specified project brief described in this report. No liability is accepted for the use of any part of the report for any other purpose or by any other person or entity.

(ii) Assessments made in this report are based on the ground conditions indicated from published sources, site inspections and subsurface investigations described in this report based on accepted normal methods of site investigations. Variations in ground conditions may exist between test locations and therefore have not been taken into account in the report. If variations are found during excavation or at foundation preparation stage WGL should be notified immediately so we can amend our recommendations.

(iii) This Limitation should be read in conjunction with the IPENZ/ACENZ Standard Terms of Engagement.

We trust that this information meets your current requirements. Please do not hesitate to contact the undersigned on 021 0399 385 or matt@wileygeotechnical.co.nz if you require any further information.



Matt Wiley, CPEng

Principal Engineer

Attachments:

- PS 4 – Construction Review

- Site Notes

engineering new zealand

ace new zealand

association of consulting and engineering

Building Code Clause(s) B1/VM4

PRODUCER STATEMENT – PS4 – CONSTRUCTION REVIEW

ISSUED BY: Wiley Geotechnical Ltd
(Construction Review Firm)

TO: Gina Utting
(Owner/Developer)

TO BE SUPPLIED TO: Kaipara District Council
(Building Consent Authority)

IN RESPECT OF: Compaction of Hard Fill beneath proposed dwelling.
(Description of Building Work)

AT: 752 Settlement Road
(Address)

Town/City: Mangawhai (Address) **LOT** 3 **DP** 560279 **SO**

We Wiley Geotechnical Ltd (Construction Review Firm) have been engaged by Gina Utting

To provide ☐ CM1 ■ CM2 ☐ CM3 ☐ CM4 ☐ CM5 (Engineering Categories) or ☐ observation as per agreement with owner/developer Gina Utting

or ☐ other ..... (Extent of Engagement) services

in respect of clause(s) B1 & B2 of the Building Code for the building work described in documents relating to Building Consent No. ..... and those relating to Building Consent Amendment(s) Nos. ..... issued during the course of the works. We have sighted these Building Consents and the conditions of attached to them.

Authorised instructions/variations(s) No. ..... (copies attached) or by the attached Schedule ☐ have been issued during the course of the works.

On the basis of ☐ this review ■ these review(s) and information supplied by the contractor during the course of the works and **on behalf of the firm** undertaking this Construction Review, **I believe on reasonable grounds** that ☐ All or ■ Part only of the building works have been completed in accordance with the relevant requirements of the Building Consent and Building Consent Amendments identified above, with respect to Clause(s) B1/VM4 of the Building Code. I also believe on reasonable grounds that the persons who have undertaken this construction review have the necessary competency to do so.

I, Matthew Lewis Wiley (Name of Construction Review Professional) am: ■ CPEng.# 220767

I am a member of: ■ Engineering New Zealand and hold the following qualifications BSc, MSc (Honours)

The Construction Review Firm issuing this statement holds a current policy of Professional Indemnity Insurance no less than $200,000*.

The Construction Review Firm is a member of ACE New Zealand: ☐

SIGNED BY Matthew Lewis Wiley (Name of Construction Review Professional) (Signature) M Wiley

ON BEHALF OF Wiley Geotechnical Ltd (Construction Review Firm) Date 10 Sep 21

Note: This statement shall only be relied upon by the Building Consent Authority named above. Liability under this statement accrues to the Design Firm only. The total maximum amount of damages payable arising from this statement and all other statements provided to the Building Consent Authority in relation to this building work, whether in contract, tort or otherwise (including negligence), is limited to the sum of $200,000.*

This form is to accompany **Forms 6 or 8 of the Building (Form) Regulations 2004** for the issue of a Code Compliance Certificate.

THIS FORM AND ITS CONDITIONS ARE COPYRIGHT TO ACE NEW ZEALAND AND ENGINEERING NEW ZEALAND

GUIDANCE ON USE OF PRODUCER STATEMENTS

Producer statements were first introduced with the Building Act 1991. The producer statements were developed by a combined task committee consisting of members of the New Zealand Institute of Architects, Institution of Professional engineers New Zealand (now Engineering New Zealand), ACE New Zealand in consultation with the Building Officials Institute of New Zealand. The original suit of producer statements has been revised at the date of this form as a result of enactment of the Building Act (2004) by these organisations to ensure standard use within the industry.

The producer statement system is intended to provide Building Consent Authorities (BCAs) with reasonable grounds for the issue of a Building Consent or a Code Compliance Certificate, without having to duplicate design or construction checking undertaken by others.

PS1 Design Intended for use by a suitably qualified independent design professional in circumstances where the BCA accepts a producer statement for establishing reasonable grounds to issue a Building Consent;

PS2 Design Review Intended for use by a suitably qualified independent design professional where the BCA accepts an independent design professional's review as the basis for establishing reasonable grounds to issue a Building Consent;

PS3 Construction Forms commonly used as a certificate of completion of building work are Schedule 6 of NZS 3910:2013 or Schedules E1/E2 of NZIA's SCC 2011[2]

PS4 Construction Review Intended for use by a suitably qualified independent design professional who undertakes construction monitoring of the building works where the BCA requests a producer statement prior to issuing a Code Compliance Certificate.

This must be accompanied by a statement of completion of building work (Schedule 6).

The following guidelines are provided by ACE New Zealand and Engineering New Zealand to interpret the Producer Statement.

Competence of Design Professional

This statement is made by a Design Firm that has undertaken a contract of services for the services named, and is signed by a person authorised by that firm to verify the processes within the firm and competence of its designers.

A competent design professional will have a professional qualification and proven current competence through registration on a national competence based register, either as a Chartered Professional Engineer (CPEng) or a Registered Architect.

Membership of a professional body, such as Engineering New Zealand (formerly IPENZ), provides additional assurance of the designer's standing within the profession. If the design firm is a member of the ACE New Zealand, this provides additional assurance about the standing of the firm.

Persons or firms meeting these criteria satisfy the term "suitably qualified independent design professional".

*Professional Indemnity Insurance

As part of membership requirements, ACE New Zealand requires all member firms to hold Professional Indemnity Insurance to a minimum level.

The PI Insurance minimum stated on the front of this form reflects standard, small projects. If the parties deem this inappropriate for large projects the minimum may be up to $500,000.

Professional Services during Construction Phase

There are several levels of service which a Design Firm may provide during the construction phase of a project (CM1-CM5 for Engineers[3]). The Building Consent Authority is encouraged to require that the service to be provided by the Design Firm is appropriate for the project concerned.

Requirement to provide Producer Statement PS4

Building Consent Authorities should ensure that the applicant is aware of any requirement for producer statements for the construction phase of building work at the time the building consent is issued as no design professional should be expected to provide a producer statement unless such a requirement forms part of the Design firm's engagement.

Attached Particulars

Attached particulars referred to in this producer statement refer to supplementary information appended to the producer statement.

Refer Also:

1 Conditions of Contract for Building & Civil Engineering Construction NZS 3910: 2013

2 NZIA Standard Conditions of Contract SCC 2011

3 Guideline on the Briefing & Engagement for Consulting Engineering Services (ACE New Zealand/IPENZ 2004)

4 PN Guidelines on Producer Statements

www.acenz.org.nz
www.engineeringnz.org

Engineer's / Inspector's Report

WILEY GEOTECHNICAL

Project Name: 752 Settlement Rd, Mangawhai
Project No.: 21150
Date: 10-9-21
Time arrived on site:
Weather:
Time left site: hrs
Contractor's Working Hours:
Travel time: hrs
Total time:

Final inspection of hardfill (GAP40/25)

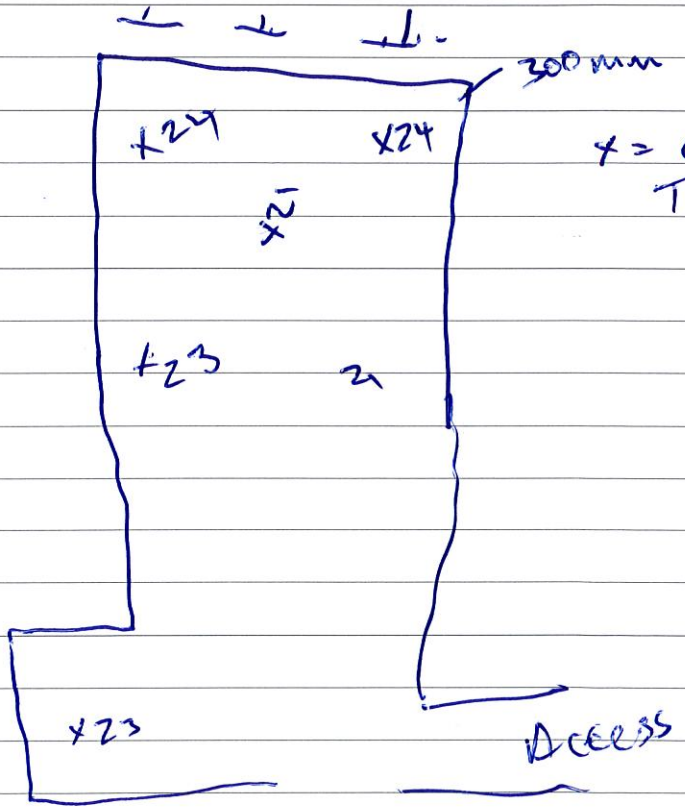

x = CBR Test
Target >15

All ok for 300 kPa ultimate bearing capacity

WGL to issue DS4 for ground bearing

Distribution	Initials

Engineer / Inspector:
Reviewed by: MWiley
CPENG 220767

KAIPARA DISTRICT

Kaipara te Oranganui • Two Oceans Two Harbours

KAIPARA DISTRICT COUNCIL

Producer Statement Construction (PS3) - Plumbing

Issued by: Isaac Chan being a Registered Certifying Plumber.

In respect of the testing of water pipework prior to concealment for:

(Owner) Gina Utting

At (Address) 752 Settlement Road, Kaiwaka

Legal Description: Lot _____ DP_____ Valuation _____

I have sighted the issued building consent (BC 210608) and have constructed the plumbing pipes and fitting in accordance with the approved building consent, the New Zealand Building Code, and the manufacturers specifications and requirements.

I have tested the water supply system as follows:

☑ By pressurising the water supply system by subjecting the hot and cold system to a pressure of 1500kPa for a period of not less that 15 minutes and inspecting the system to ensure that there are no leaks, in accordance with NZBC G12/AS1 Clause 7.5.1

☐ By pressurising the UPVC water piping systems to 1.5 times the working pressure for a period not less than 15 minutes and checking that there are no leaks, as given in section 9 of NZS 7643, in accordance with NZBC G12/AS1 clause 7.5.2

I believe on reasonable grounds that the pipework has passed that test.

I also understand that Kaipara District Council in accepting this producer statement construction (PS3), will be relying on it to establish compliance at the completion of the building work.

☑ I understand and accept that Council may rely on this document, for the purposes of establishing compliance with the above building consent and that the content including the signature, whether electronic or not, is truly representative and authoritative of the information contained.

Signature of Registered Certifying Plumber: _____

Registration Number: 25718 Reg Expiry Date: 31/03/2023

Date: 019/09/2022

File: 3117.03


WARNING: HIGH VOLTAGE
DISCONNECT POWER BEFORE
REMOVING THIS COVER








HOT CHILI PEPPERS REUNION



Compliance and Electrical Safety Certificate
Unique ID: 5218.1/E243604

This form has been designed to be used by licensed electrical workers to certify that installations or Part installations under Part 1 or Part 2 of AS/NZS 3000 are safe to be connected to the specified system of electrical supply.

(1) Location of Installation or Part Installation

Address: 752 Settlement Road, RD 5, Hakaru, Wellsford 0975

(2) Customer / Occupier / Owner Information

Name: Gina Utting

Address: 752 Settlement Road, RD 5, Hakaru, Wellsford 0975

Email: ginautting@gmail.com Phone:

(3) Electrical Worker Information

Name: Carl Gordon Registration/Practising Licence No.: E243604

Organisation: Carl Gordon Electrical Ltd

Phone: 022 071 0245 Email: carl@cge.co.nz

Name of person(s) being supervised: Ben Leese

(4) Work Details

This work is: ☐ Is New Work ☑ Is Addition ☐ Is Alteration ☐ Is Maintenance

The prescribed electrical work is: ☐ Home Owner ☐ Low Risk ☑ General ☐ High Risk

Reference Standards: ☐ Part 1 of AS/NZS 3000 ☑ Part 2 of AS/NZS 3000 ☐ AS/NZS 3012

☐ Additional Standards

Indicate the number of each item installed or altered:

Lighting Outlets: 11 Socket Outlets: 11 Ranges: Water Heaters: 1

Work Done: Garage/sleeput electrical installation. Wire and install 11 light fittings, 11 double socket outlets, 2 socket outlets for garage doors, 1 extraction fan, 1 hot water cylinder. Install single phase sub main from house to garage with sub board in garage. Install RCD protection on all lighting and socket outlet circuits.

The work was done within the period: Date Commenced: 14/12/2022 Date Completed: 14/12/2022

(5) Certification of Work

I certify that the completed prescribed electrical work to which this certificate applies, has been done lawfully and safely and the information in the certificate is correct in that the installation, or part of the installation:

☑ Relies on manufacturer's instructions ☐ Attached/Ref

☑ Relies on Declaration of Conformity ☐ Attached/Ref

☐ Accordance with certified design ☐ Attached/Ref

Reference:

☑ Tested in accordance with ESR2010

☑ Earthing system that is correctly rated

☑ Fittings safe to connect

☑ Safe to connect to a power supply

Test Results	
Continuity of Earthing System:	
Insulation Resistance:	299+ M Ohm
Polarity – Correct Circuit Connections:	
Verification of Impedance:	
Bonding:	
Other:	

Signature: Date: 14/12/2022

(6) Electrical Safety Certificate

(to be completed by the person who connects the installation, or part installation to the power supply)

I certify that the installation, or part of the installation as described above, to which this Electrical Safety Certificate applies is connected to a power supply and is safe to use. If maintenance, alteration or addition, has not adversely affected any other part of the installation.

Name: Carl Gordon Registration/Practising Licence No: E243604

Signature: Issue Date: 14/12/2022 Connection Date: 14/12/2022





Date Submitted: Monday, 27 March 2023

Form 6
Application for code compliance certificate

Section 92, Building Act 2004

The building consent

Building consent number:	BC210608
Issued by:	Kaipara District Council

Application

All building work to be carried out under the building consent specified on this form was completed on:
24 March 2023

The licensed building practitioner(s) who carried out or supervised the restricted building work is/are as follows:

Name	Russell Swain
Licensing class	Design
Licensed building practitioner number (or registration number if treated as being licensed under section 291 of Act)	BP113899
Particular work carried out or supervised	No information provided

The personnel who carried out building work other than restricted building work are as follows:

Name	Andrew Whitehead
Address	No information provided
Phone number	0211489814
Registration number	N/A
Licensed building practitioner number	N/A

Name	Patrick
Address	No information provided
Phone number	0212162605
Registration number	N/A
Licensed building practitioner number	N/A

Name	Gina Utting
Address	No information provided
Phone number	0212670724
Registration number	N/A
Licensed building practitioner number	N/A

Name	Ethan Clark
Address	No information provided
Phone number	02108318135
Registration number	N/A
Licensed building practitioner number	N/A

The following specified systems are contained on the compliance schedule for the building and, in the opinion of the personnel who installed them, are capable of performing to the performance standards set out in the building consent:

There are no specified systems in the building.

I request that you issue a code compliance certificate for this work under section 95 of the Building Act 2004.
The code compliance certificate should be sent to:

Owner:	752 Settlement Road, Hakaru 0975
Signature of owner:	
GINA UTTING	

Name of person signing:	Gina Utting
Date:	27 Mar 2023

Attachments

The following documents are attached to this application:

No attachments

Form 7
Code compliance certificate

Section 95, Building Act 2004

The building

Street address of building:	752 Settlement Road, Hakaru
Legal description of land where building is located:	Lot 3 DP 560279
Building name:	N/A
Location of building within site/block number:	752 Settlement Road Hakaru
Level/unit number:	0
Current, lawfully established, use:	7.0.1 Outbuildings with 1 occupant
Year first constructed:	2021

The owner

Name of owner:	Gina Utting and Dawn Owens
Contact person:	Gina Utting
Mailing address:	752 Settlement Road, RD 5, Wellsford
Street address/registered office:	N/A
Phone number:	Landline: N/A Mobile: 0212670724
Daytime:	Landline: N/A Mobile: 0212670724
After hours:	Landline: N/A Mobile: 0212670724
Facsimile number:	No information provided
Email address:	ginautting@gmail.com
Website:	No information provided

First point of contact for communications with the council/building consent authority:
Russell Swain ; Mailing Address: 33 Aragon Avenue
Glendowie
Auckland 1071; Mobile: 0212519309; Email: russellswain@habitatdesign.co.nz

Building work

Building consent number:	BC210608
Description:	Proposed Separate Garage/Sleepout
Issued by:	Kaipara District Council

Code compliance

The building consent authority named below is satisfied, on reasonable grounds, that -
the building work complies with the building consent.



Signature: Graeme Mager
Position: Building Services Officer
On behalf of: Kaipara District Council
Date: 27 March 2023

Email #51734: BC210608

Project ID: 210608
Date Received: 2021-09-09 14:15:02
Sender: russellswain@habitatdesign.co.nz
Checked By: Fay Fergus
Accepted By: Fay Fergus
Subject:
Information Received Via Email: Re: BC210608: 752 Settlement Road Hakaru
Message:
Thanks Fay,
Do you know if any further information will be requested ?
Kind Regards
Russell Swain

On Thu, Sep 9, 2021 at 1:06 PM Kaipara District Council <
210608@kdc.abcs.co.nz> wrote:

> Hello
>
> Thank you for your Building Consent application. Attached is the invoice
> for BC210608. Please use BC210608 as reference when making payment.
>
> Your application is being checked for completeness and will not be
> formally accepted until payment and any requested information has been
> received.
>
> Please be aware that further charges for specialist input may apply if
> applicable. For example: Engineering calculations or structural engineering
> design (SED)
> requires review by KDC contracting engineers since no processing officer
> is qualified to assess engineering calculations. This is the situation and
> practice of
> many smaller Councils across the country. Simple SED (e.g. "SED beam, raft
> or waffle slab, etc") are able to be processed in-house.
>
> If you require any further assistance, please do not hesitate to contact
> me.
>
> Kind Regards
>
>

>
> Fay Fergus
> Building Technical Support
> Kaipara District Council
> Unit 6 - The Hub, 6 Molesworth Drive, Mangawhai 0505
> P: (09) 439 3123 | E: buildingsupport@kaipara.govt.nz | W:
> www.kaipara.govt.nz
> ---
> *ATTACHMENTS:*
>
> - BC210608 - Invoice 67536.pdf
> <https://kdc.abcs.co.nz/a2/public/download/cd4f1d4a-71cb-37a9-aedf-5926caee6e32>
>
>
> ---
> *DISCLAIMER*
> This message is for the designated recipient(s) only, and may contain
> confidential and/or privileged information. If you have received it in
> error, please delete it and advise the sender immediately. You should not
> copy or use it for any other purpose, nor disclose its contents to any
> other person.
>
> Designated Recipient(s): russellswain@habitatdesign.co.nz
> Sent From: AlphaOne Building Consent System
> Sent Date: 9 September 2021 13:06:03 pm - Thursday

Email #51807: BC210608

Project ID: 210608
Date Received: 2021-09-13 15:15:09
Sender: russellswain@habitatdesign.co.nz
Checked By: Fay Fergus
Accepted By: Fay Fergus
Subject:

Information Received Via Email: Re: BC210608.1 Request For Further Information - Vetting - 752 Settlement Road Hakaru

Message:

Hello Fay,
Thank you for your email. The $2748.75 deposit/fee has been paid online.
Please refer attached for:

- Certificate of Title with Consent Notice.
- Floor Plan/Sheet 3 of attached set noting smoke alarm "S"
- Floor Plan/sheet 3 noting hwc and restraint detail.
- H1 Compliance by Schedule Method. Please refer to the calculation attached.

Please note I have amended sheet 3 noting the hwc and restraint detail and this full set is the most up to date for the application.

Any further queries please dont hesitate to contact me.
Kind Regards
Russell Swain

On Thu, Sep 9, 2021 at 3:08 PM Kaipara District Council <
210608@kdc.abcs.co.nz> wrote:

> Hello Russell
>
>
> Reference Number: BC210608
> Project Location: 752 Settlement Road, Hakaru
> Project Description: Proposed Separate Garage/Sleepout
>
> Thank you for lodging your building consent application with the Kaipara
> District Council, the application has been reviewed for completeness in
> accordance with s45 of the Act. The attached letter details information
> which is required to be provided to enable your application to be formally

> receipted.
>
> All information is to be supplied within 28 days (or the application may
> be refused). Please keep us informed if additional time is required.
>
> So that your information gets to us as promptly as possible, please:
>
> - ensure you reply directly to this email;
> - only provide information specifically relating to this project;
> - all attachments must be saved in PDF format;
>
> By doing this you will keep your project moving as the information will be
> delivered directly to the processor. To speed up processing we would
> request that changes to plans are marked using the "cloud" convention -
> thank you for helping us to help you!
>
> If you do not receive the automated reply confirmation from Kaipara
> District Council for the info sent then Kaipara District Council has not
> received your information.
>
> Kind Regards
>
>
>
> Fay Fergus
> Building Technical Support
> Kaipara District Council
> Unit 6 - The Hub, 6 Molesworth Drive, Mangawhai 0505
> P: (09) 439 3123 | E: buildingsupport@kaipara.govt.nz | W:
> www.kaipara.govt.nz
>
>
> ----------
>
> *DISCLAIMER*
>
>
> This message is for the designated recipient(s) only, and may contain
> confidential and/or privileged information.
> If you have received it in error, please delete it and advise the sender
> immediately.
> You should not copy or use it for any other purpose, nor disclose its
> contents to any other person.
>

>

> Designated Recipient(s): russellswain@habitatdesign.co.nz

>

> Sent From: AlphaOne Building Consent System

>

> Sent Date: 9 September 2021 15:08 - Thursday

>

>

ATTACHMENTS:

- 210456_CT_20210706.pdf

- BC Dwgs for Utting Owens.PDF

- H1 calculation. GUtting.PDF

Email #51917: BC210608

Project ID: 210608
Date Received: 2021-09-16 15:40:07
Sender: russellswain@habitatdesign.co.nz
Checked By: Matthew Bayly
Accepted By: Matthew Bayly
Subject:
Information Received Via Email: Re: BC210608.1 Form 4: Certificate attached to PIM - 752 Settlement Road Hakaru
Message:
Hello Matthew,
My apologies please find attached the floor plan and site plan where the
sink has been deleted.
Kind Regards
Russell Swain

On Wed, Sep 15, 2021 at 2:31 PM Kaipara District Council <
210608@kdc.abcs.co.nz> wrote:

> Hi,
>
> Please see attached a Form 4 for this project.
>
>
> Reference Number: BC210608.1
>
> Form 4: Certificate attached to PIM
>
>
> Matthew Bayly
> Planning Team
> Kaipara District Council
> Unit 6 - The Hub, 6 Molesworth Drive, Mangawhai 0505
> P: (09) 439 3123 | E: buildingsupport@kaipara.govt.nz | W:
> www.kaipara.govt.nz
>
>
> ----------
>
> *DISCLAIMER*
>
>

> This message is for the designated recipient(s) only, and may contain
> confidential and/or privileged information.
> If you have received it in error, please delete it and advise the sender
> immediately.
> You should not copy or use it for any other purpose, nor disclose its
> contents to any other person.
>
>
> Designated Recipient(s): russellswain@habitatdesign.co.nz
>
> Sent From: AlphaOne Building Consent System
>
> Sent Date: 15 September 2021 14:31 - Wednesday
>
>

ATTACHMENTS:

- Temp00744.PDF

Email #52182: BC210608

Project ID: 210608
Date Received: 2021-09-28 13:25:03
Sender: russellswain@habitatdesign.co.nz
Checked By: Vikrant Singh
Accepted By: Vikrant Singh
Subject:

Information Received Via Email: BC210608 , 752 Settlement Road, Hakaru

Message:

Hello Vikrant,

Please refer below and two plans attached for response to your RFI dated 24/9/21.

Site Considerations: Please refer to Site Plan/Sht 1 noting wind , earthquake and corrosion zones.

*E3: Internal Moisture: *Please refer to internal waterproofing details/sht 3 attached.

*G12 Water Supply: *The water supply, as is the main household, is provided by the 2/25,000 litre water tanks. Please also refer to the attached hwc specification.

*G13 Foul Water: *Please refer to Site Plan/sht 1 for hwc drain noted.

I trust all is to your satisfaction.

Any queries please dont hesitate to contact me.

Kind Regards

Russell Swain

ATTACHMENTS:

- 752 Settlement Rd.28.9.21.PDF
- Rheem HWC.pdf

Email #52261: BC210608

Project ID: 210608
Date Received: 2021-09-30 14:25:04
Sender: buildingsupport@kaipara.govt.nz
Checked By: John Dowden
Accepted By: John Dowden
Subject:
Information Received Via Email: FW: BC210608 Producer Statement - PS4_Lot 3, 760 Settlement Road, Hakarua.pdf
Message:

From: Gina Utting <ginautting@kaipara.govt.nz>
Sent: Thursday, 30 September 2021 1:26 PM
To: Building Support <buildingsupport@kaipara.govt.nz>
Subject: BC210608 Producer Statement - PS4_Lot 3, 760 Settlement Road, Hakarua.pdf

Please find attached a producer statement for this building consent, thanks.

Regards

[KDC Logo test June 2015]
Gina Utting | Compliance and Monitoring Services Technical Support
Kaipara District Council, Private Bag 1001, Dargaville 0340
Direct Dial 09 439 1123
gutting@kaipara.govt.nz<mailto:gaylett@kaipara.govt.nz> |
council@kaipara.govt.nz<mailto:council@kaipara.govt.nz> | www.kaipara.govt.nz<http://www.kaipara.govt.nz/>

[Values Banner (2)]

REJECTED ATTACHMENT(S):
Note: The listed file(s) below were rejected because they were not in PDF format.
- image001.jpg
- image002.jpg

ATTACHMENTS:

- 21150_PS4_Lot 3 760 Settlement Road Hakarua.pdf

Email #62428: BC210608

Project ID: 210608
Date Received: 2022-09-27 13:28:03
Sender: buildingsupport@kaipara.govt.nz
Checked By: John Edwards
Accepted By: John Edwards
Subject:
Information Received Via Email: FW: BC210608 - Producer Statement
Message:

From: Gina Utting <ginautting@kaipara.govt.nz>
Sent: Tuesday, 27 September 2022 10:13 AM
To: Building Support <buildingsupport@kaipara.govt.nz>
Subject: BC210608 - Producer Statement

Good Morning, please may this be loaded against the consent.

Ng? mihi

Gina

[cid:image001.jpg@01D8D259.A6FF4860]<http://www.kaipara.govt.nz/>
Gina Utting | Monitoring & Compliance Technical Support Officer
Kaipara te Oranganui | Kaipara District Council, Private Bag 1001, Dargaville 0340
Direct Dial: 09 4391123 | Freephone: 0800 727 059
Dargaville Office: 32 Hokianga Road, Dargaville 0310
Mangawhai Office: Unit 6, The Hub, 6 Molesworth Drive, Mangawhai 0505
Opening Hours: Monday, Tuesday, Thursday, Friday 8am to 4.30pm and Wednesday 9am to 4.30pm.
kdclicensing@kaipara.govt.nz<mailto:kdclicensing@kaipara.govt.nz> |
www.kaipara.govt.nz<http://www.kaipara.govt.nz/>

[cid:image002.jpg@01D8D259.A6FF4860]

REJECTED ATTACHMENT(S):
Note: The listed file(s) below were rejected because they were not in PDF format.
- image001.jpg

- image002.jpg

ATTACHMENTS:

- BC210608_752_Settlement_Road_Producer_Statement_plumber_pressure_test.pdf

Email #62431: BC210608

Project ID: 210608
Date Received: 2022-09-27 13:56:03
Sender: buildingsupport@kaipara.govt.nz
Checked By: Hannah Davies
Accepted By: John Edwards
Subject:
Information Received Via Email: FW: BC210608 - Producer Statement
Message:

[KDC Logo test June 2015]
Sharon Martin | Building Technical Support Officer
Kaipara te Oranganui | Kaipara District Council, Private Bag 1001, Dargaville 0340
Freephone: 0800 727 059 |
smartin@kaipara.govt.nz<mailto:smartin@kaipara.govt.nz> |
council@kaipara.govt.nz<mailto:council@kaipara.govt.nz> | www.kaipara.govt.nz<http://www.kaipara.govt.nz/>

From: Gina Utting <ginautting@kaipara.govt.nz>
Sent: Tuesday, 27 September 2022 10:13 AM
To: Building Support <buildingsupport@kaipara.govt.nz>
Subject: BC210608 - Producer Statement

Good Morning, please may this be loaded against the consent.

Ng? mihi

Gina

[cid:image001.jpg@01D8D259.A6FF4860]<http://www.kaipara.govt.nz/>
Gina Utting | Monitoring & Compliance Technical Support Officer
Kaipara te Oranganui | Kaipara District Council, Private Bag 1001, Dargaville 0340
Direct Dial: 09 4391123 | Freephone: 0800 727 059
Dargaville Office: 32 Hokianga Road, Dargaville 0310
Mangawhai Office: Unit 6, The Hub, 6 Molesworth Drive, Mangawhai 0505
Opening Hours: Monday, Tuesday, Thursday, Friday 8am to 4.30pm and Wednesday 9am to 4.30pm.
kdclicensing@kaipara.govt.nz<mailto:kdclicensing@kaipara.govt.nz> |
www.kaipara.govt.nz<http://www.kaipara.govt.nz/>

[cid:image002.jpg@01D8D259.A6FF4860]

REJECTED ATTACHMENT(S):

Note: The listed file(s) below were rejected because they were not in PDF format.

- image001.jpg
- image002.jpg
- image003.jpg

ATTACHMENTS:

- BC210608_752_Settlement_Road_Producer_Statement_plumber_pressure_test.pdf

Email #64821: BC210608

Project ID: 210608
Date Received: 2022-12-19 10:42:03
Sender: mailer-daemon@smtp.sitehost.co.nz
Checked By: Graeme Mager
Accepted By: Graeme Mager
Subject:
Information Received Via Email: Undelivered Mail Returned to Sender
Message:
This is the mail system at host smtp.sitehost.co.nz.

I'm sorry to have to inform you that your message could not
be delivered to one or more recipients. It's attached below.

For further assistance, please send mail to postmaster.

If you do so, please include this problem report. You can
delete your own text from the attached returned message.

The mail system

<russellswain@habitatdesign.co.nz>: Host or domain name not found. Name service
 error for namebitatdesign.co.nz type=A: Host not found
Reporting-MTA: dns; smtp.sitehost.co.nz
X-Postfix-Queue-ID: 784DF70127
X-Postfix-Sender: rfc822; 210608@kdc.abcs.co.nz
Arrival-Date: Mon, 19 Dec 2022 10:35:08 +1300 (NZDT)

Final-Recipient: rfc822; russellswain@habitatdesign.co.nz
Original-Recipient: rfc822;russellswain@habitatdesign.co.nz
Action: failed
Status: 5.4.4
Diagnostic-Code: X-Postfix; Host or domain name not found. Name service error
 for namebitatdesign.co.nz type=A: Host not found

Email #66954: BC210608

Project ID: 210608
Date Received: 2023-03-24 10:35:04
Sender: no-reply@abcs.co.nz
Checked By: Graeme Mager
Accepted By: Graeme Mager
Subject:
Information Received Via Email: BC210608: New Documents Uploaded
Message:

Attention: BC210608 Assigned Staff
There are new document(s) that have been uploaded on BC210608 and these are:

top_skirting_in_room_1.jpg.pdftop_skirting_in_room_2.jpg.pdftop_skirting_in_room_3.jpg.pdftop_skirting_in_room_4.jpg.pdffinishing_trims_interior_bathroom.jpg.pdfinternal_hardware_trim_fitted.jpg.pdffinsihing_trim_and_door_hardware_garage_to_sleepout.jpg.pdffinishing_trim_exterior_top_of_cladding_2_build_ground_levels_up.jpg.pdffinishing_trim_exterior_top_of_cladding_1.jpg.pdffinishing_trim_exterior_top_of_cladding_3_build_ground_levels_up.jpg.pdffinishing_trim_exterior_top_of_cladding_4_plus_build_ground_levels_up.jpg.pdffinishing_trim_to_garage_doors.jpg.pdfhot_water_cylinder.jpg.pdf

To view these documents, click the "Documents" button and accept them from there.
Generated by:AlphaOne Building Consent Systemwww.abcs.co.nz | www.alphaonebuildingconsent.comDate & Time: 24 March 2023, 10:31 am - Friday | Signature Hash: 2a7ea309c0dcc64d4344a4ff191f497072794aa0ATTENTION: Please do not reply to this email as the mailbox is unattended.
DISCLAIMER

This message is for the designated recipient(s) only, and may contain confidential and/or privileged information.
If you have received it in error, please delete it and advise the sender immediately.
You should not copy or use it for any other purpose, nor disclose its contents to any other person.

Designated Recipient(s): 210608@kdc.abcs.co.nz
Sent From: AlphaOne Building Consent System
Sent Date: 24 March 2023 10:31 - Friday

Email #67005: BC210608

Project ID: 210608
Date Received: 2023-03-27 14:35:05
Sender: no-reply@abcs.co.nz
Checked By: John Dowden
Accepted By: John Dowden
Subject:
Information Received Via Email: BC210608: New Documents Uploaded
Message:

Attention: BC210608 Assigned Staff
There are new document(s) that have been uploaded on BC210608 and these are:
COCESC_5218.1E243604.pdf

To view these documents, click the "Documents" button and accept them from there.
Generated by:AlphaOne Building Consent Systemwww.abcs.co.nz | www.alphaonebuildingconsent.comDate & Time: 27 March 2023, 2:31 pm - Monday | Signature Hash: 2963b9d73780477571c14e161934f777ce7faeb6ATTENTION: Please do not reply to this email as the mailbox is unattended.
DISCLAIMER

This message is for the designated recipient(s) only, and may contain confidential and/or privileged information.
If you have received it in error, please delete it and advise the sender immediately.
You should not copy or use it for any other purpose, nor disclose its contents to any other person.

Designated Recipient(s): 210608@kdc.abcs.co.nz
Sent From: AlphaOne Building Consent System
Sent Date: 27 March 2023 14:31 - Monday

Email #173265: BC210608

Project ID: 210608
Date Sent: 2021-09-09 13:06:06
Recipient: russellswain@habitatdesign.co.nz
Sender: Fay Fergus
Subject: BC210608: 752 Settlement Road Hakaru
Message:

Hello

Thank you for your Building Consent application. Attached is the invoice for BC210608. Please use BC210608 as reference when making payment.

Your application is being checked for completeness and will not be formally accepted until payment and any requested information has been received.

Please be aware that further charges for specialist input may apply if applicable. For example: Engineering calculations or structural engineering design (SED)
requires review by KDC contracting engineers since no processing officer is qualified to assess engineering calculations. This is the situation and practice of
many smaller Councils across the country. Simple SED (e.g. "SED beam, raft or waffle slab, etc") are able to be processed in-house.

If you require any further assistance, please do not hesitate to contact me.

Kind Regards

Fay Fergus
Building Technical Support
Kaipara District Council
Unit 6 - The Hub, 6 Molesworth Drive, Mangawhai 0505
P: (09) 439 3123 | E: buildingsupport@kaipara.govt.nz | W: www.kaipara.govt.nz

Email #173278: BC210608

Project ID: 210608
Date Sent: 2021-09-09 14:15:04
Recipient: russellswain@habitatdesign.co.nz
Sender: AlphaOne System
Subject: RE: Re: BC210608: 752 Settlement Road Hakaru
Message:

Hello

Thank you for your message regarding your application with Kaipara District Council. This is an automated response to confirm your message has been received by the assigned officer for review. You can expect a response within 5 working days.

For further information or enquiries please email 210608@kdc.abcs.co.nz.

Kind regards

Kaipara District Council
Unit 6 - The Hub
6 Molesworth Drive
Mangawhai 0505
www.kaipara.govt.nz

Email #173287: BC210608

Project ID: 210608
Date Sent: 2021-09-09 15:08:33
Recipient: russellswain@habitatdesign.co.nz
Sender: Fay Fergus
Subject:
BC210608.1 Request For Further Information - Vetting - 752 Settlement Road Hakaru
Message:
Hello Russell

Reference Number: BC210608
Project Location: 752 Settlement Road, Hakaru
Project Description: Proposed Separate Garage/Sleepout

Thank you for lodging your building consent application with the Kaipara District Council, the application has been reviewed for completeness in accordance with s45 of the Act. The attached letter details information which is required to be provided to enable your application to be formally receipted.

All information is to be supplied within 28 days (or the application may be refused). Please keep us informed if additional time is required.

So that your information gets to us as promptly as possible, please:

- ensure you reply directly to this email;
- only provide information specifically relating to this project;
- all attachments must be saved in PDF format;

By doing this you will keep your project moving as the information will be delivered directly to the processor. To speed up processing we would request that changes to plans are marked using the "cloud" convention - thank you for helping us to help you!

If you do not receive the automated reply confirmation from Kaipara District Council for the info sent then Kaipara District Council has not received your information.

Kind Regards

Fay Fergus
Building Technical Support

Kaipara District Council
Unit 6 - The Hub, 6 Molesworth Drive, Mangawhai 0505
P: (09) 439 3123 | E: buildingsupport@kaipara.govt.nz | W: www.kaipara.govt.nz

Email #173563: BC210608

Project ID: 210608
Date Sent: 2021-09-13 15:15:10
Recipient: russellswain@habitatdesign.co.nz
Sender: AlphaOne System
Subject:
RE: Re: BC210608.1 Request For Further Information - Vetting - 752 Settlement Road Hakaru
Message:
Hello

Thank you for your message regarding your application with Kaipara District Council. This is an automated response to confirm your message has been received by the assigned officer for review. You can expect a response within 5 working days.

We accept email attachments in PDF, JPG and PNG format.

ACCEPTED ATTACHMENTS:
- 210456_CT_20210706.pdf (202.99kB)
- BC Dwgs for Utting Owens.PDF (8.16MB)
- H1 calculation. GUtting.PDF (1.59MB)

For further information or enquiries please email 210608@kdc.abcs.co.nz.

Kind regards

Kaipara District Council
Unit 6 - The Hub
6 Molesworth Drive
Mangawhai 0505
www.kaipara.govt.nz

Email #173578: BC210608

Project ID: 210608
Date Sent: 2021-09-13 16:09:56
Recipient: ffergus@kaipara.govt.nz
Sender: John Dowden
Subject: BC210608: A new email has been allocated to you
Message:

Hello Fay Fergus,

A new email for BC210608 has been allocated to you. Please check and take appropriate action.

https://kdc.abcs.co.nz/jobs/210608/communication/?optilbox

— AlphaOne System

Email #173607: BC210608

Project ID: 210608
Date Sent: 2021-09-14 07:54:46
Recipient: russellswain@habitatdesign.co.nz
Sender: Fay Fergus
Subject: BC210608: 752 Settlement Road Hakaru
Message:

Hello Russell

Thank you for your email and information. Once payment has been received and allocated I can forward the application to the Processing Team.

If you require any further assistance, please do not hesitate to contact me.

Kind Regards

Fay Fergus
Building Technical Support
Kaipara District Council
Unit 6 - The Hub, 6 Molesworth Drive, Mangawhai 0505
P: (09) 439 3123 | E: buildingsupport@kaipara.govt.nz | W: www.kaipara.govt.nz

==========

Hello Fay,
Thank you for your email. The $2748.75 deposit/fee has been paid online.
Please refer attached for:

- Certificate of Title with Consent Notice.
- Floor Plan/Sheet 3 of attached set noting smoke alarm "S"
- Floor Plan/sheet 3 noting hwc and restraint detail.
- H1 Compliance by Schedule Method. Please refer to the calculation attached.

Please note I have amended sheet 3 noting the hwc and restraint detail and this full set is the most up to date for the application.

Any further queries please dont hesitate to contact me.
Kind Regards
Russell Swain

On Thu, Sep 9, 2021 at 3:08 PM Kaipara District Council wrote:

> Hello Russell
>
>
> Reference Number: BC210608
> Project Location: 752 Settlement Road, Hakaru
> Project Description: Proposed Separate Garage/Sleepout
>
> Thank you for lodging your building consent application with the Kaipara
> District Council, the application has been reviewed for completeness in
> accordance with s45 of the Act. The attached letter details information
> which is required to be provided to enable your application to be formally
> receipted.
>
> All information is to be supplied within 28 days (or the application may
> be refused). Please keep us informed if additional time is required.
>
> So that your information gets to us as promptly as possible, please:
>
> - ensure you reply directly to this email;
> - only provide information specifically relating to this project;
> - all attachments must be saved in PDF format;
>
> By doing this you will keep your project moving as the information will be
> delivered directly to the processor. To speed up processing we would
> request that changes to plans are marked using the "cloud" convention -
> thank you for helping us to help you!
>
> If you do not receive the automated reply confirmation from Kaipara
> District Council for the info sent then Kaipara District Council has not
> received your information.
>
> Kind Regards
>
>
>
> Fay Fergus
> Building Technical Support
> Kaipara District Council

> Unit 6 - The Hub, 6 Molesworth Drive, Mangawhai 0505
> P: (09) 439 3123 | E: buildingsupport@kaipara.govt.nz | W:
> www.kaipara.govt.nz
>
>
> ------------------------------
>
> *DISCLAIMER*
>
>
> This message is for the designated recipient(s) only, and may contain
> confidential and/or privileged information.
> If you have received it in error, please delete it and advise the sender
> immediately.
> You should not copy or use it for any other purpose, nor disclose its
> contents to any other person.
>
>
> Designated Recipient(s): russellswain@habitatdesign.co.nz
>
> Sent From: AlphaOne Building Consent System
>
> Sent Date: 9 September 2021 15:08 - Thursday
>
>

Email #173629: BC210608

Project ID: 210608
Date Sent: 2021-09-14 09:30:06
Recipient: russellswain@habitatdesign.co.nz
Sender: AlphaOne System
Subject: Application Accepted
Message:

Dear Russell Swain,

Your application for Building Consent only with reference code 40615441CQ has passed the Section 45 check and has been lodged with Kaipara District Council.

If you entered an electronic application you can track its progress on the customer portal https://consents-kdc.abcs.co.nz/.

You may receive emails regarding your application from time to time.

Regards,

Kaipara District Council
Phone: (09) 439 3123
Email: buildingsupport@kaipara.govt.nz

Email #173824: BC210608

Project ID: 210608
Date Sent: 2021-09-15 14:31:42
Recipient: russellswain@habitatdesign.co.nz
Sender: Matthew Bayly
Subject:
BC210608.1 Form 4: Certificate attached to PIM - 752 Settlement Road Hakaru
Message:
Hi,

Please see attached a Form 4 for this project.

Reference Number: BC210608.1

Form 4: Certificate attached to PIM

Matthew Bayly
Planning Team
Kaipara District Council
Unit 6 - The Hub, 6 Molesworth Drive, Mangawhai 0505
P: (09) 439 3123 | E: buildingsupport@kaipara.govt.nz | W: www.kaipara.govt.nz

Email #173959: BC210608

Project ID: 210608
Date Sent: 2021-09-16 15:40:09
Recipient: russellswain@habitatdesign.co.nz
Sender: AlphaOne System
Subject:
RE: Re: BC210608.1 Form 4: Certificate attached to PIM - 752 Settlement Road Hakaru
Message:
Hello

Thank you for your message regarding your application with Kaipara District Council. This is an automated response to confirm your message has been received by the assigned officer for review. You can expect a response within 5 working days.

We accept email attachments in PDF, JPG and PNG format.

ACCEPTED ATTACHMENTS:
- Temp00744.PDF (1.55MB)

For further information or enquiries please email 210608@kdc.abcs.co.nz.

Kind regards

Kaipara District Council
Unit 6 - The Hub
6 Molesworth Drive
Mangawhai 0505
www.kaipara.govt.nz

Email #173985: BC210608

Project ID: 210608
Date Sent: 2021-09-17 08:37:00
Recipient: mbayly@kaipara.govt.nz
Sender: Greg Bellam
Subject: BC210608: A new email has been allocated to you
Message:

Hello Matthew Bayly,

A new email for BC210608 has been allocated to you. Please check and take appropriate action.

https://kdc.abcs.co.nz/jobs/210608/communication/?optilbox

— AlphaOne System

Email #174021: BC210608

Project ID: 210608
Date Sent: 2021-09-17 10:17:12
Recipient: russellswain@habitatdesign.co.nz
Sender: Matthew Bayly
Subject: BC210608: 752 Settlement Road Hakaru
Message:

Morning,

Thanks for these, I have removed the Form 4 requirement.

Matthew Bayly
Planning Team
Kaipara District Council
Unit 6 - The Hub, 6 Molesworth Drive, Mangawhai 0505
P: (09) 439 3123 | E: buildingsupport@kaipara.govt.nz | W: www.kaipara.govt.nz

==========

Hello Matthew,
My apologies please find attached the floor plan and site plan where the
sink has been deleted.
Kind Regards
Russell Swain

On Wed, Sep 15, 2021 at 2:31 PM Kaipara District Council wrote:

> Hi,
>
> Please see attached a Form 4 for this project.
>
>
> Reference Number: BC210608.1
>
> Form 4: Certificate attached to PIM
>
>
> Matthew Bayly
> Planning Team

> Kaipara District Council
> Unit 6 - The Hub, 6 Molesworth Drive, Mangawhai 0505
> P: (09) 439 3123 | E: buildingsupport@kaipara.govt.nz | W:
> www.kaipara.govt.nz
>
>
> ----------
>
> *DISCLAIMER*
>
>
> This message is for the designated recipient(s) only, and may contain
> confidential and/or privileged information.
> If you have received it in error, please delete it and advise the sender
> immediately.
> You should not copy or use it for any other purpose, nor disclose its
> contents to any other person.
>
>
> Designated Recipient(s): russellswain@habitatdesign.co.nz
>
> Sent From: AlphaOne Building Consent System
>
> Sent Date: 15 September 2021 14:31 - Wednesday
>
>

Email #174046: BC210608

Project ID: 210608
Date Sent: 2021-09-17 11:52:28
Recipient: vsingh@kaipara.govt.nz
Sender: Kerry Hewson
Subject: BC210608: A new job for you
Message:

Hello Vikrant Singh,

BC210608 has been allocated to you. Please check and take appropriate action.

https://kdc.abcs.co.nz/jobs/210608

— AlphaOne System

Email #174434: BC210608

Project ID: 210608
Date Sent: 2021-09-22 17:15:04
Recipient: simon@magmaenterprises.co.nz
Sender: Simon Johnson
Subject: Specialist Input Requested - 22 Sep 2021
Message:

Hello Simon Johnson!

Specialist input has been requested on the following:

BC Number: BC210581
Building: Main Building
Question(s):
G13: Foul Water: Does the proposal comply with G13.2 and demonstrate that buildings in which sanitary fixtures and sanitary appliances using water-borne waste disposal are installed will be provided with: (a) an adequate plumbing and draining system to carry foul water to appropriate outfalls, and (b) if no sewer is available, an adequate system for the storage, treatment, and disposal of foul water?
Notes: Hi Simon,

Hope your well,

Onsite Sewer disposal for review please.

BC Number: BC210608
Building: Main Building
Question(s):
G13: Foul Water: Does the proposal comply with G13.2 and demonstrate that buildings in which sanitary fixtures and sanitary appliances using water-borne waste disposal are installed will be provided with: (a) an adequate plumbing and draining system to carry foul water to appropriate outfalls, and (b) if no sewer is available, an adequate system for the storage, treatment, and disposal of foul water?
Notes: Hi Simon,

Could you please look into the wastewater disposal system for this consent - 210608.

Kind Regards,

Vikrant

Click the link to log in to your Dashboard: http://kdc.abcs.co.nz/dashboard/

Generated by:
AlphaOne Building Consent System
www.abcs.co.nz | www.alphaonebuildingconsent.com
Date & Time: 22 September 2021, 5:15 pm - Wednesday | Signature Hash:
7d72b3f472811db23439f12a6bbeffca378eeeed

Email #174610: BC210608

Project ID: 210608
Date Sent: 2021-09-24 11:52:34
Recipient:
ginautting@gmail.com, russellswain@habitatdesign.co.nz
Sender: Vikrant Singh
Subject:
BC210608.1 Request For Further Information - 752 Settlement Road Hakaru
Message:
Dear Sir/Madam,

Reference Number: BC210608
Project Location: 752 Settlement Road, Hakaru
Project Description: Proposed Separate Garage/Sleepout

Processing of your building consent application in accordance with s48 of the Building Act is currently in progress. The attached letter details information which is required to be provided to demonstrate that the proposed work will comply with s 48 of the NZ Building Act and Regulations. Please note that the processing time clock has been suspended pending this information.

So that your information gets to us as promptly as possible, please:
- ensure you reply directly to this email and the format of our email address must be in full as follows: 210608@kdc.abcs.co.nz
- provide only the information that specifically relates to this project;
- ensure that all attachments are saved in PDF format;

Following the above will keep your project moving and ensure the information is delivered directly to the processor. To speed up processing we would request that changes to plans are marked using the "cloud" convention - thank you for helping us to help you!

Kind Regards,

Vikrant Singh
Building Services Officer
Kaipara District Council
Unit 6 - The Hub, 6 Molesworth Drive, Mangawhai 0505
P: (09) 439 3123 | E: buildingsupport@kaipara.govt.nz | W: www.kaipara.govt.nz

Email #174826: BC210608

Project ID: 210608
Date Sent: 2021-09-28 13:25:04
Recipient: russellswain@habitatdesign.co.nz
Sender: AlphaOne System
Subject: RE: BC210608 , 752 Settlement Road, Hakaru
Message:

Hello

Thank you for your message regarding your application with Kaipara District Council. This is an automated response to confirm your message has been received by the assigned officer for review. You can expect a response within 5 working days.

We accept email attachments in PDF, JPG and PNG format.

ACCEPTED ATTACHMENTS:
- 752 Settlement Rd.28.9.21.PDF (1.63MB)
- Rheem HWC.pdf (582.81kB)

For further information or enquiries please email 210608@kdc.abcs.co.nz.

Kind regards

Kaipara District Council
Unit 6 - The Hub
6 Molesworth Drive
Mangawhai 0505
www.kaipara.govt.nz

Email #174859: BC210608

Project ID: 210608
Date Sent: 2021-09-28 15:55:19
Recipient: russellswain@habitatdesign.co.nz
Sender: Sharon Martin
Subject: BC210608.1 PIM - 752 Settlement Road Hakaru
Message:

Dear Sir/Madam,

Reference Number: BC210608.1

PIM

Attached is a copy of the issued Project Information Memorandum (PIM)

This is not approval to build.

If you have any questions regarding the attached documents please contact the Planning Team at rmaconsents@kaipara.govt.nz

Consent Notice 12086992.2
Please ensure all / any consent notices pertaining to this site have been complied with before starting any building work.
The Council recommends that you seek your own legal advice in relation to any breach/es of the consent notice, and the potential consequences of this.

Kind regards
Sharon Martin

Kaipara District Council
Unit 6 - The Hub, 6 Molesworth Drive, Mangawhai 0505
P: (09) 439 3123 | E: buildingsupport@kaipara.govt.nz | W: www.kaipara.govt.nz

Email #174912: BC210608

Project ID: 210608
Date Sent: 2021-09-29 08:09:47
Recipient:
ginautting@gmail.com, russellswain@habitatdesign.co.nz
Sender: Vikrant Singh
Subject:
BC210608.1 Form 5: Building Consent - 752 Settlement Road Hakaru
Message:
Dear Sir/Madam,

Please see your attached Issued Building Consent.

I have uploaded the documents for you, you can find them via the Alpha Portal at https://consents-kdc.abcs.co.nz/ - log into your account, go to 'My Applications, click on 'BC', click on 'Documents', click on 'View Documents Issued'.

Please ensure that a copy of all plans, specifications and supporting documents are printed and available on site at all times.

For any further information send your enquiry to 210608@kdc.abcs.co.nz

Kind Regards,

Vikrant Singh
Building Services Officer
Kaipara District Council
Unit 6 - The Hub, 6 Molesworth Drive, Mangawhai 0505
P: (09) 439 3123 | E: buildingsupport@kaipara.govt.nz | W: www.kaipara.govt.nz

Email #175561: BC210608

Project ID: 210608
Date Sent: 2021-10-06 10:41:15
Recipient:
ginautting@gmail.com, russellswain@habitatdesign.co.nz
Sender: Greg Bellam
Subject: BC210608 Inspection Report
Message:
Our inspection team have carried out a site inspection on the above project today, please find attached the inspectors site notice for your information.

If you have any queries regarding the content of the site notice please contact the inspector on phone 0800 727 059.

Email #175562: BC210608

Project ID: 210608
Date Sent: 2021-10-06 10:41:20
Recipient:
ginautting@gmail.com, russellswain@habitatdesign.co.nz
Sender: Greg Bellam
Subject: BC210608 Inspection Report
Message:
Our inspection team have carried out a site inspection on the above project today, please find attached the inspectors site notice for your information.

If you have any queries regarding the content of the site notice please contact the inspector on phone 0800 727 059.

Email #195618: BC210608

Project ID: 210608
Date Sent: 2022-05-18 09:43:06
Recipient: ginautting@gmail.com
Sender: Aaron Brown
Subject: BC210608 Inspection Report
Message:

Our inspection team have carried out a site inspection on the above project today, please find attached the inspectors site notice for your information.

If you have any queries regarding the content of the site notice please contact the inspector on phone 0800 727 059.

Email #200883: BC210608

Project ID: 210608
Date Sent: 2022-07-08 10:32:06
Recipient: ginautting@gmail.com
Sender: John Dowden
Subject: BC210608 Inspection Report
Message:

Our inspection team have carried out a site inspection on the above project today, please find attached the inspectors site notice for your information.

If you have any queries regarding the content of the site notice please contact the inspector on phone 0800 727 059.

Email #201198: BC210608

Project ID: 210608
Date Sent: 2022-07-12 11:23:08
Recipient: ginautting@gmail.com
Sender: Greg Bellam
Subject: BC210608 Inspection Report
Message:

Our inspection team have carried out a site inspection on the above project today, please find attached the inspectors site notice for your information.

If you have any queries regarding the content of the site notice please contact the inspector on phone 0800 727 059.

Email #207570: BC210608

Project ID: 210608
Date Sent: 2022-09-15 15:37:13
Recipient: ginautting@gmail.com
Sender: John Edwards
Subject: BC210608 Inspection Report
Message:

Our inspection team have carried out a site inspection on the above project today, please find attached the inspectors site notice for your information.

If you have any queries regarding the content of the site notice please contact the inspector on phone 0800 727 059.

Email #208857: BC210608

Project ID: 210608
Date Sent: 2022-09-30 15:18:02
Recipient: jedwards@kaipara.govt.nz
Sender: Greg Bellam
Subject: BC210608: A new email has been allocated to you
Message:

Hello John Edwards,

A new email for BC210608 has been allocated to you. Please check and take appropriate action.

https://kdc.abcs.co.nz/jobs/210608/communication/?optilbox

— AlphaOne System

Email #208858: BC210608

Project ID: 210608
Date Sent: 2022-09-30 15:18:14
Recipient: jedwards@kaipara.govt.nz
Sender: Greg Bellam
Subject: BC210608: A new email has been allocated to you
Message:

Hello John Edwards,

A new email for BC210608 has been allocated to you. Please check and take appropriate action.

https://kdc.abcs.co.nz/jobs/210608/communication/?optilbox

— AlphaOne System

Email #213227: BC210608

Project ID: 210608
Date Sent: 2022-11-17 12:30:06
Recipient: ginautting@gmail.com
Sender: Greg Bellam
Subject: BC210608 Inspection Report
Message:

Our inspection team have carried out a site inspection on the above project today, please find attached the inspectors site notice for your information.

If you have any queries regarding the content of the site notice please contact the inspector on phone 0800 727 059.

Email #215975: BC210608

Project ID: 210608
Date Sent: 2022-12-19 10:35:10
Recipient:
ginautting@gmail.com, russellswain@habitatdesign.co.nz
Sender: Graeme Mager
Subject: BC210608 Inspection Report
Message:
Our inspection team have carried out a site inspection on the above project today, please find attached the inspectors site notice for your information.

If you have any queries regarding the content of the site notice please contact the inspector on phone 0800 727 059.

Email #216140: BC210608

Project ID: 210608
Date Sent: 2022-12-20 08:58:19
Recipient: gmager@kaipara.govt.nz
Sender: Greg Bellam
Subject: BC210608: A new email has been allocated to you
Message:

Hello Graeme Mager,

A new email for BC210608 has been allocated to you. Please check and take appropriate action.

https://kdc.abcs.co.nz/jobs/210608/communication/?optilbox

— AlphaOne System

Email #223286: BC210608

Project ID: 210608
Date Sent: 2023-03-24 15:58:16
Recipient: gmager@kaipara.govt.nz
Sender: John Dowden
Subject: BC210608: A new email has been allocated to you
Message:

Hello Graeme Mager,

A new email for BC210608 has been allocated to you. Please check and take appropriate action.

https://kdc.abcs.co.nz/jobs/210608/communication/?optilbox

— AlphaOne System

Email #223304: BC210608

Project ID: 210608
Date Sent: 2023-03-26 18:07:43
Recipient: ginautting@gmail.com
Sender: Graeme Mager
Subject: BC210608: 752 Settlement Road Hakaru
Message:

Hi,

After reviewing this BC, the outstanding documents are as follows:
-Electrical COC - energy works certificate
-CCC application
I have received the photos of requested items, please ensure all trims are paint finished/top coated like cladding has been.
Once I have received the requested documents above CCC can then be issued.

Kind regards

Graeme Mager
Building Services Officer
Kaipara District Council
Unit 6 - The Hub, 6 Molesworth Drive, Mangawhai 0505
P: (09) 439 3123 | E: buildingsupport@kaipara.govt.nz | W: www.kaipara.govt.nz

Email #223368: BC210608

Project ID: 210608
Date Sent: 2023-03-27 13:00:13
Recipient: ginautting@gmail.com
Sender: System
Subject: Online Code Compliance Certificate Application
Message:

Hello Gina Utting,

Please find attached a copy of the information you have submitted to Kaipara District Council. We will process your application electronically and email you if we require additional information.

Should you have any queries regarding your application please reply to this email or call our Building Services Team on 09 439 3123.

— Kaipara District Council

Email #223427: BC210608

Project ID: 210608
Date Sent: 2023-03-27 16:31:28
Recipient: ginautting@gmail.com
Sender: Graeme Mager
Subject:

BC210608 Form 7: Code Compliance Certificate - 752 Settlement Road Hakaru

Message:

Dear Sir/Madam,

Reference Number: BC210608

Form 7: Code Compliance Certificate

Graeme Mager
Building Services Officer
Kaipara District Council
Unit 6 - The Hub, 6 Molesworth Drive, Mangawhai 0505
P: (09) 439 3123 | E: buildingsupport@kaipara.govt.nz | W: www.kaipara.govt.nz